Box NR 20

10-8 (1/2)

SHIP DESIGN OFFICE DESIGN DEP'T 2	SHIP TYPE 4,150 TEU CLASS CONTAINER CARRIER
S/P NO. 1630	SHIP NAME **MAERSK GREENOCK (IMO 9298686)**
Y. S. HAN C. K. LEE	NAME OF DRAWING TUNNEL THRUSTER (1/2)
DATE 2005.10.13	SCALE / | DRAWING NO. 6J-7116-001
HYUNDAI HEAVY INDUSTRIES CO.,LTD ULSAN SHIPYARD, KOREA	CONSOLIDATED NO. IO-8

IMO 9298686
HHI 1630

KAWASAKI

Vessel's Name " MAERSK GREENOCK "

HYUNDAI HEAVY INDUSTRIES CO.,LTD.
S.No.H1630

KAWASAKI SIDE THRUSTER

KT-157B3 TYPE

FINISHED PLAN

DELIVERY	
YARD	5
KPME工務	
KPME工事	1
検　査	
控	1
ISSUE	

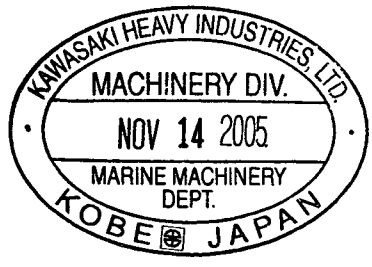

KAWASAKI
HEAVY INDUSTRIES, LTD.
MACHINERY DIVISION
MARINE MACHINERY DEPARTMENT

【 ORDER NO. 31KB068 】

A

SIDE THRUSTER

1. TYPE : KT-157B3

2. MACHINE NO. : 3426

CONTENTS

1. TECHNICAL SPECIFICATION & DRAWINGS
2. TECHNICAL DATA
3. INSTRUCTION BOOK
4. REMOTE CONTROL SYSTEM
5. MAIN MOTOR
6. STARTER PANEL
7. SPARE PARTS & SPECIAL TOOLS
8. TEST AND INSPECTION REPORT

TECHNICAL SPECIFICATION & DRAWINGS

OF

KAWASAKI SIDE THRUSTER

KT-157B3

FOR

4,150TEU Class Container Carrier

HYUNDAI HEAVY INDUSTRIES CO.,LTD.
S.No.H1630/1,1671/2,1699-1701,1733

DELIVERY	
YARD	
KPME 工務	
KPME 工事	
工務	
組立	
検査	
控	1
ISSUE	

ORDER NO.
31KB068 ,70,72,74,76,78,80,82

NOTES

REVISION
R1: Followed by yard's approval comments.
Apr 25 2005 M.I, M.O, F.H

DATE
November 24, 2004

KAWASAKI
HEAVY INDUSTRIES, LTD.

GAS TURBINE & MACHINERY COMPANY
MACHINERY DIVISION
MARINE MACHINERY DEP'T.
PROPULSION MACHINERY ENG'NG SECT.

APPROVED T. Harada

CHECKED M Okuda

DRAWN M. Ishihara

DRAWING NO.
G4-001-254 R1

(SHEETS COVER INC)

I. General

1. Customer : HYUNDAI HEAVY INDUSTRIES CO.,LTD.
2. Ship Owner : A.P.Moller
3. Shipyard : HYUNDAI HEAVY INDUSTRIES CO.,LTD.
   S.No.H1630/1,1671/2,1699-1701,1733
4. Kind of ship : 4,150TEU Container Carrier ⚠1
5. Hull dimension : Lpp x B x D x d = 277 x 32.25 x 21.7 x 12.2 m
6. Ship speed (Service) : abt. 24.5 kt. ⚠1
7. Classification : LR
8. Installation position : Bow

II. Particulars

1. Thruster unit

Type	: KT – 157B3 Controllable Pitch type with motor base
Number of units	: 1 unit/vessel
Propeller diameter	: 2200 mm (skewed type) x 4 blades
Thrust	: abt. 196 kN {abt. 20.0 ton}
Propeller speed	: 315 r/min
Input shaft speed	: 1160 r/min
Input power	: 1335 kW
Direction of input shaft rotation	: Counter clockwise view from prime mover
Position of propeller blade	: Port side ⚠1

2. Prime mover and control device

2-1 Main motor

Type	: 3 phase, totally enclosed, vertical type squirrel cage induction motor (IP44)
Number of units	: 1 unit/vessel
Output	: 1335 kW
Revolution number	: 1200 r/min (synchronous speed)
Voltage x Frequency	: AC 3ϕ 3,300 V 60 Hz
Rating	: 30 min.
Rating Current	: abt. 284 Amp
Insulation	: F class
Starting method	: Auto transformer with 50 % tap
Accessories	: -One (1) set, space heater, element type AC 220V x 60 Hz x 400 W x 1ph -One (1) set, temperature sensor, Pt100, for each phase Notice: Monitoring system to be supplied by Shipyard. -Two(2) sets, PTC thermisters with relays for high temperature alarm & trip to be installed in the starter.

2-2 Motor control device ⚠1

Type	: self-standing type starter(IP44)
Number of units	: 1 units/vessel; including, hyd. pump motor starter

Power source ⚠ : AC 3φ 3,300 V 60 Hz for power source of thruster motor,
AC 3φ 220 V 60 Hz for control (transformed in starter),
AC 3φ 220 V 60 Hz for space heater(transformed in starter),
AC 3φ 440 V 60 Hz for power source of hyd. pump motor

Accessory : 1) Local control box(IP56)
2) Emergency stop button for main motor

3. Hydraulic unit : Floor mounting type x 1 unit/vessel

3-1 Oil service pump : Vertical screw type x 1 set/unit
41.4 lit/min x 4.5 MPa {46 kgf/cm^2} x 3500 r/min

3-2 Accessory/unit : DC solenoid valve (1), Pressure switch (2), Safety valve (1), Suction filter (1)

3-3 Driving motor

Type : Totally enclosed induction motor (IP44) x 1 set/unit
AC 3φ 440 V 60 Hz 5.5 kW x 3600 r/min(sync speed)
with space heater(winding type, 15V×2.6A x 1ph)

4. Flexible coupling : SF coupling 1130T-10 x 1 set/vessel
including a mating coupling for main motor

5. Gravity tank : Cylindrical wall mounting type x 1 unit/vessel
including level switch (1set, 2 contacts), Level gauge (1)
Volume : 80 Lit.

6. Remote control system

Type : Electric-hydraulic, follow-up control type

Control position

Wheel house : Master control device x 1 set/vessel
Flush panel mounting type

Wings : Wing control device x 2 sets/vessel
Flush panel mounting type (IP56)

Additional circuit : Over Load Protection device

Power supply : AC 1φ 220 V 60 Hz
DC 24 V as back up source for indicating system

7. Mass per unit

Thruster unit (dry)	: abt.	8600	kg	
Prime mover	: abt.	5800	kg	
Thruster starter	: abt.	1700	kg	⚠
Hydraulic unit	: abt.	260	kg	
Flexible coupling	: abt.	91	kg	
Gravity tank (dry)	: abt.	80	kg	
Accessory	: abt.	50	kg	

III. Testing and Inspection

1. All inspections are to be executed in accordance with the rules of the classification society and the standard of Kawasaki Heavy Industries, Ltd.
   Only the shop test is to be carried out in the presence of the surveyor of the classification society and the purchaser's representative.
   If the purchaser's representative cannot attend the test, responsibility of acceptance is to be entrusted to the K.H.I's inspector.
2. Statically momental balance test is individually carried out for the propeller blade.
3. Functional test of pitch control mechanical system is carried out with fully assembled thruster. Rotational test is not carried out in KHI's work shop.

IV. Dispatch of a service engineer for technical guidance

Our service engineer will attend at the adjusting and checking of the thruster system before sea trial and also at the sea trial as a supervisor subject to the payment of the extra charge by the shipyard when required.

V. Guarantee

This company hold itself responsible for any trouble that has risen within 12 months after the ship is delivered but not later than 18 months after the date of the delivery of the thruster to the customer and when such trouble is found attributable to the defect in design, or to the defect of the material used, or to the poor workmanship, this company will provide the parts necessary for a repair free of charge.

This company, however, will not hold responsible for any damage which is caused by the act of God or which is due to ordinary tear and wear, or mishandling on the part of the operator.

This company also will not hold itself responsible for any consequential or indirect loss which is brought about by damage of any nature whatsoever.

VI. Structure

The side thruster is specially designed in sufficient strength to withstand vibration and corrosion.

Most of the mechanisms for the pitch control are conveniently laid out inside the vessel, thus offering higher accessibility, safety and reliability.

The specially designed structure also permits easy overhaul and reassembly of the unit as well as trouble-free maintenance.

1. Side thruster unit

1-1 Controllable pitch propeller

Power is transmitted from the prime mover through the flexible coupling, input shaft, bevel gears to the propeller shaft, rotating the propeller in a constant direction.

The propeller part consists of four propeller blades, a propeller hub with a hydraulic servomotor and the sliding block mechanism.

The propeller blades are connected to blade carriers by blade bolts and this assures easy exchange of blades in the thruster tunnel.

The gear case, which carries propeller parts, is connected to the thruster tube by bolts and this assures easy overhauling all parts inside tube.

Pressurized oil from the solenoid valve is fed to the hydraulic servomotor through the pipes in the propeller shaft, resulting in the reciprocal movement of the servomotor piston.

This movement of the piston is converted into rotary movement of the blades by the sliding block mechanism.

Shaft sealing mechanism, which is attached to the gear case, is adopted for the propeller shaft.

The propeller blades are carefully designed with proper area and thickness to have sufficient strength and to withstand cavitation.

1-2 Lubricating device

The bevel gear and all the bearings inside the gear case are lubricated by the bath lubricating method.

Furthermore, the lubrication oil in the gear case is slightly pressurized by the connection with the gravity tank which is provided above the water surface to prevent sea water from leaking in.

2. Remote control system

2-1 Propeller pitch controlling

The pitch controlling device consist of a hydraulic unit(including solenoid valve) and a remote control device.

The control system is of the electric remote control type and a master control panel is provided for bridge console.

The system is so designed that the Follow-up control by a control dial on the control panel is possible.

The propeller pitch is automatically controlled to reduce the pitch sensing the load of main motor for protection from overload operation.

2-2 Remote motor controlling

1) One set operation switch is provided on the master control panel so that starting of all necessary equipment, such as oil service pump and main motor, is made from the bridge.

Stopping of all thruster equipment is made by the same switch from the master control panel.

2) Following contacts are provided for the prime mover start interlock

a) Gravity tank oil level : Normal close, open at low level

b) Control oil pressure : Normal close, open at low pressure

c) Blade angle : Close at pitch neutral zone (AB : +3° ~ -3°)

VII. Materials for main parts

Propeller blades	: Ni-Aluminium bronze casting
Propeller hub	: High strength brass casting
Propeller shaft	: Carbon steel forging
Spiral bevel wheel	: Alloy steel
Input shaft	: Alloy steel
Tube	: Rolled steel plate specified by the Rule and stainless steel (SUS316) in way of propeller tip △1
Gear case	: Ductile iron casting

VIII. Extent of supply

1. Side thruster unit (including companion flanges for piping) 1 set / vessel
   Anodes to be provided and fitted by Shipyard.
2. Flexible coupling 1 set / vessel
3. Hydraulic unit 1 unit / vessel
4. Gravity tank with level switch 1 set / vessel
5. Hand pump 1 pc / vessel
6. Main motor 1 set / vessel
7. Oil service pump motor 1 set / vessel
8. Motor control device(including control circuit of the pump motor) 1 set / vessel
9. Remote control system
   The following parts are individually supplied by K.H.I. and assembled on bridge console by Shipyard.

A) Master control panel provided with following parts 1 set / vessel

Type : Flush panel mounting, printed text type Q'ty/panel

a) Operation

1) Follow-up pitch control dial with lever ⚠1 1 set
2) Non follow-up control button (Port - Stbd) 1 set
3) Operation switch with indication 1 set
   - Cont. power OFF : Power & System OFF
   - Cont. power ON : Power & System ON (With Indication lamp)
   - Pump Stop : Hyd. oil pump's motor and fan's motor stop
   - Pump Run : Hyd. oil pump's motor and fan's motor run
   - Thruster Stop : Stop main motor
   - Thruster Run : Start main motor
4) Control mode change-over switch and indication 1 set
   - Non follow up : Non follow up control mode
   - Follow up : Follow up control mode
5) Pitch control position change-over switch and indication 1 set
   - W/H : Wheel house control
   - Wing : Wing control
6) Panel control switch 1 set
   - Dark and bright : Control panel illumination
   - Lamp buzzer test
   - Buzzer stop
7) Emergency stop button 1 set
8) Thruster Request (equal to Power Request) push button 1 set

b) Indicator 1 set

- Pitch indicator with LED lighting
- Load indicator (Percentage indication)

c) Indication lamps ⚠1 6

1) Main source ON (3300V)
2) Hyd oil pump source ON
3) Power available
4) Main motor full load
5) Ready to start
6) Bow th. room fan run

d) Alarm lamp 12

1) AC source failure
2) DC source failure
3) Controller abnormal
4) Low oil level (at the gravity tank)
5) Low pressure (at the hydraulic syste)
6) Oil service pump overload
7) Main motor overload
8) Main motor trip
9) Main motor high temperature
10) Main motor Insulation low
11) Auto pitch reduct. (at main motor trip and generator overload)

⚠1 12) Bow th room Fal fail

B) Terminal board unit 1 set / vessel

- Type: Open chassis type, to be installed in the bridge console by Shipyard.
- Accessory: 2 meter length flat cable, to connect with master control panel.

C) Wing control panel (IP56) 2 sets / vessel

- Type : Flush mounting type
- Provision ; Q'ty/box

1) Follow-up pitch control dial with lever ⚠1 1
2) Pitch indicator 1
3) Pitch control position change over confirm. button 1
4) System abnormal alarm lamp 1
5) Integrated alarm lamp 1
6) Main motor emergency stop button 1
7) Alarm buzzer 1
8) Buzzer stop button 1
9) Lamp & buzzer test button 1
10) Dimmer switch for lamps and indicators 1 set

D) Pitch transmitter with blade angle scale, mounted on the thruster unit 1 set / vessel

E) Signal supply to VDR 1 set / vessel

1) Pitch order signal (PORT 25° ~ STB'D 25°) 1
(Through RS-422 serial communication)
2) Actual pitch signal (PORT 25° ~ STB'D 25°) 1
(Through RS-422 serial communication)

10. Spare parts and tools

1) Packings and O-rings	each kind of one unit	1 set / vessel
2) Tools and parts for electric system		1 set / vessel
3) Special tools		1 set / vessel

IX. Coating and color ⚠1

1. Tube

A) Surface exposed to sea water

1)ENA 300/303	(BROWN)	150 μ x 1
2)FAJ 034/262	(GREY)	75 μ x 1
3)BEA 464	(DARK RED)	150 μ x 1
4)BEA 465	(BROWN)	150 μ x 1
5)BEA 464	(DARK RED)	150 μ x 1

B) Other part

a) Ground coating

NIPPE CERAMO (GRAY) 15 μ x 1

b) Finishing

To be finished by the shipyard with the same paint used on the hull surface.

2. Other machinery ⚠1

A) Hydraulic unit, flexible coupling and Spare & tools box

a) Ground coating	: LZ PRIMER M	(ORANGE)	40 μ x 2
b) Finishing	: UNIPACK 200	(Munnsel No.7.5Y 9/6)	25 μ x 2

B) gravity tank

a) Ground coating	: LZ PRIMER M	(GRAY)	100 μ x 1
b) Finishing	: UNIPACK 200	(Munnsel No.Gray N8.0)	100 μ x 1

C) Electrical equipment for thruster room

a) Ground coating	: Manufacturer's standard	2 times
b) Finishing	: Manufacturer's standard	2 times
Color	: Munnsel No. 10 GY 8/4	(For Main Motor)
	: Munnsel No. N 7.5	(For Starter Panel)

D) Electrical equipment for bridge

a) Ground coating	: Manufacturer's standard	2 times
b) Finishing	: Manufacturer's standard	2 times
Color	: Manufacturer's standard	
	Munnsel No. N-2.0 (master panel & wing panel)	

X. Drawings for submission

Name of documents	Approval spec.	For Working	Finished plan
Technical spec. & drawings for thruster	15	8	5
Remote control system	15	8	5
Main motor	15	8	5
Starter panel	15	8	5
Shop test procedure	15	--	--
Spare parts & special tools	15	1*	5
Instruction book	--	--	5
Results of test & inspection	--	--	5

* Reproducible sheet

XI. Exception of supply

The followings are not included in our supply.

1. Bellmouth and nozzle which are joined to the thruster tube.
2. Fitting of the tube to the hull structure.
3. Guard grids (to be provided by the shipyard).
4. Anti-corrosive anodes for tunnel, bellmouth, guard grids, nozzle and adjacent section.
5. Materials for the piping and piping fittings.
6. Materials for the wiring and wiring fittings.
7. Installation of the gravity tank and the hydraulic unit.
8. Installation bases, bolts and nuts for motor control device.
9. Installation of electric equipment (Control panel, stand, motor and so on).
10. Supports for main motor to protect from vibration.
11. Lubricating oil (Gear oil ISO VG 100, 670 liter).
12. Parts for bridge control system
13. Step up transformer

XII. Recommended oil and grease for thruster

Oil maker	Gear oil	Grease
NIPPON OIL	BONNOC SP 100	EPNOC GREASE AP2
IDEMITSU KOSAN CO.LTD.	Daphne Super Gear Oil 100	Daphne Coronex Grease EP2
MITSUBISHI	DIAMOND GEARLUB SP 100	DIAMOND MULTIPURPOSE EP2
Japan Energy Corporation	JOMO Reductus 100	JOMO Lisonix Grease EP2
SHELL	OMALA OIL 100	ALVANIA EP2
ESSO	SPARTAN EP 100	LITHTAN EP2
MOBIL	MOBIL GEAR 627	MOBILUX EP
FRANCE PETROLEUM	TOTAL CARTER EP 100	TOTAL MALTIS EP 2
TEXACO	MEROPA 100	PREMIUM RB GREASE2
Castrol Limited	ALPHA SP 100	SPHEEROL AP2

REVISION
図面来歴

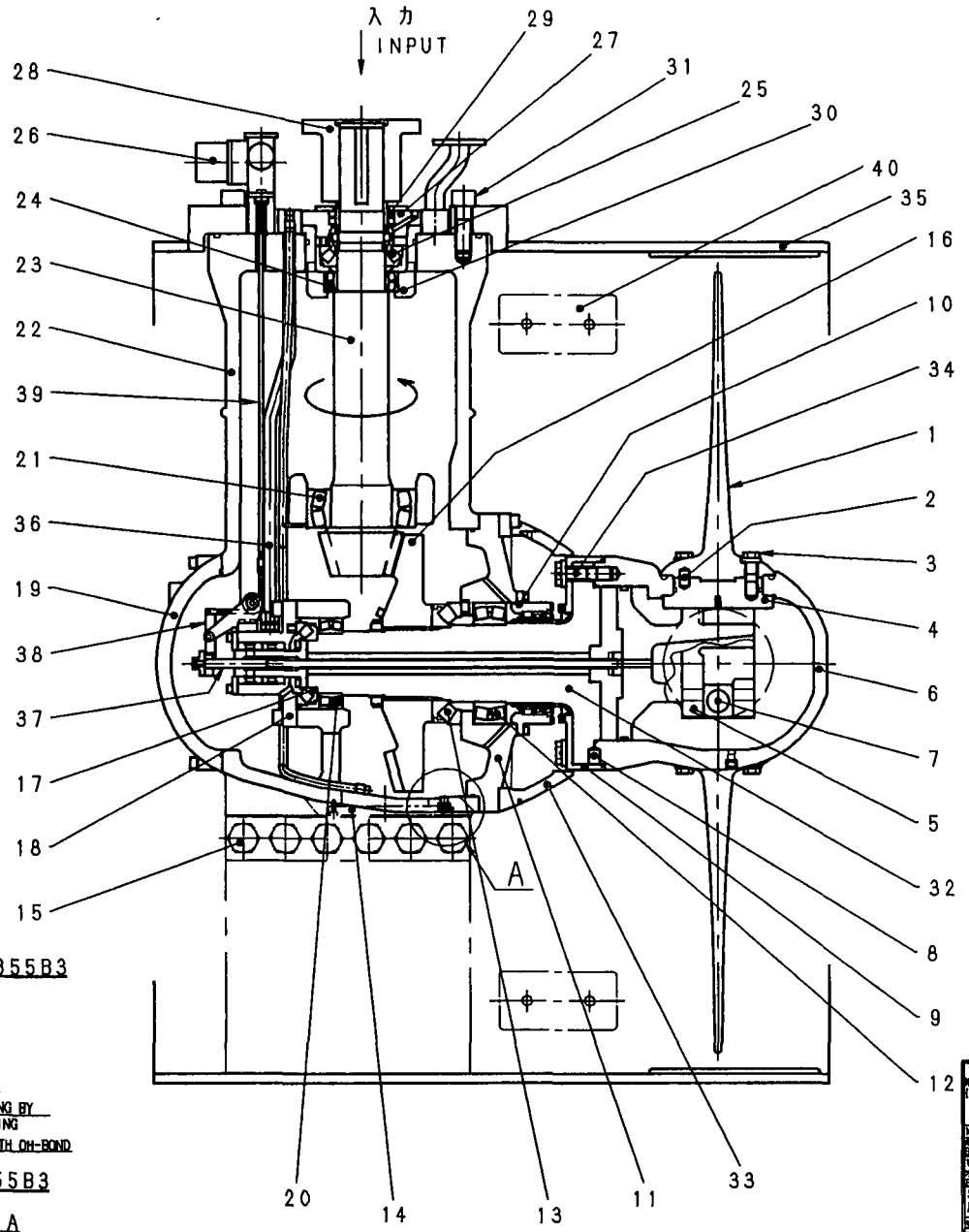

ITEM	品名	NAME	REQ'D NO
1	プロペラブレード	PROPELLER BLADE	4
2	ピン	PIN	4SETS
3	ブレードボルト	BLADE BOLT	4SETS
4	クランクディスク	CRANK DISC	4
5	クロスヘッドピストン	CROSSHEAD PISTON	1
6	プロペラハブ	PROPELLER HUB	1
7	スライディングブロック	SLIDING BLOCK	4
8	ピン	PIN	1SET
9	シャフトフード	SHAFT HOOD	1
10	軸封水装置	SHAFT SEALING	1SET
11	ベアリングハウジング	BEARING HOUSING	1
12	軸受	BEARING	1
13	軸受	BEARING	1
14	のぞき窓	CHECKING COVER	1
15	フィクシングボルト	FIXING BOLT	1SET
16	ベベルギヤ	BEVEL GEAR	1
17	軸受	BEARING	1
18	給油環	FEED RING	1
19	ギヤケースキャップ	GEARCASE CAP	1
20	軸受	BEARING	1
21	軸受	BEARING	1
22	ギヤケース	GEAR CASE	1
23	インプットシャフト	INPUT SHAFT	1
24	軸受	BEARING	1
25	軸受	BEARING	1
26	翼角追従発信器	BLADE ANGLE TRANSMITTER	1SET
27	スタフィングボックス	STUFFING BOX	1
28	カップリング	COUPLING	1
29	軸封水装置	SHAFT SEALING	1SET
30	ベアリングハウジング	BEARING HOUSING	1
31	フィクシングボルト	FIXING BOLT	1SET
32	プロペラシャフト	PROPELLER SHAFT	1
33	フェアリングカバー	FAIRING COVER	1
34	フィクシングボルト	FIXING BOLT	1SET
35	チューブ	TUBE	1
36	圧油パイプ	OIL TUBE	2
37	圧油導入管	OIL ENTRY TUBE	1
38	復帰レバー	FEEDBACK LEVER	1
39	チェーン	CHAIN	1
40	防食陽極板	AL-ANODE	—

MACHINERY DIVISION
MARINE MACHINERY DEPT.
(HYDRAULIC MACHINERY)
APPROVED
CHECKED
DRAWN
SCALE
3RD ANGLE PROJECTION
DATE
ORIGINAL DWG. NO.

OWNER
ORDER NO.
RULE
TYPE
KT-32B ~ 355B3

THRUSTER ASSEMBLY
スラスタ組立断面図

DWG. NO. G4-201-282
REV.

KAWASAKI HEAVY INDUSTRIES, LTD. KOBE JAPAN (A3型)

H A 入

協議印
出図先
工務
検査
出図部数
出図日

REVISION
図面来歴
R1:FOLLOWING APPROVAL COMMENT. JAN. 21. 2005
R2:RING RIB POSITION IS MODIFIED BY YARD HULL DWG. MAR. 2. 2005

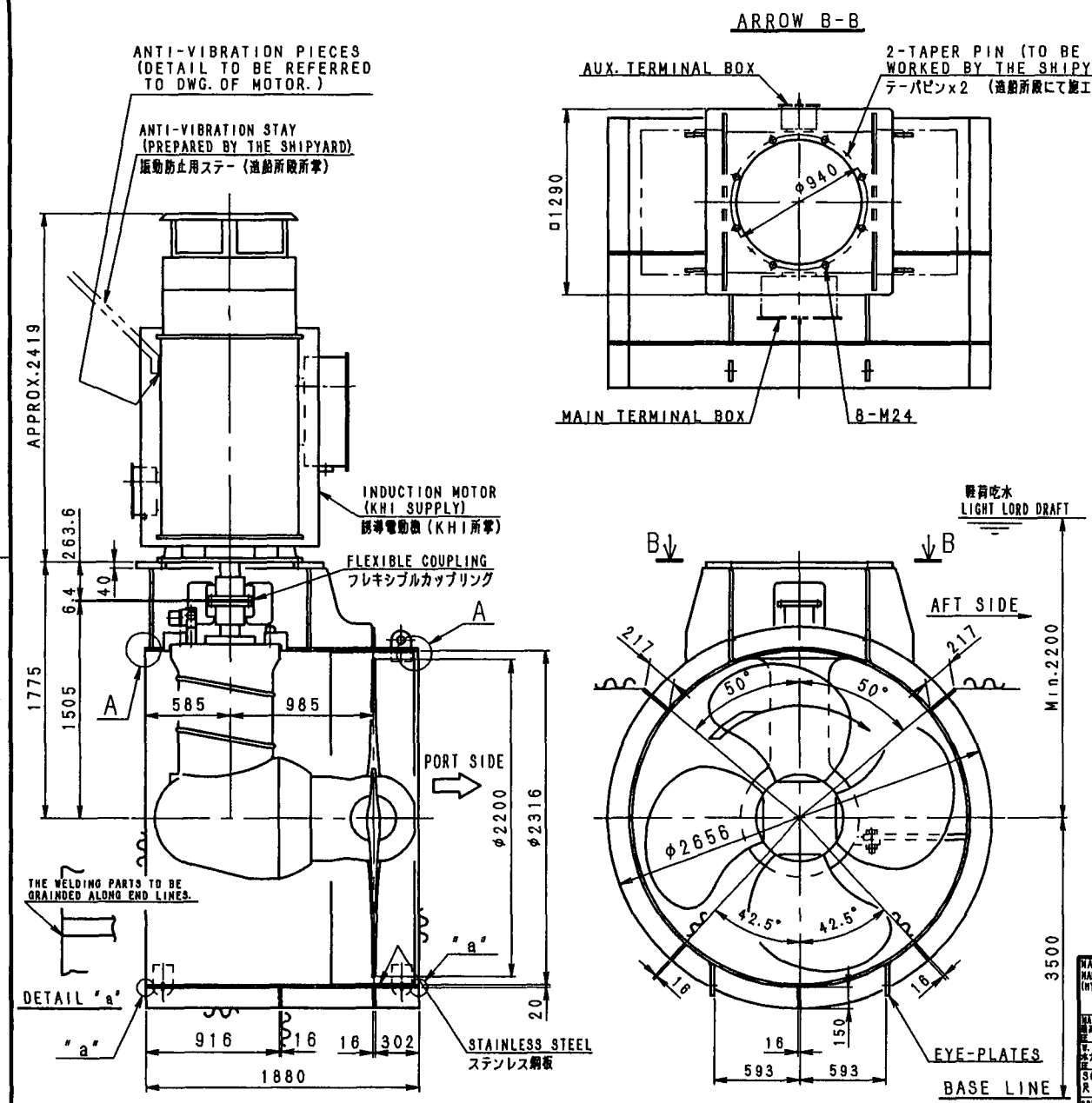

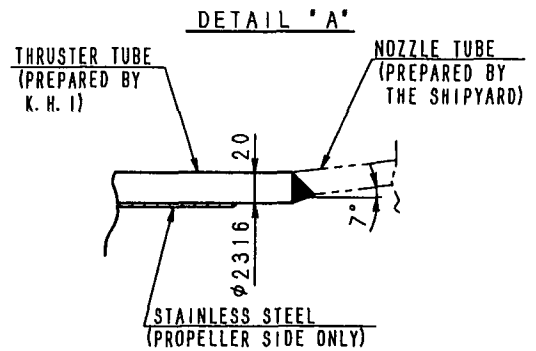

MASS OF THRUSTER UNIT (DRY) : ab. 8600kg

NOTE

1. SMOOTHLY FINISH THE INSIDE SURFACE OF CONNECTING PARTS BETWEEN THE THRUSTER TUBE AND THE NOZZLE AFTER WELDING.
2. CONSIDER THE IMPLEMENT ON THE HULL SIDE TO HANG UP THE MAIN MOTOR, abt. 5800kg.
3. ∿∿: SHOWING THE WELDING PARTS.
4. SEE SEPARATE "INSTALLATION MANUAL OF SIDE (BOW) THRUSTER" WHEN ASSEMBLING.

備考

1. メインチューブとノズルチューブとの溶接部内面は，滑かに仕上げて下さい。
2. 主電動機の吊上げ重量（約5800kg）により船体側に分解用吊上げ要具を考慮して下さい。
3. 図中∿∿部分は据付け時、溶接部分を示す。
4. 据付時には別途提出の「艤装工事における注意事項」を必ず守って下さい。

MACHINERY DIVISION MARINE MACHINERY DEP'T (HYDRAULIC MACHINERY) 機器ビジネスセンター 船舶機械部（水力機械）	APPROVED 承認	OWNER 注文主 HHI 1630series	ORDER NO. 製番 31KB068~83
MAX. W. P. 最高使用圧力	CHECKED 審査	TYPE 型式 KT-157B3	RULE 規格 LR
W. T. P. 水力試験圧力		INSTALLATION OF SIDE THRUSTER	
SCALE 尺度 1/30	DRAWN 作成	サイドスラスタ 据付要領図	
3RD ANGLE PROJECTION 三角法	DATE 作成日 2004. 11. 17 ORIGINAL DWG. NO. 原図	DWG. NO. 図番 R4-300-339	REV. R2

KAWASAKI HEAVY INDUSTRIES, LTD. KOBE JAPAN (A3型)

H A 入

協議印

出図先

工務 検査 控

出図部数

出図日

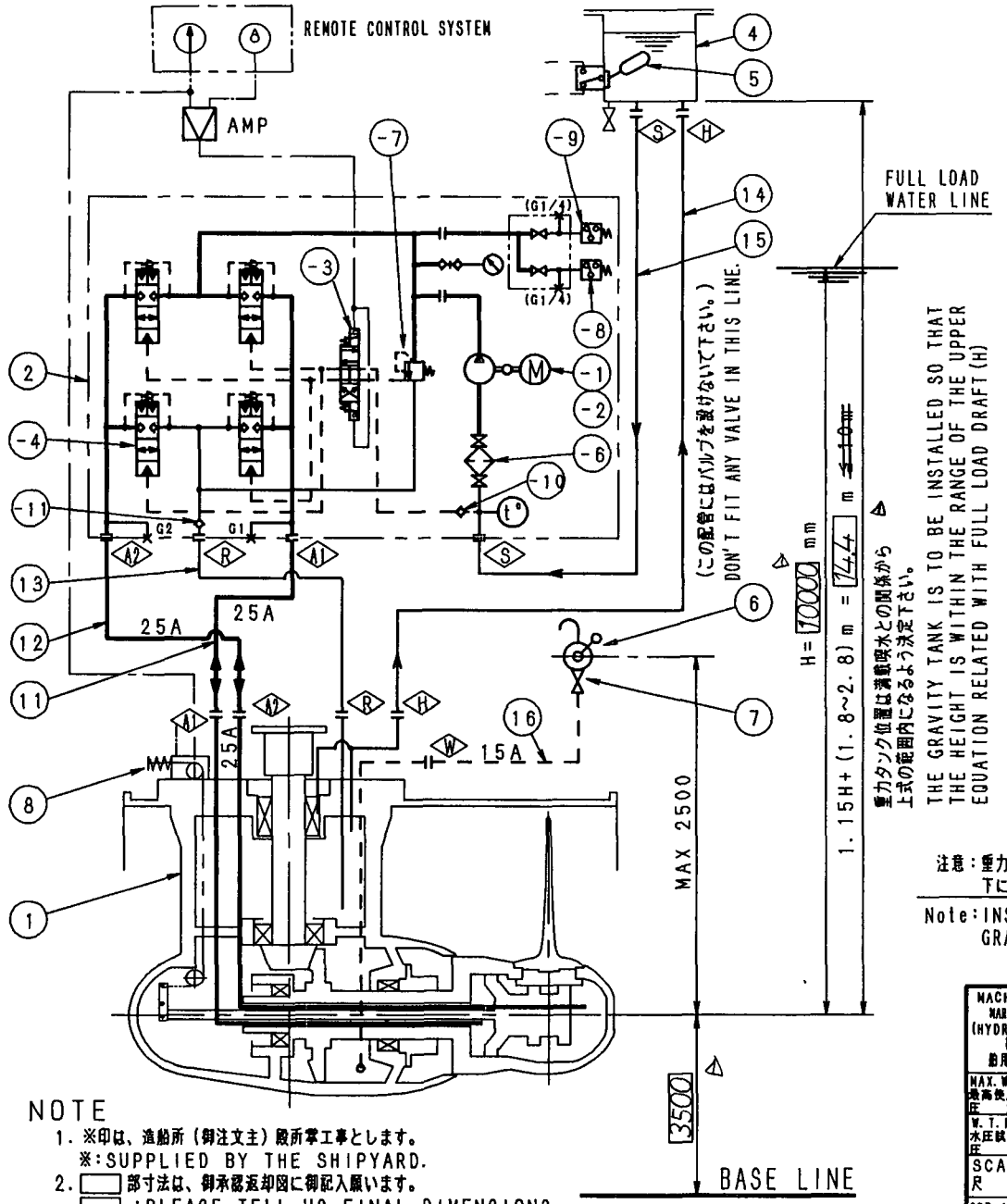

NOTE
1. ※印は、造船所（御注文主）殿所掌工事とします。
※:SUPPLIED BY THE SHIPYARD.
2. □ 部寸法は、御承認返却図に御記入願います。
□ :PLEASE TELL US FINAL DIMENSIONS.

注意：配管長さが7mを超える場合、1サイズ大きい口径に変更して下さい。
Note:ITS LENGTH EXCEEDING 7m CHANGE LARGER DIAMETER ONE.

ITEM	NAME OF PART	部品名称	REQ'D No.	REMARKS
※ 16	STEEL PIPE	管（ハンドポンプ用管）	1	15A SGP
※ 15	STEEL PIPE	管（ポンプ吸入管）	1	50A 〃
※ 14	STEEL PIPE	管（還 通 管）	1	50A 〃
※ 13	STEEL PIPE	管（排 油 管）	1	25A SGP
※ 12	STEEL PIPE	管（圧油導入管）	1	25A Sch80 STPG370S
※ 11	STEEL PIPE	管（圧油導入管）	1	25A Sch80 STPG370S
8	BLADE ANGLE TRANSMITTER	翼角追従発信器	1	
※ 7	GLOBE VALVE	フランジ形玉形弁	1	5k-15
6	HAND PUMP	潤滑油ハンドポンプ	1	
5	FLOAT SWITCH	油面リレー	1	NORMAL CLOSE
4	GRAVITY TANK	重力タンク	1	VOLUME 80L
-11	CHECK VALVE	チェック弁	1	
-10	CHECK VALVE	チェック弁	1	SET PRESS. 0.4MPa(4Kgf/cm²)
-9	PRESSURE SWITCH	圧力スイッチ	1	SET PRESS. 0.5MPa(5Kgf/cm²)
-8	PRESSURE SWITCH	圧力スイッチ	1	SET PRESS. 0.3MPa(3Kgf/cm²)
-7	SAFETY VALVE	安 全 弁	1	SET PRESS. 5.5MPa(56Kgf/cm²)
-6	STRAINER	ストレーナ	1	150 MESH
-4	CARTRIDGE (LOGIC) VALVE	カートリッジ（ロジック）弁	4	
-3	SOLENOID OPERATED VALVE	電磁切換弁	1	
-2	ELECTRIC MOTOR	圧油ポンプ用電動機	1	5.5kW X 3600r/min
-1	OIL SERVICE PUMP	圧油ポンプ	1	29.8L/minX4.5MPa(46Kgf/cm²)
2	HYDRAULIC UNIT	油圧ユニット	1	
1	THRUSTER UNIT	スラスタ本体	1	

注意：重力タンク下面より下に配置下さい。
Note:INSTALL BELOW GRAVITY TANK.

MACHINERY DIVISION MARINE MACHINERY DEP'T (HYDRAULIC MACHINERY) 機械ビジネスセンター 舶用機械部（水力機械）	APPROVED 承認	OWNER 注文主	ORDER NO. 製番 / RULE 規格
MAX. W. P. 最高使用圧力	CHECKED 審査	TYPE 型式 KT-157B1/B3	
W. T. P. 水圧試験圧力		配管系統図	
SCALE 尺度	DRAWN 作成	SKELETON DIAGRAM OF PIPING	
3RD ANGLE PROJECTION 三角法	DATE 作成日 / ORIGINAL DWG. NO. 元番	DWG. NO. 図番 R4-200-152	REV. R1

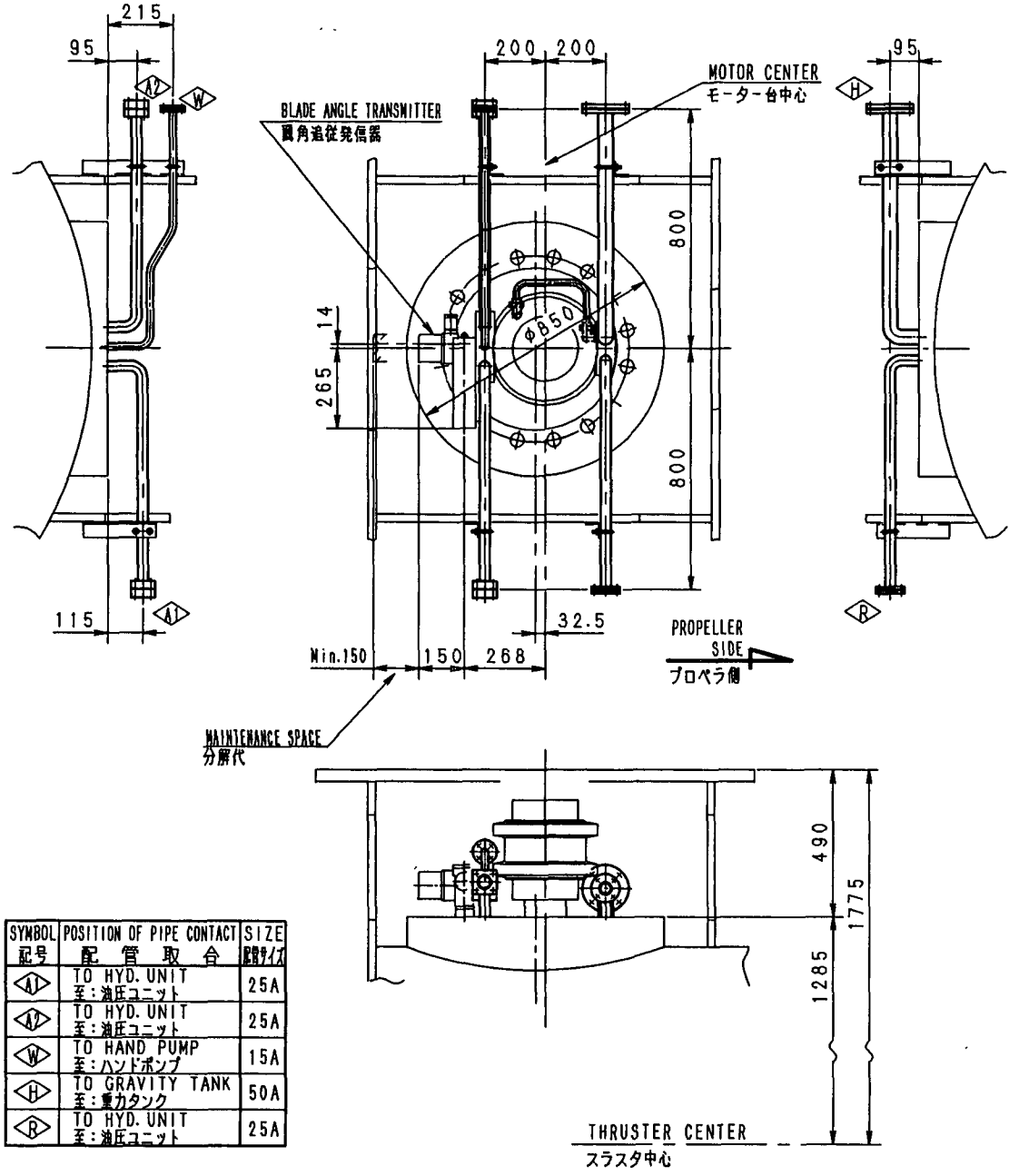

SYMBOL 記号	POSITION OF PIPE CONTACT 配管取合	SIZE 配管サイズ
A1	TO HYD. UNIT 至：油圧ユニット	25A
A2	TO HYD. UNIT 至：油圧ユニット	25A
W	TO HAND PUMP 至：ハンドポンプ	15A
H	TO GRAVITY TANK 至：重力タンク	50A
R	TO HYD. UNIT 至：油圧ユニット	25A

REVISION
図面来歴

PIPING ITEM	A1, A2	W	H	R
DETAIL OF FLANGE	φ34.5 14	φ22.2 9	φ61.1 14	φ34.5 10

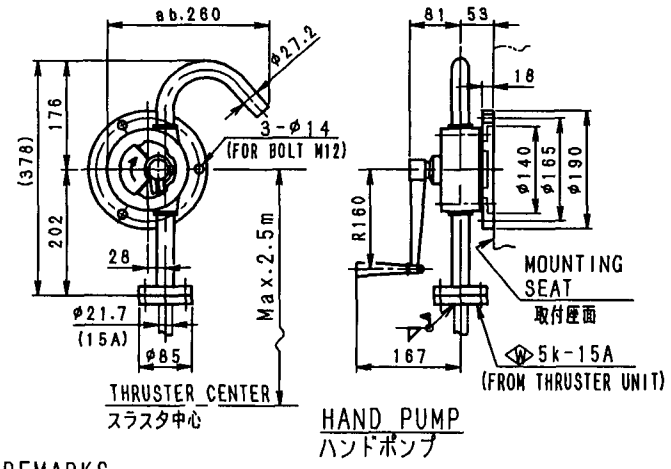

REMARKS

1. EACH COMPANION FLANGE AND PIPE ARE TO BE WELDED COMPLETELY BY SHIPYARD.
2. SEPARATELY SUPPLIED HAND PUMP IS TO BE INSTALLED SO THAT THE SUCTION HEAD BECOMES MINIMUM. (MAX. HEIGHT FROM CENTER OF THRUSTER IS 2.5m.)
3. COMPANION FLANGES WITH BOLTS, NUTS AND PACKINGS ARE SUPPLIED BY K. H. I.

備考

1. 各部相フランジと船内配管との溶接は造船所殿にて十分な強度を有し、かつ油漏れのないように施行願います。
2. ハンドポンプは本図に示すように単品として支給致しますので、サクションヘッドが極力小さくなる位置（最大：スラスタ中心より 2.5m）に据付け願います。
3. 相フランジ（ボルト，ナット，パッキン付）は当社所掌とします。

PRIME MOVER DIV'N 原動機事業部 MARINE MACHINERY DEPT. 船用機械部	APPROVED 承認	OWNER 注文主	ORDER NO. 製番 制式図
MAX. W. P. 最高使用圧力	CHECKED 審査	TYPE 型式 KT-157B3	
W. T. P. 水力試験圧力		PIPING ARRANGEMENT 配管装置図	
SCALE 尺度	DRAWN 作成		
3RD ANGLE PROJECTION 三角法	DATE 作成日 ORIGINAL DWG. NO. 原番	DWG. NO. 図番	REV.

KAWASAKI HEAVY INDUSTRIES, LTD. KOBE JAPAN (A3型)

TPIP0069

H A 入

備調印

出図先

工務 検査 控

出図部数

出図日

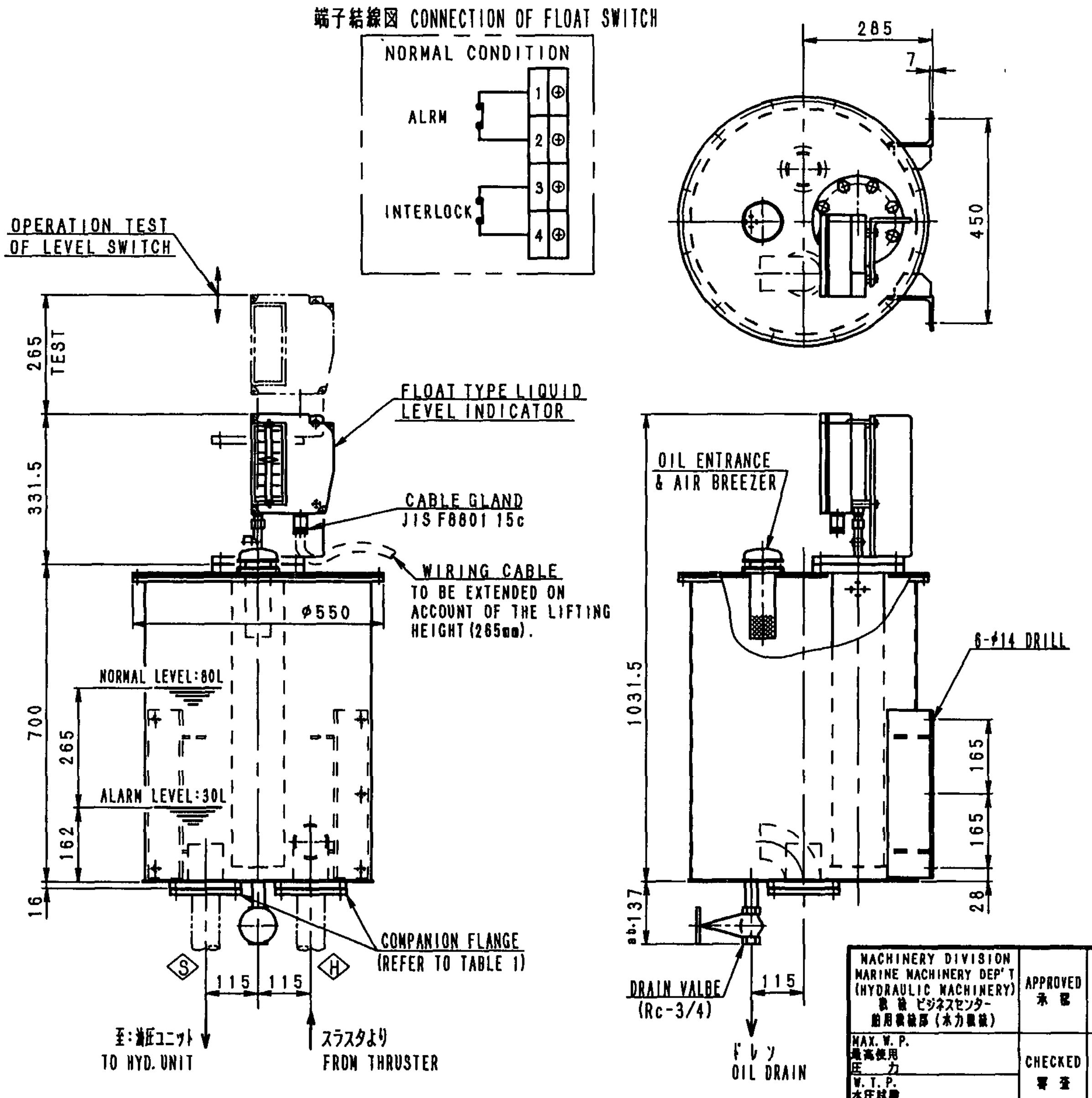

REVISION
図面来歴

TABLE-1 PIPE SIZE ON SHIP SIDE (JIS B2220)

THRUSTER TYPE	Ⓢ	Ⓗ
KT-32B~KT-55B3	40A	32A
KT-72B1~KT-130B3	40A	40A
KT-157B1/B3	50A	50A
KT-187B1/B3, KT-219B2	50A	65A
KT-219B1/B3~KT-300B3	65A	65A

REMARKS
1. THE INSTALLATION POSITION TO BE IN ACCORDANCE WITH 「SKELETON DIAGRAM OF PIPING」.
2. EACH COMPANION FLANGE AND PIPE ARE TO BE WELDED COMPLETELY BY THE SHIPYARD.
3. COMPANION FLANGES ARE TO BE SUPPLIED WITH BOLTS, NUTS AND PACKINGS BY K. H. I.

備考
1. 重力油タンクの据付位置については「配管系統図」を参照下さい。
2. 各部相フランジと船内配管との溶接は造船所殿にて十分な強度を有し、かつ油漏れのないように施行ねがいます。
3. 相フランジ（ボルト、ナット、パッキン付）は当社所掌とします。

WEIGHT : ab. 80kg (DRY)

MACHINERY DIVISION MARINE MACHINERY DEP'T (HYDRAULIC MACHINERY) 機械ビジネスセンター 舶用機械部（水力機械）	APPROVED 承認	原田	OWNER 注文主 / ORDER NO. 製番 制式図 / RULE
MAX. W. P. 最高使用圧力 / W. T. P. 水圧試験圧力	CHECKED 審査	石原	TYPE 型式 KT-32B ~ 300B3
SCALE 尺度 1/10	DRAWN 作成	加味	80L 重力タンク組立図 / 80L LITER GRAVITY TANK ASSEMBLY
3RD ANGLE PROJECTION 三角法	DATE 作成日 2004. 8. 16 / ORIGINAL DWG. NO. 元番 88-950-0500		DWG. NO. 図番 R4-300-322 / REV.

R4-300-322

H
A
入

KPNEIG	3
工務	
検査	2
控	1

出図先
出図部数
出図日

KAWASAKI HEAVY INDUSTRIES, LTD. KOBE JAPAN (A3型)

REVISION
R1:THE RELIEF PRESSURE IS MODIFIED 02.10.29
M. ISHIHARA, M. YAMANE

記号符合 PIPING ITEM	(25A) A1, A2	(25A) R	(50A) S
管継手詳細図 DETAIL OF FLANGE	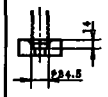		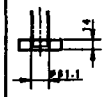
規格 STANDARD	JIS B2291	JIS B2291	JIS B2220

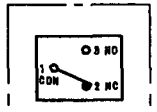

圧力スイッチ
PRESS. SWITCH

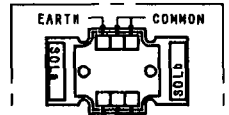

SOL. OPERATED VALVE

結線図
CONNECTION DIAGRAM

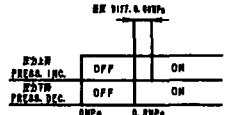

⑨アラーム用
FOR ALARM

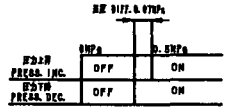

⑱インタロック用
FOR INTERLOCK

圧力スイッチ設定
PRESS. SWITCH SETTING

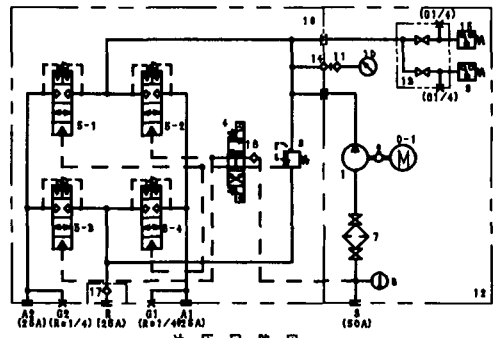

油圧回路図
OIL HYD. CIRCUIT DIAGRAM

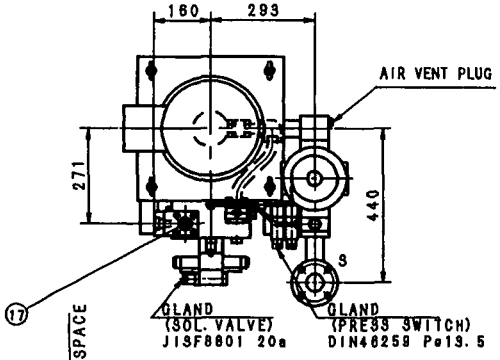

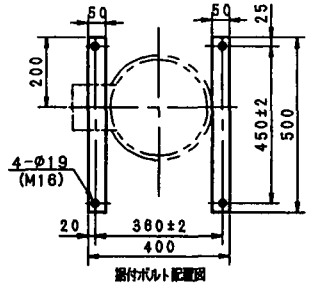

据付ボルト配置図
FOUNDATION ARRANGEMENT

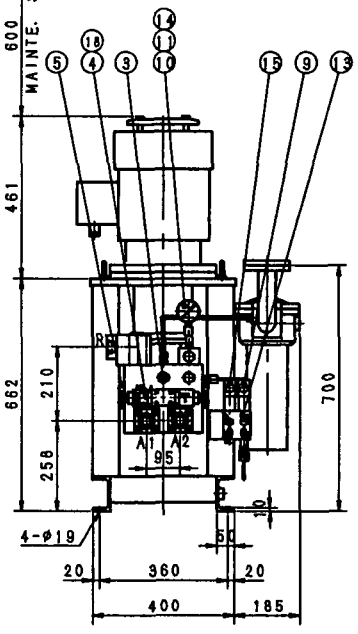

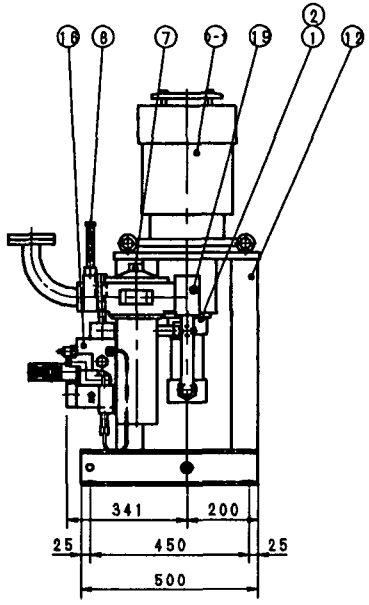

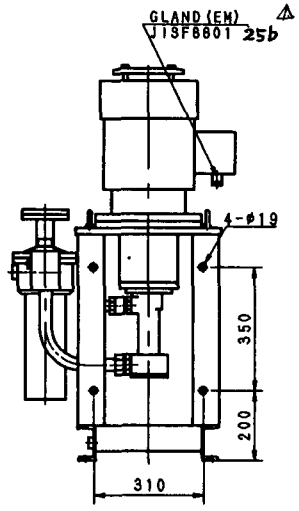

合計質量 : 260kg

記号 ITEM	名称 NAME OF PART	員数 Q'TY	型式 TYPE	備考 REMARKS
0-1	電動機(立型) ELECTRIC MOTOR	1	6.5KW-2P (132S)	TOTALLY-ENCLOSED FAN COOLED FLANGE TYPE
18	空気抜きプラグ AIR VENT PLUG	1	SPO-18	
16	チェック弁 CHECK VALVE	1	CXDA-XCN-QBP/S	
17	チェック弁 CHECK VALVE	1	CXHA-XDN	
16	マニホールド MANIFOLD	1	.	
15	圧力スイッチ PRESSURE SWITCH	1	MBC5100-5	(FOR START INTERLOCK) SET PRESS. :0.5MPa DIFFERENTIAL:0.07MPa
14	圧力計カップリング GAUGE COUPLING	1	100-52.000	R1/4
13	テストバルブ TEST VALVE	1	MBV5000-2201	テストプラグ:G1/4 PLUG FOR TEST:G1/4
12	共通台板 COMMON BED	1	.	
11	圧力計コネクタ GAUGE CONNECTOR	1	400-42.000	G1/4
10	圧力計 PRESSURE GAUGE	1	GV50-123-10MPa	G1/4
9	圧力スイッチ PRESSURE SWITCH	1	MBC5100-9	(FOR LOW PRESS. ALARM) SET PRESS. :0.3MPa DIFFERENTIAL:0.08MPa
8	温度計 THERMO METER	1	TMA-M24X2-B	
7	サクションフィルター SUCTION FILTER	1	VLF-12-100-12F	150 MESH (メッシュ) インジケータ、バルブ付 WITH INDICATOR & VALVE
5	カートリッジ(ロジック)弁 CARTRIDGE (LOGIC) VALVE	4	LKFC-XDN	
4	電磁切換弁 SOLENOID OPERATED VALVE	1	DE6P-20-208 -WD24AL	DC24V
3	カートリッジ(リリーフ)弁 CARTRIDGE (RELIEF) VALVE	1	RVEA-LDN	SET PRESS. 15.5 MPa WITH DEVICE FOR MAX. SETTING PRESS.
2	カップリング COUPLING	1	ROTEX28/38-92A	
1	油圧ポンプ HYDRAULIC PUMP	1	25-6N6D99S	

注記
圧力スイッチ用ケーブルグランドサイズはDIN 46259, Pg13.5です
JIS F8801 15a, 15b, 15c, 20a, 20bに対応しています

REMARK
CABLE GLAND SIZE FOR THE PRESSURE SWITCH IS DIN 46259, Pg13.5.
THE EQUIVALENT GLAND SIZE OF JIS F8801:15a, 15b, 15c, 20a and 20b

MACHINERY DIVISION
MARINE MACHINERY DEPT.
(HYDRAULIC MACH.(KEKY))
APPROVED
CHECKED
DRAWN
SCALE 1/10
DES. ANGLE PROJECTION
DATE 2002.08.17
OWNER
ORDER NO.
NUCLEUS
TYPE (2PS) KT-157B1/B3, KT-187B1/B3
サイド スラスタ 圧油ポンプユニット
SIDE THRUSTER HYDRAULIC PUMP UNIT
DWG. NO. R4-602-012
REV. R1
KAWASAKI HEAVY INDUSTRIES, LTD. KOBE JAPAN (A2版)

R4-602-012

TOTALLY-ENCLOSED FAN-COOLED MACHINE
VERTICAL TYPE INDUCTION MOTOR (IP-44)

SIDE THRUSTER CPP CONTROL
HYD OIL PUMP

TYPE : TIV 440V

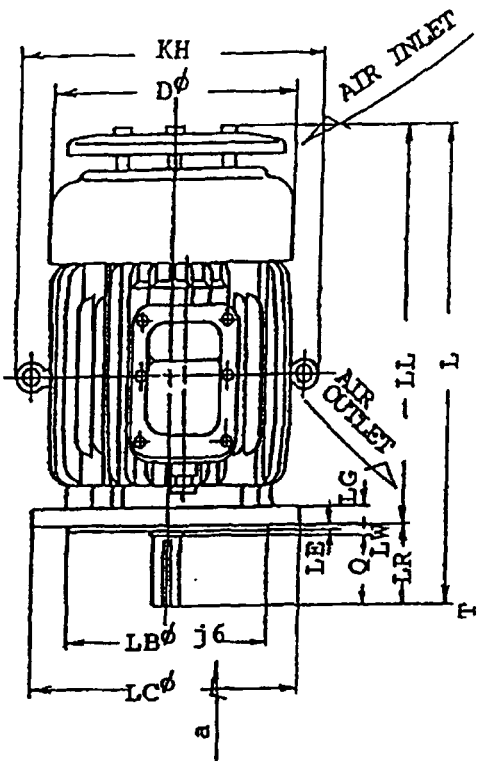

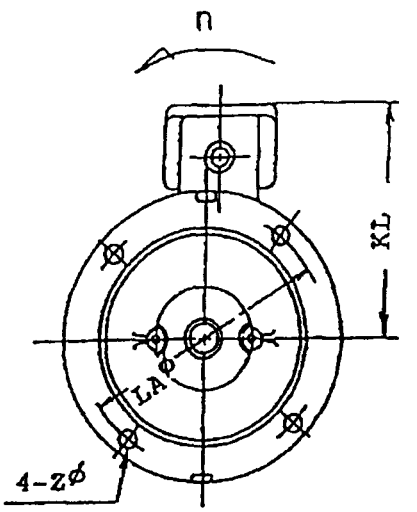

LOOKING FROM ARROW"a"

(mm)

MODEL	FLANGE NO.	D	L	LA	LB	LC	LE	LG	LL	Q	LR	LW	S	T	U	W	Z	KH	KL
TIV-132S	FF265	274	522	265	230	300	4	20	442	80	80	0	38	8	5	10	15	360	244
TIV-132M	FF265	274	540	265	230	300	4	20	460	80	80	0	38	8	5	10	15	360	244

MODEL	OUTPUT (kW)	NO. OF POLES	CURRENT (A)	SPEED (min^{-1})	MASS (kg)
TIV-132S	5.5	2	9.5	3440	Ca 67
TIV-132S	7.5	2	12.5	3460	Ca 71.5
TIV-132S	5.5	4	9.8	1745	Ca 64.5
TIV-132M	7.5	4	13.0	1740	Ca 78.5
TIV-132S	3.7	6	7.7	1150	Ca 67
TIV-132M	5.5	6	11.0	1150	Ca 83.5

SPACE HEATER (WINDING HEATING)
1Ø 15V 2.6A

COMMON REMARK	
RATING	CONT.
VOLTAGE	440 V
NO. OF PHASES	3 ϕ
FREQUENCY	60 Hz
INSULATION	B CLASS

MODEL	BEARING NO.	
	L. S.	O. S.
132S	6308ZZ	6306ZZ
132M	6308ZZ	6306ZZ

MAIN CABLE	TPYCY – 4.0× 1
SH CABLE	DPYC – – × –
MAIN CABLE GLAND	25b × 1
SH CABLE GLAND	– × –
STARTING METHOD	DIRECT, ~~Y–Δ, COMP~~
STARTING TORQUE	150 % AT DIRECT ST ~~% AT Y START~~

CHANGE
Δ 1999.4.24 M.A

3RD ANGLE PROJECTION	UNIT mm	CHIEF	T. INOMATA	OUT LINE
SCALE /		CHECK	T.SHIMOYAMA	
DATE 1999.4.21		DESIGN	M.AZAMI	
		TRACE	M.AZAMI	DRAW. NO GM 406423

TAIYO ELECTRIC CO.,LTD.

3

REVISION
図 面 来 歴

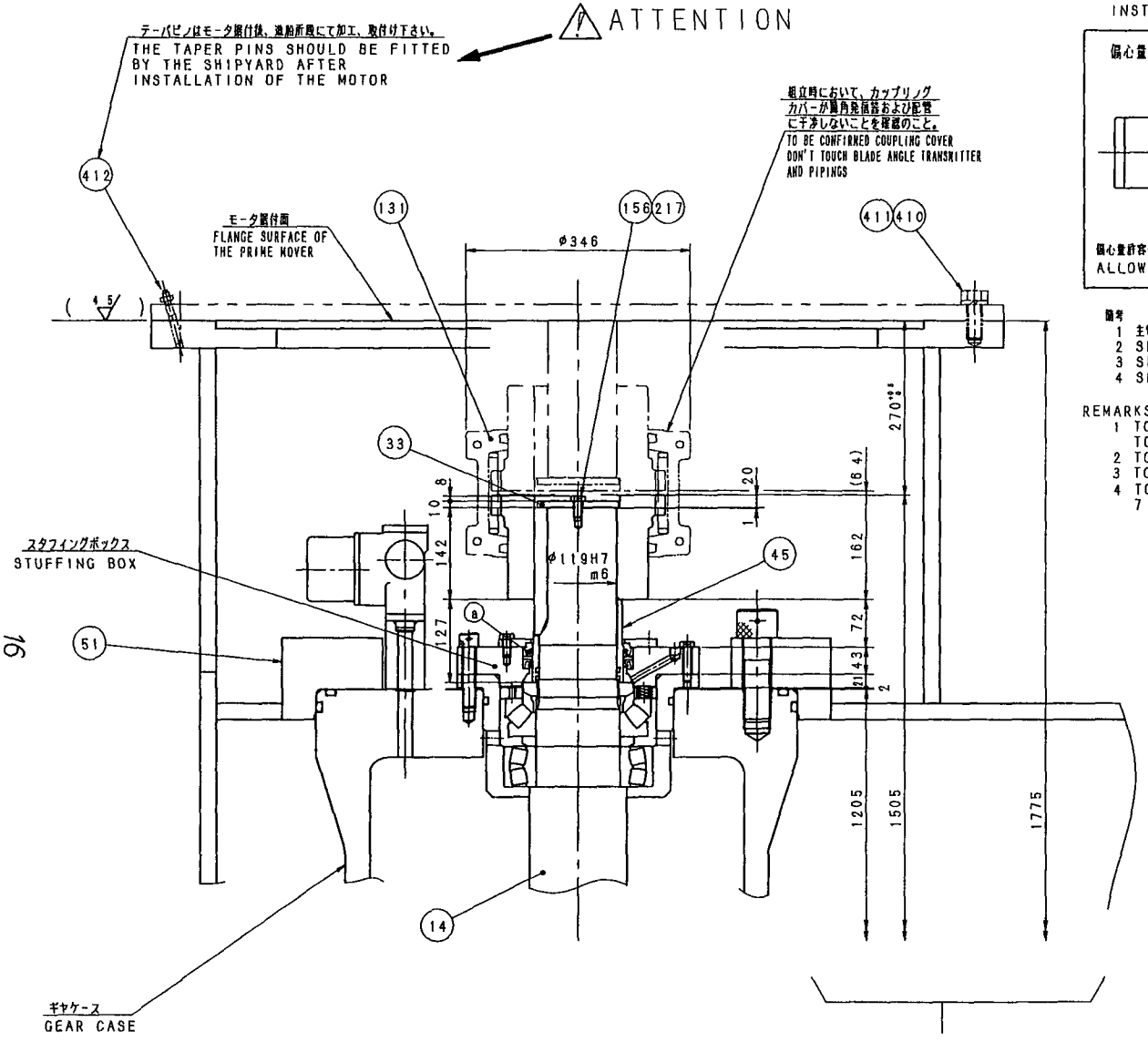

プロペラシャフト C. L より
FROM PROP. SHAFT C L

SFカップリングの取付け誤差一覧表
INSTALLATION ALIGNMENT LIMITS

偏心量 PARALLEL ECCENTRICITY	偏角値 DECLINATION	面間寸法 GAP
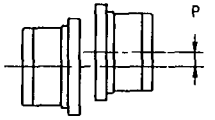	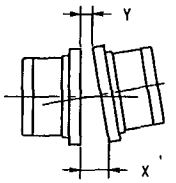	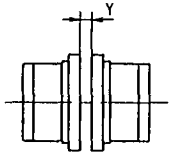
偏心量許容値 P≦0 28mm ALLOWANCE	偏角許容値 X−Y≦0 30mm ALLOWANCE	標準値 Y=6 4 (RECOMENED VALUE) 許容値 Ymax≦12 7mm Ymin≧1. 6mm

備考
1 主電動機据付時のSFカップリングの取付け誤差は、上記「SFカップリングの取付け誤差一覧表」以内とすること。
2 SFカップリングの心出し要領及び組立て要領は、「艤装工事における注意事項（SFカップリング取扱説明書）」を参照のこと。
3 SFカップリング組立て時は、カップッリング内部にグリースを充填して下さい。（充填量 約910g）
4 SFカップリングのラングスペーサを取付要領（SFカップリング取扱説明書）に従い調整の上、取付けのこと。

REMARKS
1 TO BE INSTALLED WITHIN INSTALLATION ALIGNMENT LIMIT ACCORDING TO ABOVE TABLE
2 TO BE ASSEMBLED IN ACCORDANCE WITH INSTALLATION MANUAL
3 TO BE FILLED UP INSIDE COUPLING WITH GREASE
4 TO BE ASSEMBLED COVER WITH MATCH MARK UP AND TIGHTEN TORQUE 7 3N m (750kgf cm)

TO MAKE A TAPERED REMAER HOLE BY THE SHIPYARD

PARTS NO 詳細図面 KMS品等の呼び方	ITEM NO 符号	NAME OF PARTS 品名	MATERIAL 材料	WORK 常備	SPARE 予備	FOR ONE 単数	TOTAL 合計	TEST PIECE 試験片	NOTES 記事 セザ セカー番号
	412	SCREW END TAPER PIN ネジ付テーパピン							造船所殿にてキリ穴加工
	411	SPRING WASHER バネザガネ							
	410	HEX BOLT 六角ボルト							
φ1 6X2 2M	217	LOCKING WIRE ロッキング ワイヤ	SS 鋼線	1					
JIS B 1180 M12X25	156	HEX BOLT 六角ボルト	SS400	2					頭部キリ穴加工
	131	SF COUPLING SF カップリング	KEKER'S STANDARD 完成品	1					TYPE:1130T10
	51	TUBE チューブ	RULE MATERIAL 規格鋼板	1					
	45	SLEEVE スリーブ	S50C Ⓗ	1		3 2	3 2		
	33	STOPPER PLATE カップリング 止め板	SS400	1		0 95	0 95		
	32	KEY キー	S45C Ⓗ	1		0 9	0 9		
	14	INPUT SHAFT インプットシャフト	DIN17210 17Cr+NiMO6	1		155	155		

MACHINERY DIVISION MARINE MACHINERY ENG'NG DEP'T (HYDRAULIC MACHINERY) 機械事業部 舶用機械部（水力機械）	APPROVED 承認	OWNER 注文主	ORDER NO 製番 制式図（314T396〜） RULE規格
MAX W P 最高使用圧力	CHECKED 審査	TYPE 型式	KT-157B1/B3
W T P 水圧試験圧力			インプットシャフト-SF カップリング 組立図 INPUT SHAFT-SF COUPLING ASS'Y
SCALE 尺度 1/5	DRAWN 作成		
3RD ANGLE PROJECTION 三角法	DATE 作成日 H12. 12 7 ORIGINAL DWG NO 元番 38-220-011	DWG NO 図番	G4-200-T396 REV

KAWASAKI HEAVY INDUSTRIES, LTD. KOBE JAPAN (A2型)

H A 入

16

削り加工寸法の普通許容差 (面取り部を除く)	
呼び寸法の区分	寸法差
0.5 以上 6以下	±0.1
6をこえ 30以下	±0.2
30をこえ 120以下	±0.3
120をこえ 400以下	±0.5
400をこえ1000以下	±0.8
1000をこえ2000以下	±1.2
2000をこえ4000以下	±2.0

表面粗さ記号 (μm)												
除去加工の要否	任意										禁止	無記号
Ra	0.2	0.4	0.8	1.6	3.2	6.3	12.5	25	[illegible]	[illegible]		
最大高さRy	0.8S	1.6S	3.2S	6.3S	12.5S	18S	25S	35S	50S	100S		
仕上記号	▽▽▽▽	1.6-S ▽▽▽	3.2-S ▽▽▽	▽▽▽	12.5-S ▽▽	▽▽	25-S ▽▽	35-S ▽	▽	100-S ▽		(~)

REVISION
図面来歴

TCUP0065

使用回転数 SPEED	1160r/min
伝達力 TRANSMITTING POWER	1600kW(2175ps)

SFカップリングの取付け誤差一覧表
INSTALLATION ALIGNMENT LIMITS

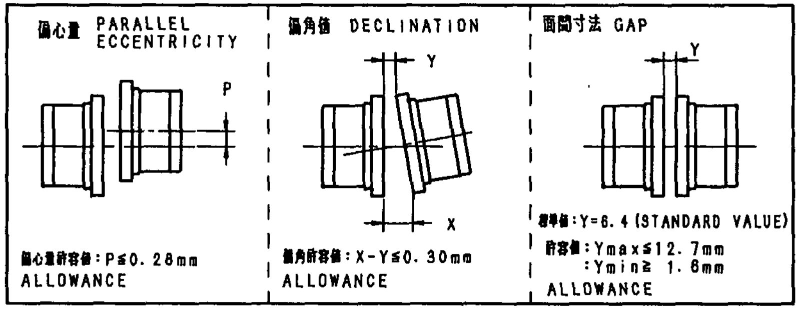

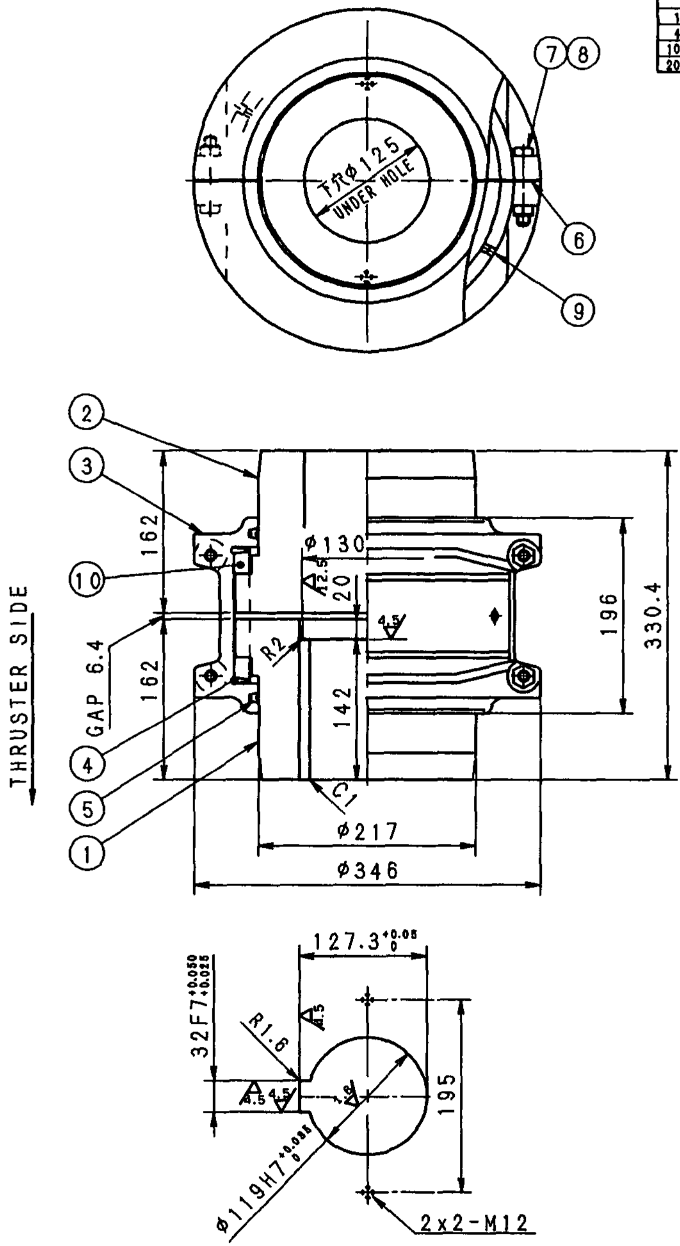

MASS 質量 約90.9kg

PARTS NO. 詳細図番 部品番号	ITEM NO. 符号	NAME OF PARTS 品名	MATERIAL 材料	WORK 常備	SPARE 予備	FOR ONE 単機	TOTAL 合計	TEST PIECE 試験片	NOTES 記事 セザ・セカー番号
	10	RUNG SPACER ラングスペーサ	NEOPRENE ネオプレン	8					
	9	HEX. SOCK. PLUG 六角穴付プラグ	SCM435	2					
	8	NYLON NUT ナイロンナット	SS400	4					
	7	HEX. SOCK. BOLT 六角穴付ボルト	SCM435	4					M12x70L
	6	GASKET ガスケット	FIBER FLEX	2					
	5	SF SEAL RING SFシールリング	NEOPRENE ネオプレン	2					
	4	T-GRIDMEMBER Tグリッドメンバ	Cr−V	2					
	3	T-COVER Tハーフカバー	ALLOY STEEL	2					
	2	T-HUB Tハブ	S45C	1					
	1	T-HUB Tハブ	S45C	1					

FOR ONE( ) ( )分割数　MASS 質量(Kg)

PRIME MOVER DIV'N 原動機事業部 / HYDRAULIC MACHINERY DEP'T 舶用機械部(水力機械)	APPROVED 承認	
MAX. W.P. 最高使用圧力	CHECKED 審査	
W.T.P. 水圧試験圧力		
SCALE 尺度 1/5	DRAWN 作成	
3RD ANGLE PROJECTION 三角法	DATE 作成日	
	ORIGINAL DWG. NO. 元番	

OWNER 注文主　ORDER NO. 製番　RULE 規格

TYPE 型式 KT-157B3 60Hz(1130T10)

SF カップリング組立図
SF COUPLING ASSEMBLY

DWG. NO. 図番　REV.

H A 入

協議印

出図先

工務 8
検査 2
控 1

出図部数

出図日

KAWASAKI HEAVY INDUSTRIES, LTD. KOBE JAPAN (A3型)

HYUNDAI HEAVY INDUSTRIES CO.,LTD.

S.No.H1630

SIDE THRUSTER

KT-157B3 TYPE

TECHNICAL DATA

DELIVERY	
YARD	5
KPME工務	
KPME工事	1
検　査	
控	1
ISSUE	

KAWASAKI
HEAVY INDUSTRIES, LTD.
MACHINERY DIVISION
MARINE MACHINERY DEPARTMENT

【 ORDER NO. 31KB068 】

This list shows various data which are necessary in the case of " RUNNING ", " MAINTENANCE ", " ASSEMBLY " and " DISASSEMBLY " for the side (bow) thruster as attached manual of the thruster's instruction book.

The procedure of " RUNNING ", " MAINTENANCE ", " ASSEMBLY " and " DISASSEMBLY " for the side (bow) thruster should be operated and worked after studying the " INSTRUCTION BOOK " sufficiently.

I. PARTICULARS

I.1 THRUSTER UNIT

Type	: KT - 157B3 Controllable Pitch Type, with Motor Base
Number of units	: 1 unit／vessel
Propeller diameter	: 2200 mm (skewed type) x 4 blades
Thrust	: abt. 196 kN { abt. 20.0 ton }
Input power	: 1335 kW
Propeller speed	: 315 r/min
Input shaft speed	: 1160 r/min
Max. controlling blade angle	: 50 °
Rated blade angle	: ±18.8 °
Direction of input shaft rotation	: Counter clockwise view from prime mover

I.2 Prime mover

Type	: 3 phase, Totally enclosed, vertical type
Number of units	: 1 unit／vessel
Output	: 1335 kW
Revolution number	: 1200 r/min (Synchronous speed)
Voltage x Frequency	: AC 3 ϕ 3300 V 60 Hz
Rating	: 30 minutes
Current	: abt. 284Amp

I .3 AUX. MACHINERY

(1) Hydraulic unit

Oil service pump

Type : Vertical screw type x 1 set/unit 25-6N8D
30 lit/min x 4.5 MPa { 46 kgf/cm } x 3440 r/min

Driving motor

Type : Totally enclosed induction motor x 1 set/unit
AC 3 ϕ 440 V 60 Hz 5.5 kW x 3600 r/min

DC solenoid valve

Type : DE6P-20-208-WD24AL DC 24 V

Pressure switch

ON Pressure : 0.4 MPa { 4 kgf/cm }

OFF Pressure : 0.3 MPa { 3 kgf/cm }

Relief valve

Set pressure : 5.5 MPa { 56 kgf/cm }

Strainer : 150 Mesh

(2) Flexible coupling

Type : SF coupling 1130T-10

(3) Gravity tank

Capacity : 80 lit.

Alarm level : 30 lit.

(4) Hand pump

Type : ROTARY PUMP

Delivery volume : 0.2 lit./rotation

I .4 Mass (WEIGHT)

Thruster : abt. 8600 kg

Prime mover : abt. 5800 kg

Hydraulic unit : abt. 260 kg

Flexible coupling : abt. 91 kg

Accesarry : abt. 50 kg

Ⅱ. OPERATION

Ⅱ.1 Interlock for prime mover

(1) Gravity tank oil level : Normal (checking by float switch)

(2) Control oil pressure : Normal (checking by press. switch)

(3) Blade angle : Neutral(AB = 0 °)

Allowable range : ± 3 degree

Ⅱ.2 Rated draft

The draft should be kept shown in " fig.- 1 " at running.

Fore draft : df ≧ 5.7 M

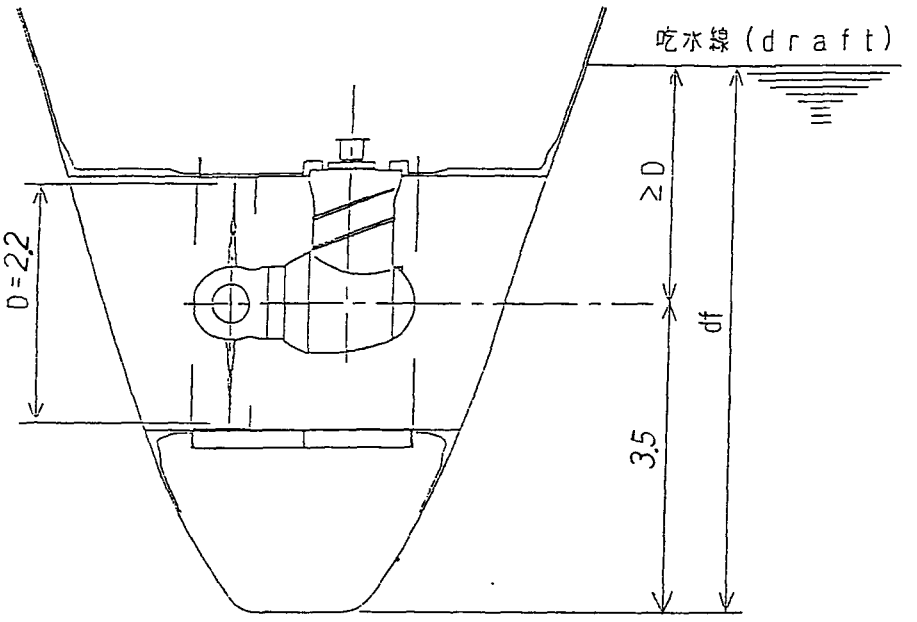

fig.- 1

Ⅱ.3 Oil temperature of the thruster

The kinematic coefficient of viscosity for thruster should be kept the range of 40 ～ 500 mm /s { cSt } at running.

The corresponding temperature to the forementioned viscosity is at about 10 ～ 60 ℃ for the gear oil ISO VG 100

Ⅲ. MAINTENANCE AND OVERHAUL

Ⅲ.1 Allowable range of starting torque : 11 ～ 19 N·m

Measuring procedure : Refer to INSTRUCTION BOOK Part 4. (Inspection) 4.1 fig-2, fig-3.

Ⅲ.2 Allowable range of input shaft axis displacement : ≦ 0.3 mm

Measuring procedure : Refer to INSTRUCTION BOOK Part 4. (Inspection) 4.1 fig-4.

Ⅲ.3 Allowable range of gear backlash : 0.30 ～ 1.18 mm

Measuring procedure : Refer to INSTRUCTION BOOK Part 4. (Inspection) 4.1 fig-4. R = 100.0 mm

Ⅲ.4 Fastening torque of main parts

Name of parts		Item	Fastening torque N・m { kgf・m }
Thruster	Blade bolt	3	1030 { 105.0 }
	Fixing bolt	15	1079 { 110.0 }
	Fixing bolt	31	2079 { 212.0 }
	Nut for bevel gear		2393 { 244.0 }
Flexible coupling			

Caution) (1) The parts number shown in list are found in the INSTRUCTION BOOK FIG-1 " THRUSTER ASSEMBLY " .

(2) Allowable range of fastening torque : -5～0 %

(3) The part of thread and seatface should be coated with MoS2 at fastening work.
But, the case of flexible coupling's bolt, MoS2 should be coated the part of thread only, the seatface must be not coated.

(MoS2 : Molly coat)

Ⅲ.5 Remachining of liner for shaft sealing device

In the case of that the oil leakage is happened from shaft sealing device by unusual wearing out of liner, remachining of the liner should be done for that repair.

Remachining allowable to be refered to "Table -1".

Then, supply interference to the sealing inside with spring force.

Table -1 unit : mm

Type	Outside dia. of liner	Remachining allowance max.(per.dia.)	Inside dia. of seal ring (incl. spring)	Interference of seal ring
KT - 157B3	260.0	1.5	256.0	4.0

※ Caution of liner remachining

(1) Roundness and cylindricity : 5/100 mm

(2) Roughness of liner surface : 1.5 s ～ 3.0 s

Instruction book

KAWASAKI KT-B
SIDE THRUSTER

KAWASAKI
HEAVY INDUSTRIES, LTD.

Contents

Page

General 1

Part 1. Operation and manipulation 3

1.1 Thruster operation limits 3

1.2 Operation manual 3

1.2.1 Operation of thruster 4

1.2.2 Stopping of thruster 5

Part 2. Construction and working mechanism 6

2.1 Thruster assembly 6

2.1.1 General 6

2.1.2 Propeller part 6

2.1.3 Power transmission gear 7

2.1.4 Oil feeding mechanism 8

2.1.5 Feed back mechanism 8

2.1.6 Shaft sealing device 9

2.2 Pitch control device 9

2.2.1 Remote control system 9

2.2.2 Hydraulic unit 9

2.2.3 Gravity tank 11

2.3 Flexible coupling 12

Part 3. Maintenance and checking 13

3.1 Maintenance and checking items 14

3.2 Trouble shooting guide (for thruster in operation) 17

Page

Part 4. Inspection 21

4.1 Docking inspection (Pre-disassembly inspection) 22

4.2 Inspection of parts upon disassembly 24

4.2.1 Thruster proper 24

4.2.2 Flexible coupling 25

4.3 Inspection after reassemble and restoration 26

4.4 Notification of inspection items to us 28

Part 5. Disassembly and reassemble procedure 29

5.1 Disassembly of thruster proper 29

5.1.1 Preparation for disassembly 29

5.1.2 Disassembly procedure 30

5.2 Reassemble of thruster proper 33

5.2.1 Preparation for reassemble 33

5.2.2 Cautions and hints on reassembly work 33

5.2.3 Measurement items to be taken during reassembly 34

5.3 Self-locking procedure 36

5.3.1 Propeller part 36

5.3.2 Propeller shaft part 37

5.3.3 Input shaft part 38

5.3.4 Flexible coupling 38

-Page

Part 6. Charging the system lubricating oil 39

6.1 Charging the entire unit with oil 39

6.2 Charging the servo cylinder with oil 39

6.3 Recommended brands of lubricating oil 40

6.4 Criterion of oil exchange 41

Part 7. Initial starting after installation 42

Part 8. Spare parts 44

Annexed drawings
1. THRUSTER ASSEMBLY
2. SKELETON DIAGRAM OF PIPING
3. SHAFT SEALING DEVICE
4. HYDRAULIC UNIT ASSEMBLY
5. DISK COUPLING
6. SF COUPLING

Remarks

This manual deals with general description on the thruster system. The contents are subject to change due to specification of job.

PREFACE

Read The Operation's and Foreman's Manual

This instruction manual provides important information concerning proper equipment operating, assembling and disassembling. The safety of yourself and others depends upon your care and judgment in the process of the working and properly performing required attention. Therefore, please take time to read this manual thoroughly, and keep it with the machine permanently.

Accuracy and Completeness

Although every effort has been made to ensure the accuracy and Completeness of this manual, Kawasaki cannot anticipate every possible circumstance, use or misuse of the equipment which might involve a potential hazard. Therefore, the warning and information presented in this manual may not be all inclusive. In addition to closely following Kawasaki's recommendations, your are encouraged to familiarize yourself with applicable industry safety guidelines, and exercise due care for the safety of yourself and others in using this equipment, including the wearing of appropriate protective apparel. Additionally, due to Kawasaki's continuing efforts to improve and refine its products, the specifications herein are subject to change.

Foreman Training

If after reading the installation manual you have additional questions about the use of this equipment, or if you need operator, foreman and worker training, please contact with KHI's branch or representative in the world.

The following symbols are present in this manual to signify to the operator, foreman and worker that proper guidelines, as set forth in the text, are designed to provide pertinent information.

⚠ **DANGER :** **THIS SYMBOL IDENTIFIES SPECIAL WARNINGS OR PROCEDURES WHICH, IF NOT STRICTLY OBSERVED, WILL RESULT IN SERIOUS INJURY OR DEATH.**

⚠ **WARNING :** **THIS SYMBOL IDENTIFIES SPECIAL WARNINGS OR PROCEDURES WHICH, IF NOT STRICTLY OBSERVED, COULD RESULT IN SERIOUS INJURY OR DEATH.**

⚠ **CAUTION :** **THIS SYMBOL IDENTIFIES SPECIAL INSTRUCTIONS OR PROCEDURES WHICH, IF NOT CORRECTLY FOLLOWED, MAY RESULT IN INJURY OR PROPERTY DAMAGE.**

⚠ **IMPORTANT :** **THIS SYMBOL IDENTIFIES SPECIAL INSTRUCTIONS OR PROCEDURES WHICH, IF NOT CORRECTLY FOLLOWED, COULD RESULT IN MACHINE DAMAGE.**

⚠ **NOTE :** **THIS SYMBOL IDENTIFIES SUPPLEMENTARY INFORMATION TO EMPHASIZE OR POINT OR PROCEDURE OR TO GIVE A TIP FOR EASIER INSTALLATION AND/OR OPERATION.**

General

The side thruster is a transverse propelling device with its propeller mounted in the lateral through tunnel in the hull such that the water jet generated by this propeller gives a lateral thrust to the hull. Thus facilitating the departure of the ship from and its coming alongside the pier. Also helping improve the ship's maneuverability when it is running at a low speed or in a narrow waterway.

Kawasaki's KT-B type side thruster is a controllable pitch thruster having incorporated in it a propeller pitch controlling mechanism. So planned that the propeller pitch can be remote-controlled from the control stand on the bridge.

This device is composed of the actuating section comprising a drive motor. Flexible coupling and thruster proper and the propeller pitch control device. Its features being as follows.

(1) Adoption of 4-bladed skewed controllable pitch propeller which is effective for reducing vibration.

(2) Highly rigid construction and compact design. Hence easy installation.

(3) Propeller pitch is controllable. This allows the use of a constant speed motor with its revolving direction fixed.

(4) The possibility of controlling propeller pitch also enables continuous and quick change of the thrust in either port or starboard direction.

(5) Easy operation for all operation controls from that for starting the motor to that for regulation of the propeller pitch are collectively arranged in the control stand on the bridge.

(6) The propeller blade are capable of dismantling in the thruster tunnel by means of removing the blade bolts.

The thruster can have its performance retained over a long period, if simple preoperational checking and the recommended routine maintenance and checking procedures are observed.

This manual is intended to give cautions and hints on the operation of the thruster to be observed as well as the maintenance and inspection standards.

⚠NOTE : THIS INSTRUCTION BOOK IS MENTIONED ABOUT STANDARD TYPE SIDE THRUSTER. FOR THE PROPER ITEMS OF EACH JOB, THE SEPARATE PAPER "TECHNICAL DATA" IS TO BE REFERRED.

Part 1. Operation and manipulation

1.1 Thruster operation limits

(1) Be sure to observe the specified draft.

(For the specified draft refer to the separate "Technical data.")

If the draft is insufficient, it is not only interferes with the thruster exhibiting the specified performance but also causes cavitation or air drawing, and the resultant vibration may possibly cause damage to the device.

(Air drawing can be detected as marked hunting of the drive motor ammeter.)

(2) ⚠ **IMPORTANT:WHEN THE SHIP'S SPEED IS MORE THAN 5 KNOTS, THE VIBRATION OF THE PROPELLER BY THE AIR DRAWING IS INCREASED. HENCE IT IS REQUIRED FOR THE THRUSTER NOTTO BE OPERATED MORE THAN 5 KNOTS.**

In some cases, it is also possible that air drawing is caused when the ship's speed is below 5 knots. If it is the case, the propeller pitch is to be so controlled that there is no risk of air drawing with the lower blade pitch zone.

1.2 Operation manual

The thruster operation procedure is as illustrated in the flow chart on the next page. Manipulation of the switches and thruster components is, as a rule, to be done from the control stand on the bridge. Hence the change over switch on the motor control panel should be set to "REMOTE".

The flow chart given is for the thruster of our standard type. Hence if the thruster specifications are different in any respect from our standard, be sure to carefully study them to find proper operation sequences for the remote control system and motor control panel.

1.2.1 Operation of thruster

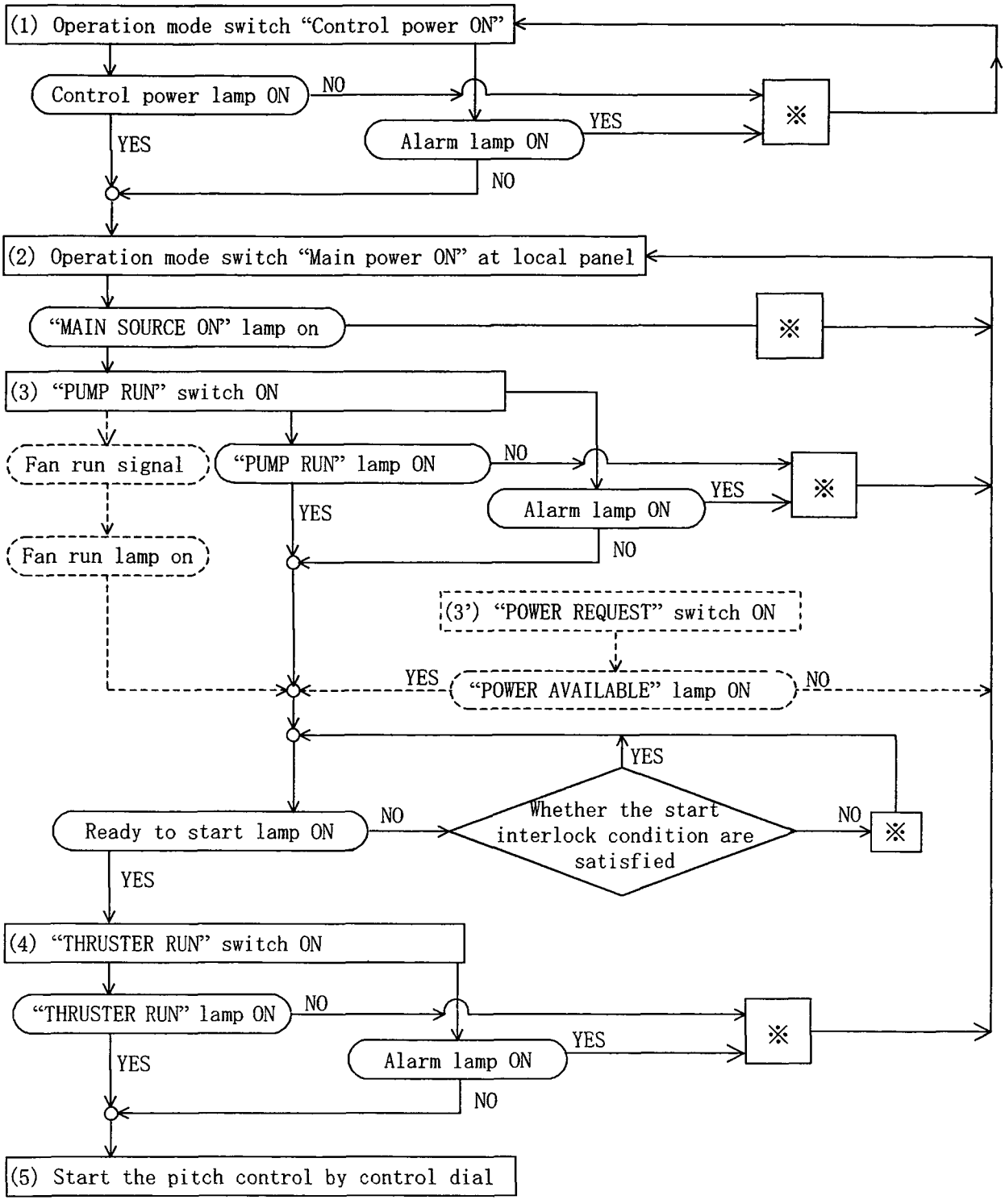

Note) (1) * is to be read as " Tracing cause and taking countermeasures "

(2) [ ] mark is optional item.

1.2.2 Stopping thruster

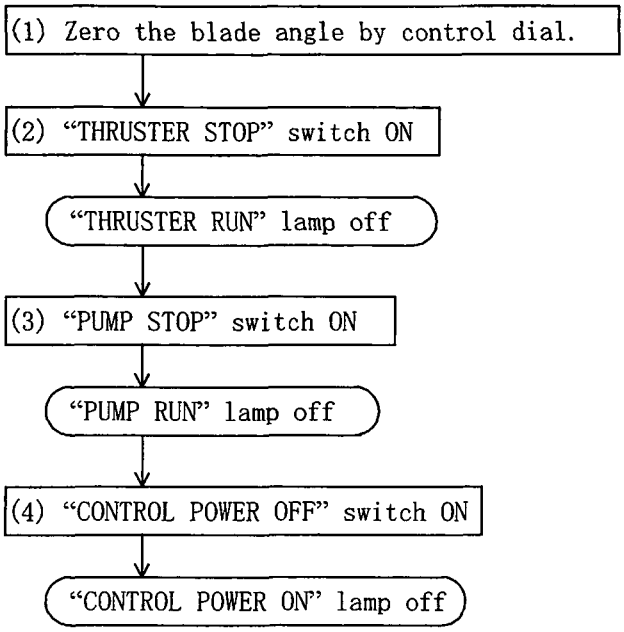

Part 2. Construction and working mechanism

2.1 Thruster assembly (See annexed drawing Fig-1)

2.1.1 General

The thruster assembly is composed of a tube, propeller part, power transmission gear, oil feeding mechanism and feed-back mechanism and the gear housing is fitted in the tube by means of the bolts.

The propeller part, too, is located in the tube.

The power is transmitted from the motor through the input shaft (23), bevel gear (16) and propeller shaft (32) to the propeller.

Propeller blade pitch is controlled by means of the hydraulic system. The propeller part and gear case are filled with "gravity oil" at a pressure somewhat higher than the draft of full load so as to ensure against ingress of sea water into the case interior even in the event of seal failure.

2.1.2 Propeller part

The propeller part is composed of propeller blades (1), propeller hub (6) and propeller pitch controlling mechanism. This propeller part is connected by bolting to the end face of the propeller shaft (32) such that the power is transmitted through a reamer pin to the propeller part.

The flange is covered with a corrosion-proof shaft hood (9) with an "O" ring used to seal against sea water.

In the propeller hub (6) the propeller blades moving mechanism is housed with the crank disks (4).

The hydraulic reaction of the propeller blades (1) are held by the bearing portion of hub while the centrifugal force is held by the thrust bearing of the hub and crank disks (4).

The propeller pitch control mechanism is made up of a hydraulic servo motor composed of cylinder portion of hub (6), crosshead piston (5), sliding blocks (7) and crank disks (4), and serves to convert the linear motion of the servo motor into a rotary movement of the crank disk.

This rotary movement is transmitted to the propeller blades for control of the propeller pitch by two pins.

"O" rings are used for sealing against sea water.

2.1.3 Power transmission gear

This is housed in the gear case and composed of an input shaft part, propeller shaft part and bevel gear, and is to serve for transmitting the prime mover output to the propeller.

The input shaft part has rationally arranged in it spherical roller bearings (21), (24) and thrust bearing (25), while two sets of the spherical roller bearing (12), (20) and thrust bearing (13), (17) are rationally arranged in the propeller shaft part.

The bevel gear is a right angle reduction gear, composed of a pinion gear shaped on one end of the input shaft (23) and a bevel gear (16) mounted on the propeller shaft. This serving for transmission of power under simultaneous reduction of the motor speed to the speed optimum for the propeller.

The bevel gear and individual bearings are to be lubricated by the gravity oil filling the gear case. This charge of gravity oil is sealed securely by the two oil seals of the input shaft part and the shaft sealing of the propeller shaft part.

2.1.4 Oil feeding mechanism

The oil feeding mechanism is made up of a oil tube (36), feed ring (18), oil entry tube (37) and the bore through the propeller shaft (32), and serves to lead the hydraulic oil from the hydraulic unit to the servo motor of the propeller section. The oil feed mechanism has a pair of bores for hydraulic oil so that when the hydraulic oil is supplied by either bore. The other one is used for discharging it.

The feed ring (18) houses the seal ring for preventing outflow of the hydraulic oil into the gear case. When the command to feed oil is given by the control dial on the bridge, the solenoid valve of the hydraulic unit is actuated and the hydraulic oil is supplied through the oil tube, feed ring and oil entry tube (bore through propeller shaft) to be supplied to the servo motor and the crosshead piston is displaced to the predetermined position.

2.1.5 Feed back mechanism

This is a mechanism for transmitting the blade angle signal to the blade angle transmitter (26) and remote control system, designed to detect the blade angle by the stroke of the oil entry tube (37) and inputting it as a stroke signal to the blade angle transmitter over the feed back lever (38) and chain (39).

This blade angle transmitter has a function of feeding back the blade angle to the remote control system. And detecting the blade angle as it is indicated on the blade angle indicator on the bridge and local indicator.

2.1.6 Shaft sealing device (See annexed drawing Fig-3.)

This is for sealing the gravity oil in the gear case against sea water, and is made up of three seal rings (6), intermediate rings (3) (4), flanged ring (2), and cover ring (5), and liner (1) that turns with the propeller shaft.

The clamp for each seal ring is fastened to fit tight on the inner periphery of the housing. Hence the clamp part is sufficiently sealed against oil as well as water.

The liner is made of a material highly resistant to corrosion and wear, and is fixed to the shaft hood. The clearance between liner and shaft is made to lead gravity oil to the propeller.

2.2 Pitch control device

The device is composed of a remote control system for controlling the propeller pitch and a hydraulic unit for regulating the blade angle.

2.2.1 Remote control system

The remote control system is of the electric control type, and serves to transmit the command to change propeller pitch given through the control dial on the bridge to the solenoid valve for the propeller blade angle to be adjusted accordingly. And also hold the propeller pitch. It also serves to indicate the actual blade angle on the blade angle indicator on the bridge. For further details of the remote control device refer to the separate drawing "Remote Control System".

2.2.2 Hydraulic unit (See annexed drawings Fig-2 and Fig-4.)

The hydraulic unit consists of a hydraulic pump, solenoid valve, valve manifold to which the cartridge valves are mounted having the following functions,

- Excess pressure relief, loading and unloading with the relief valve (2-7)
- Pilot pressure changing over for pitch control with the solenoid valves (2-3)
- Pressurized oil changing over to servo cylinder with logical cartridge valves (2-4)
- Checking of oil ways with check valve (2-18)

The oil of the gravity tank (4) is sucked by the hydraulic pump (2-1) through the strainer (2-6), and is pressurized, is delivered through the logic valves (2-4) which are controlled with the pressurized pilot oil by the solenoid operated valve.

When the command to change the propeller pitch is given, the port of the solenoid valve is opened, the pressurized pilot oil from the vent port of relief valve operates the logic valves to make oil circuits for moving the propeller pitch supplying the hydraulic oil to the servo cylinder. On reaching the propeller pitch to the set position the solenoid operated valve is returned to the neutral position to release the pressurized pilot oil to the pump suction lines to close all logical valves. Accordingly the oil from the pump is unloaded through the relief valve to the gear case.

The oil supplied to the thruster during holding of the propeller pitch or during pitch changing is filled with the gear case, and lubricates the bearings, gears etc. (Oil bath lubrication applied). After that it circulates back to the gravity tank. For protection of hydraulic unit a relief(2-7) is provided onto the manifold.

2.2.2-(1) Solenoid hydraulic operated valve (2-3)

This is a changeover valve for the pressurized pilot oil to the cartridge valves(2-4) which change over the hydraulic oil to the respective servo cylinders according to the command given by the remote control system.

(The solenoid hydraulic operated valves are hereinafter referred to generally as "solenoid valve".)

2.2.2-(2) Cartridge valve (2-4)

The cartridge valves serve to feed the hydraulic oil to the respective servo cylinders according to the pressurized pilot oil from solenoid valve (2-3).

2.2.2-(3) Pressure switch (2-8)

In order to operate the logical valves, a certain minimum of pilot pressure is required.

This pressure switch is for confirming the line pressure. If the line pressure is fallen below the required minimum, this pressure switch is actuated, and the alarm lamp on the bridge is lit. And also this switch is composed the start interlock of the drive motor. As an optional item the pressure switch is separately provided for interlocking circuit.

2.2.2-(4) Check valve (2-17, 2-18)

The check valves are fitted for the appropriate operation of the cartridge valves (2-4).

2.2.3 Gravity tank (See annexed drawing Fig-2)

The gravity tank (4) serves to apply the gravity oil pressure to the thruster proper so that the lubricating oil pressure in the gear case is kept higher than the pressure of the ambient sea water, and also is used as oil tank for the hydraulic unit.

The float switch (5) with two contacts constantly monitors the system oil level and lights up the alarm lamp on the bridge when it has fallen below the specified level and also is composed the start interlock of the drive motor.

2.3 Flexible coupling (See annexed drawing Fig-5, Fig-6.)

The flexible coupling is for transmitting the drive motor's output to the thruster and also serves to absorb the deviation between the motor axis and the input shaft axis of the thruster at the time of installation. The installation error of the flange distance. Motor - thruster alignment error due to deformation of the hull etc.

The type of the flexible coupling.

Disk coupling (Fig-5) : Flexibility by disk element

SF coupling (Fig-6) : Flexibility by grid member

Part 3. Maintenance and Checking

In the event of trouble or failure, take countermeasures without delay according to this manual, but KHI cannot anticipate every circumstances which might involve hazard.

So, to be described below are the recommended practice of "Routine maintenance and checking" and "Trouble shooting guide (for thruster in operation)".

Checking of the individual sections and parts is to be carried out periodically about the items enumerated in the table below under the head "checking items".

The inspection intervals are given as rough guide or hint, hence the proper interval is to be determined with the frequency of thruster operation taken into due consideration.

Fouling of the propeller blades or of the "water path" in the tube are bound to cause an undue drop in thruster performance, hence it is advisable to take every opportunity to clean them. For the items of docking maintenance and checking such as cleaning of water paths refer to "Part 4-4.1 Docking inspection".

(Itemized records shall be kept of every maintenance checking, and such records with the checking interval be reported to us together with the inspection findings on the items enumerated in Part 4 "Inspection".)

3.1 Maintenance / checking items

Checking item	Interval	Description
1. Abnormal noise, abnormal vibration.	Routine checking	Checking of drive motor, flexible coupling, thruster proper, hydraulic (pitch control oil) pump.
2. Checking of gravity tank oil level.	Monthly	Checking by the oil level gauge of the gravity tank.
(For routine level checking there is an "alarm lamp" provided on the bridge. Periodical checking by the said level gauge is, however, recommended. Checking by the "alarm lamp" on the bridge is to be done with the thruster operation mode switch set to "Control power ON". Checking over, the same switch set to "Control power off".)		
3. Cleaning of hydraulic unit strainer.	Monthly	The strainer is provided with a color indicator (black--normal, red-clogged).
4. Ingress of sea water into the gear case interior.		Take a sample from the oil sump in the bottom of the gear case using a hand pump, and check it.
5. Feeding grease.	Every 3 Months	1. Flexible coupling (SF coupling) (1) Grid element. 2. Plummer block. 3. Coupling of hydraulic oil pump. 4. Thruster proper : Input shaft's oil seal. 5. Motor : The parts deemed necessary.

Checking item	Interval	Description
6. Hydraulic oil pressure measurement. (With thruster in operation.)	Every 3 months	1. Measurement to be taken of the following by means of the hydraulic unit's pressure gauge. (1) Blade angle : 0° , 10° , max. (2) Turning direction : Right, left.
7. Frequency of solenoid valve actuation and oil temperature. (With thruster in operation.)	Every 3 months	1. Blade angle : 0° measuring time : 3 min. Actuation frequency to be measured under this condition. 2. Oil temperature to be measured with the thermometer attached to the hydraulic unit.
8. Propeller pitch and required input power. ⚠ NOTE: AFTER LONG TERM LAYING-UP MORE THAN TWO (2) MONTHS, INPUT POWER MIGHT BE INCREASED DUE TO FOULING BY MARINE GROWTH ON THE TUBE AND PROPELLER. IN CASE OF THAT, TO AVOID SUCH CASE OPERATE THE THRUSTER PERIODICALLY DURING LAYING -UP.	Twice / year	Measure the working current of the drive motor (rack scale reading) under the same conditions as given in item 6. (A sample of measurement recording sheet is given in Fig.1.)

Checking item	Interval	Description
9. Checking of remote control system.	Twice / year	1. Power source voltage. 2. Checking for loosening on terminals, relays and potentiometers. 3. Function of pilot lamps and buzzers by lamp / buzzer test switch.
10. Confirmation of blade anglle indicator.	Twice / year	1. Start the hydraulic (pitch control oil) pump, and adjust the control dial to "0". At the same time confirm that the indicating needle of the blade angle indicator and blade angle transmitter are at point "0".

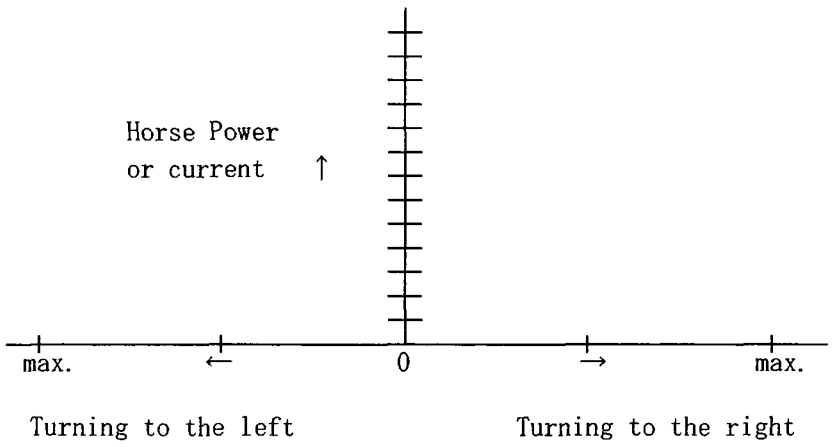

Fig. 1 Propeller pitch required input power

3.2 Trouble shooting guide (for thruster in operation)

In the event of trouble or failure, take countermeasures without delay according to this manual, but KHI cannot anticipate every circumstances which might involve hazard.

If the cause is traced, eliminate it before resuming thruster operation.

If the cause of the trouble cannot be detected after careful checking following the trouble-shooting guide below, please notify us without delay.

Check list of trouble-shooting guide

No.	Trouble	Check point		Cause	Countermeasure
1.	Drive motor / hydraulic (pitch control oil) pump wouldn`t start.	Are the set values for the power source voltage and staring timer normal?	YES NO	Shortage of supply voltage or timer setting error. Electric system out of order.	Check and repair. Check the electric system such as control panel, motor interior.
2.	The alarm lamps on the bridge light up and the buzzer sound.	Which lamps light up on the bridge and / or the local control panel?		(1) Over loading or tripping of motor.	1-1) Checking for sea floating objects sucked in by the propeller (e. g. rope), and cleaning. 1-2) Checking for deposits on propeller, tube inside wall etc. (parts in contact with sea water), and cleaning. 1-3) In case tripping, checking the condition of motor trip and trace the cause. 1-4) Checking for cause (5).
				(2) Overloading of motor for oil service pump. When the oil temperature has fallen to be below 0℃, the overloading might be occurred due to increasing of the resistance in the pipe.	2-1) Checking for clogging of suction strainer, and cleaning. 2-2) Checking for sticking of relief valve and check valve. 2-3) Checking for cause (5).
				(3) Drop of gravity tank oil level.	3-1) Checking for oil leakage out pipings, couplings etc. 3-2) Checking for oil leakage through input shaft oil seal. If oil leakage is detected, disassemble the seal by the procedure given in Part 5.5.1.2-(5), and check following items. (1) Oil seal damaged - Replace the broken part. (2) Sleeve worn off - Remachine the sleeve, finish with buffing without the trace of the cutting tool. Maximum remachining tolerance : 0.5 mm/diam. In case disassembly work has to be done at the sea, the work should be done as quickly as possible lest sea water should flow into the thruster interior. 3-3) Checking for oil floating on the sea around the thruster tube. If floating oil is detected, feed a proper amount of oil to the gravity tank and arrange for early docking and repair. 3-4) Checking for cause (5).

No.	Trouble	Check point		Cause	Countermeasure
				(4) Drop of hydraulic oil pressure.	4-1) Checking for air suction through suction piping and clogging of strainer. 4-2) Disassemble and check the valve and pressure switches in the hydraulic unit. (1) Loosening of the relief valve set pressure adjusting screw and damage of its spring (2) Sticking of check valve and damage of its spring (3) Are the pressure switch setting and function proper? 4-3) Checking for cause (5).
				(5) Trouble in electric system such as malfunctioning of relay.	Check for faults in the electric system such as loosening of terminal and timer missetting.
3.	Undue impact or vibration felt.	1. Is the drive motor normal?	YES	Trouble on thruster side.	Check about 2.
			NO	Internal trouble of motor.	Disassembly and checking.
		2. Is the flexible coupling normal?	YES		Check about 3.
			NO	Broken of grid member (disk coupling), element (SF coupling).	Disassemble, check, then stop thruster operation. And replace the broken parts.
		3. Measure the gear's backlash. (For the measuring method refer to Part 4, Inspection 4.1-(9).	In-creased	Wear of bearing in thruster.	If the measured value is in excess of the permissible limit, stop thruster operation, And arrange for docking repair (replacement of the worn out bearing) as soon as possible.
			Not in-creased	Damage to impeller due to hitting against foreign object.	Arrange for dry dock checking.
4.	Propeller pitch un-controllable.	1. Is the hydraulic (pitch control oil) pump running?	YES	Trouble in hydraulic system.	If the pump is normal, check about 2, and after.
			NO	Trouble in electric system.	Check electric system.
		2. Is it possible to pitch control with the solenoid valve spool changed over manually?	YES	(1) Trouble in electric system of remote control device.	1-1) Check electric system.
				(2) Damage to solenoid valve coil.	2-1) Disassemble and replace the bad component.
			NO	Trouble in hydraulic system.	Check about 3.

No.	Trouble	Check point		Cause	Countermeasure
		3. Is the hydraulic oil pressure normal?	YES	(1) Sticking of cartridge valve	Disassemble and check.
				(2) Loosening of relief valve adjusting screw	Readjustment of set pressure (For the adjusting procedure refer to Part 4.4.1-(10)).
				(3) Sticking of check valve	Disassemble and check if the relief valve set pressure is reached or exceeded.
				(4) Trouble inside thruster	Arrange for dry dock checking of feed-back and pitch-changing mechanisms.
			NO	(1) Air suction, clogging of filter and malfunction of valve	1-1) Take the countermeasures proposed under No.2-(4)(Drop of oil press.) 4-1), 4-2).
				(2) Trouble inside thruster	Dry dock for checking oil supply mechanism and servo cylinder.

Part 4. Inspection

In order to maintain smooth thruster operation it is highly important to carefully check every part of it at each docking and also keep running records of thruster operating conditions, to say nothing of daily maintenance/ checking. (See Part 3.).

To be described and explained here are the procedure of inspecting the thruster as a whole including the maintenance checking items requiring dry docking with the inspections involved divided into the following three.

(1) Dry dock inspection (pre-disassembly inspection)

(2) Disassembly (overhaul) inspection of parts

(3) Inspection after reassembly

Records should be kept of every inspection item involved.

Now described is the procedure of thruster overhaul.

⚠ IMPORTANT:OVERHAUL ACCORDING TO THE SCHEDULE GIVEN BELOW SHOULD BE DONE FOR CLOSE INSPECTION OF ITS COMPONENTS EVEN IF NOTHING WRONG HAS BEEN FOUND IN THE ROUTINE MAINTENANCE/CHECKING ETC.

NAME OF MACHINE	STANDARD INTERVAL	DESCRIPTION
1. THRUSTER PROPER	5 YEARS	DISASSEMBLY / CHECKING
2. FLEXIBLE COUPLING		
3. DRIVE MOTOR		MEASUREMENT OF INSULATION RESISTANCE. DISASSEMBLY / CHECKING
4. HYDRAULIC UNIT		DISASSEMBLY / CHECKING

4. 1 Dry dock inspection (pre-disassembly inspection)

If nothing abnormal is found in the routine maintenance/checking (See Part 3.), follow the inspection interval given in the table below.

Remark : (△) : Recommendation
○ : Necessary work

Inspection item	Method/procedure	Remedy	Inspection interval (year)	
			2～3	5
1. Cleaning of water paths, confirmation of locking and repair painting.	1. Removal of deposits such as marine growth on the inside wall of tube, gear case and propeller surface , and cleaning of the same. 2. Check locking of bolts in thruster, and repair if any of them is fallen off. 3. Repair painting of water-contact parts where paint coat is stripped or affected. (The water-contact parts are anti-corrosion painted except those made of stainless steel). 4. The inside of the fairing cover, which comes into contact with the sea water should be cleaned and repair-painted with particular care.		Each time the ship is docked.	
2. Replacement of anti-corrosive anode.	The anti-corrosive anode should be renewed each time the ship is docked. (The life of the anti-corrosive anode is taken to be about 2.5-years in case of the standard specification.)			
3. Check of system oil properties	Take a sample of the oil collecting on the bottom of the gear case using a hand pump, and check its properties. (This analysis is to be arranged for by the shipyard or the owner.)	Replace the charge of system oil, if it is contaminated with sea water etc. or found badly deteriorated.		
4. Check of blade angle indication at pitch transmitter	1. Start the oil service pump of the hydraulic unit. 2. Change the propeller pitch by means of the control dial on the bridge and check to confirm matching of the scale reading between the propeller hub and the pitch transmitter.	Do matching of scale readings with that of propeller hub as reference.		
5. Relief valve set pressure confirmation test	1. Start the hydraulic pump of the hydraulic unit. 2. Move the spool of the solenoid valve by hand to bring the servo piston to the end of the cylinder watching the pressure gauge. 3. Confirm the relief valve set pressure by means of the pressure gauge.	The relief valve set pressure is P=5.5MPa There is difference of more than 0.4MPa between the pressure gauges on the pump discharge side and that on the servo cylinder, hence be sure to do pressure setting on the pump discharge side.	○	○
6. Leakage test of likely components -1 Input shaft oil seal -2 Shaft sealing device -3 Propeller blade disc seal -4 Other seals	1. Remove the fairing cover. 2. Clean the gear case and propeller. 3. Confirm that the oil level in the gravity tank is as specified. 4. Leave it to stand for 1 day after confirmation of the oil level to check for oil leakage.	1. If oil leakage is detected, disassemble the parts involved, and replace the seal packing, if necessary. 2. Oil leakage through the oil seal assembly ... Replace the part/s found bad or displace the lip contact part. 3. Oil leakage through shaft water seal ... Replace the part/s found bad or re-machine the liner. (Exchange the oil of shaft sealing device.) ※Possible for KT-157B type and over to replace seal rings by the way of bonding. 4. Feed grease to the input shaft oil seal, regardless of oil leakage.	Each time the ship is docked.	
7. Measurement of backlash	1. Attach a lever to the coupling as same way for the measurement of the starting torque. 2. Drive a wooden wedge between the propeller blade and the tube in order to lock the propeller against rotation. (Remove the wedge after measurement.) 3. Set a dial gauge on the lever of the coupling and move the coupling to measure the backlash. (See Fig. 4.)	1. Record the measured values. 2. For the permissible limit refer to the “Technical data”.	○	○

Inspection item	Method/procedure	Remedy	Inspection interval (year)	
			2～3	5
8. Measurement of starting torque	1. Remove the flexible coupling. 2. Attach a lever to the coupling as shown in Fig. 2 and measure the starting torque. 3. The starting torque can be measured, if so desired, with the flexible coupling connected as shown in Fig. 3.	1. Record the measured values. 2. For the permissible limit for starting torque refer to "Technical data". 3. The values measured with the coupling connected provide good references for later measurements under the same condition. They are, however, to be taken as mere guide for they include the motor starting torque.	(△)	○
9. Measurement of input shaft displacement	1. Remove the flexible coupling and attach an eye bolt to the coupling. (Do this with the coupling retaining plate fitted.) 2. Pull up the coupling and measure the displacement with a dial gauge. (See Fig. 4.)	1. Record the measured values. 2. For the permissible limit refer to the "Technical data"	(△)	○
10. Checking of wear of gear tooth face	1. Let out the system oil in the thruster using a hand pump or through the drain hole in the propeller hub. 2. Open the checking cover and check meshing of the gears inside.	Contact us if there is any abnormal indication such as pitching or scouring.	(△)	○
11. Measurement of oil feed ring - seal ring clearance	1. Completely drain the system oil, and remove the gear case cap. 2. Remove the return lever and oil tube and disassemble the feed ring. 3. Measure the dimensions to be controlled. (See the sketch on the right.)	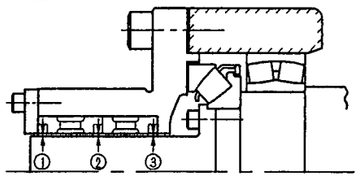 Record the measured values.		○
12. Complete overhaul				○

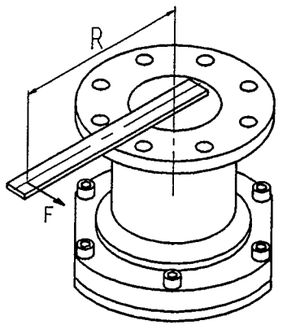

F···Measure with a tensionmeter

Fig. 2 Procedure of measuring starting torque

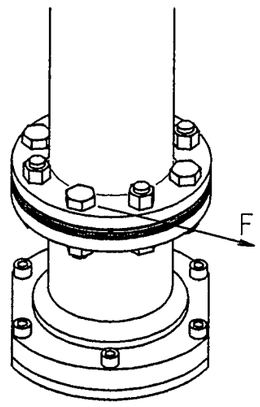

Fig. 3 Procedure of measuring starting torque

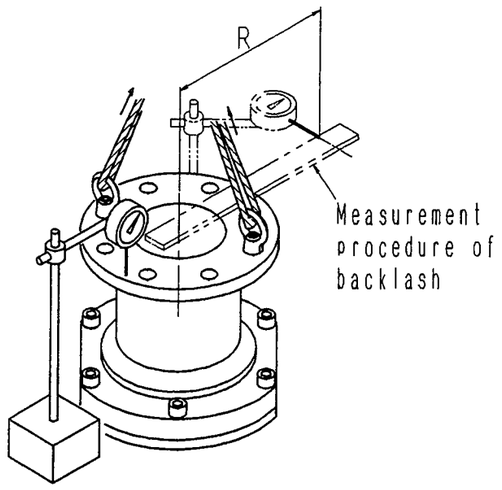

Fig. 4 Procedure of measuring input shaft displacement

4.2 Inspection of parts upon disassembly

Do inspection of the following parts when the thruster proper and flexible coupling are disassembled.

If any of them is found damaged, please notify us without delay.

4.2.1 Thruster proper

Inspection item	Inspection point	Action to be taken
1. Measurement of clearance	1. Feed ring - seal ring clearances 2. Clearance between crank disk and bearing of hub. 3. Clearance between slide block, crank disk pin and crosshead piston.	Record the measured values.
2. Color checking	1. Rounded root of propeller shaft flange and spline 2. Input shaft keyway 3. Entire gear tooth face, and gear wheel spline 4. Journal of propeller blade	If any defect is discovered, please notify us without delay and do necessary preparation for replacement of the part/s involved.
3. Wear of and damage to rotary part	1. Lip-contact part of the sleeve for input shaft oil seal	Remachine the liner.
	2. Lip-contact part of shaft sealing liner	Remachine the liner.
	3. Contact surfaces of inner, outer race and roller	Replace the parts affected.
4. Condition of gear tooth face	Tooth bearing and tooth face condition of pinion gear and bevel gear	Repair or replace.

Inspection item	Inspection point	Action to be taken
5. Damage to sliding part	1. Inside of propeller hub. 2. Sliding surface of crosshead piston 3. Sliding surface of crank disk pin and slide block. 4. Sliding surface of oil entry tube.	Record or replace.
6. Packing for sealing and oil seal	1. The packing for sealing ("0" ring)should be replaced each time the assembly is disassembled. 2. Oil seal : Check the lip etc. and replace the seal if anything wrong is detected. The standard replacement interval for oil seal is 4 years.	

4.2.2 Flexible coupling

Type	Inspection item	Action to be taken
Disk	1. Checking of the crack and/or abnormal injuries on the disk element.	Replace the disk element.
SF	2. Checking of the crack and/or abnormal injuries on the grid member.	Replace the disk grid member.

4.3 Inspection after assembly and restoration

When any component of the thruster has been disassembled for checking and some part has been replaced, do inspection on the following items and record the results or measured values.

Inspection item	Method / procedure	Action to be taken
1. Measurement of starting torque	See Part 4. 4.1-7.	Record the measured values and compare them with the values before assembly.
2. Measurement of input shaft displacement	See Part 4. 4.1-8.	
3. Measurement of gear backlash	See Part 4. 4.1-9.	
4. Oil leakage test of shaft sealing	See 4. 3.-(1).	Trace for the cause and replace seal rings etc.
5. Matching of pitch scale reading	See Part 4. 4.1-3.	
6. Oil leakage test of thruster as a whole	See Part 4. 4.1-4.	Trace for the cause and replace seal packing.
7. Checking of contact pattern of gear tooth	See 4. 3.-(2).	Send the test record to us.

⚠ **IMPORTANT :**

CHECK THE CONTACT PATTERN OF THE GEAR TOOTH EACH TIME AFTER REPLACEMENT OF THE INPUT SHAFT, BEVEL WHEEL AS WELL AS AFTER REPLACEMENT OF ANY OF THE BEARINGS FOR THE INPUT AND PROPELLER SHAFTINGS.

4.3-(1) Procedure for oil leakage test of shaft sealing

(-1) Remove the drain plug under the intermediate ring (3)

(-2) Feed oil from the gravity tank to the thruster proper, and keep the oil level in the tank at the specified Level.

(-3) With the oil in the tank kept at the specified level, leave it to stand for 8 hours and then check for leakage through the drain hole in the intermediate ring (3).

(-4) After the oil leakage test screw in the drain plug, remove the oil inlet plug and fill in the lubricating oil between the seal rings #2 and #3.

(-5) Lock the oil inlet plug and drain plug. The oil leakage test is now over.

If the oil leakage out of the thruster (at various parts of it) in the step (-3) of this test, the "oil leakage test of the thruster as a whole" can also be done simultaneously.

4.3-(2) Procedure of checking gear tooth hearing

This is to be done in the course of assembly.

This means that it is to be done with the input shafting fitted with the coupling and coupling retaining plate, and with propeller shafting "ready for fitting" with the feed oil ring assembly.

(-1) Do tooth bearing adjustment for the input and propeller shaftings using the provided shims.

The backlash adjustment can also be done simultaneously.

(This adjustment is to be done with the input shaft lifted.)

(-2) Adjustment over, pull the input shafting out from the inboard side and coat the pinion gear with red lead.

(-3) Set the shafting in the thruster, turn it with the shaft lifted several turns and then pull out the shafting.

(-4) Take a print of the pinion gear tooth bearing using an adhesive tape or the like, and add it to the test record.

(-5) Then incorporate the shafting definitively, and checking of tooth bearing is now over.

4.4 Notification of inspection items to us

After completion of the inspections 4.1, 4.2 and 4.3 mentioned above, notify us of the respective inspection records.

-1) Date and place of inspection

-2) Kinds of inspection .... Routine dry dock inspection (each time the ship is docked), inspections after disassembly and reassembly.

-3) Inspection items, actions taken and measure values These should be notified to us without fail, the following in particular.

(1) Measured value of starting torque

(2) Measured value of backlash

(3) Measured displacement of input shaft

(4) Feed ring - seal ring clearance

(5) Records of tooth bearing

-4) Details of routine maintenance/checking and checking interval

-5) Special data

(1) Total running hours of the thruster

(2) Troubles experienced, if any, with description of each case

(3) Others

Part 5. Disassembly and reassembly procedure

5.1 Disassembly of thruster proper

5.1.1 Preparation for disassembly

(-1) Set a trolley

(The main components of the thruster are to be taken outboard in the way illustrated in Fig.-7, hence a trolley or a proper substitute should be provided.)

(-2) Have ready the required special disassembly tools and seal packings for the individual joints.

- Special tools..... See the annexed "List of special tools"
- Seal packings..... See the annexed "List of spare parts"

(-3) Provide an oil pan for receiving the oil collecting inside which will flow out as the thruster is disassembled.

(-4) Do pre-disassembly inspection (Part 4. 4.1) and record the result itemize.

(-5) Set the propeller blade as illustrated in Fig.-6, and let oil out using a hand pump or through the drain hole in the propeller hub.

(-6) Check the match-marks in the joints. (Match-marks are stamped at each joint before shipment from the shop).

(-7) Remove the gear case Cap.

5.1.2 Disassembly procedure (Annexed drawings Fig-1 and Fig-3)

5.1.2.-(1) Dismantling the propeller shaft

Remove the gear case cap (19)

↓

Dismantle the follower ring from the oil entry tube (37).

↓

Disconnect the chain (39) from the return lever (38) and sprocket.

↓

Disconnect the oil tubes (38) from the feed ring assembly (18) and draw out from the gear case (22).

↓

Dismantle and disassemble the feed ring.

↓

Remove the fairing cover (33).

↓

Hang the propeller hub (6) with rope.

↓

Fit the suspension tool onto the bearing housing (11).

↓

Draw out the propeller shaft (32), bearing housing (11) and propeller part from the tunnel.

↓

Disconnect the propeller hub part from the shaft.

↓

Dismantle the liner (Fig-3-(1)) of shaft sealing (10) from the shaft hood (9) and fit the mounting strap (Fig-3-(15)) on the shaft sealing device.

↓

Dismount the inner rase of the thrust bearing (17) and radial bearing (20).

↓

Remove the nut for the bevel wheel.

↓

Pull out the bevel wheel (16).

↓

Dismount the thrust bearing (13).

↓

Loosen the bolts on the flange ring (Fig-3-(2)) of the shaft sealing (10).

↓

Drawn out the bearing housing (11) toward the bevel wheel.

↓

Dismount the radial bearing (12)

↓

Pull out the shaft sealing (10) from the propeller shaft (32).

↓

Take off the shaft hood (9).

Finished

Ref. fig.7

5.1.2.-(2) Disassemble the feed ring

Dismantle the feed ring (18) with the sea-rings and outer ring of the thrust bearing.

↓

Disassemble the feed ring (18) and take out the sealing rings from the feed ring casing.

Note: Measure clearance between sealing and seal shaft.

5.1.2.-(3)' Disassembling the propeller hut (Ref. fig.8)

Pull out the follower ring from the oil entry tube (37).

↓

Disassemble the feed ring part.

↓

Hang the propeller hub (6) with rope.

↓

Loosen the fixing bolts (34).

↓

Draw out the propeller hub part from the tunnel.

↓

Remove the oil entry tube (37) from the hub.

↓

Full out the crosshead piston (5) form the hub.

↓

Remove the sliding block (7) from the crank disk (4).

↓

Dismantling the propeller blade (1).

↓

Take out the crank disk (4) from the propeller hub (6).

Finished

5.1.2.-(4) Dismantling the propeller blade

Screw out the propeller blade bolt (3), and remove the propeller blade (1).
Pins (2) will leave on the crank disk (4).

5.1.2-(5) Disassembly of input shaft part

Remove the flexible coupling (28) and drive motor or intermediate shaft.

Disconnect the connection piping of outward

Attach the eye bolt to the coupling (28), lift the input shaft part as a whole, and haul it toward the inboard side.

(See Fig.5)

Pull out the sleeve for oil seal (29).

Pull out the spring housing above the thrust bearing.

⚠ NOTE :BE CAREFUL NOT TO LOOSE THE SPRING IN THE HOUSING.

Displace the bearing housing (30) toward the pinion side.

Remove the clamping nuts.

Pull out the thrust bearing (25) and spherical roller bearing (24).

Pull the bearing housing (30) out of the shaft.

Remove the bearing stopper.

Pull out the spherical roller bearing (24).
Disassembly is now over.

5.1.2-(6) Disassembly of shaft sealing (Annexed drawing Fig-3)

Remove the mounting strap (15) and pull out the liner (1).

Take out the seal rings (6), while disassembling the cover ring (5) and intermediate ring (3), (4).

Examine the liner (1) and seal rings (6) and then refit them in place.

⚠ IMPORTANT :

1) POSSIBLE FOR KT-157B TYPE AND OVER TO REPLACE THE SEAL RINGS BY THE WAY OF BONDING>
2) IN REFITTING THEM, FILL GREASE BETWEEN THE SEAL RINGS #1 AND #2.
3) DRAIN THE CONTAMINATED OIL FROM THE DRAIN PLUG BETWEEN THE SEAL #2 AND #3. AND FILL THE NEW OIL INTO THE SAME SPARE THROUGH THE FILLING PLUG.
4) AFTER RESTORATION, SET THE LINER USING THE LINER
FIXER, AND HAVE THE ENTIRE SHAFT SEALING ASSEMBLY

5.1.2-(7) Disassembly of oil seal assembly only

Remove the pipe coupling-with-stuffing box (27).

Remove the coupling retaining plate.

Pull the coupling out of the shaft.

Remove the oil seal cover.

Remove the shaft key.

Pull out the stuffing box (27).
(The oil seal (29) is housed in the stuffing box.)

Take out the oil seal (29).

⚠ NOTE : CHECK THE OIL SEAL AND SLEEVE.

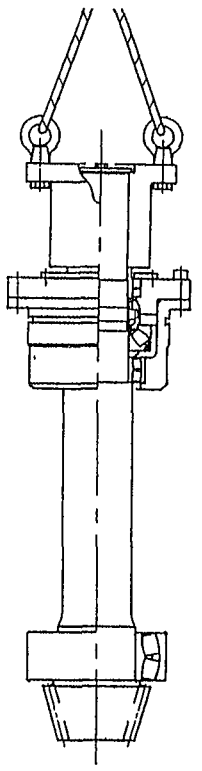

fig-5

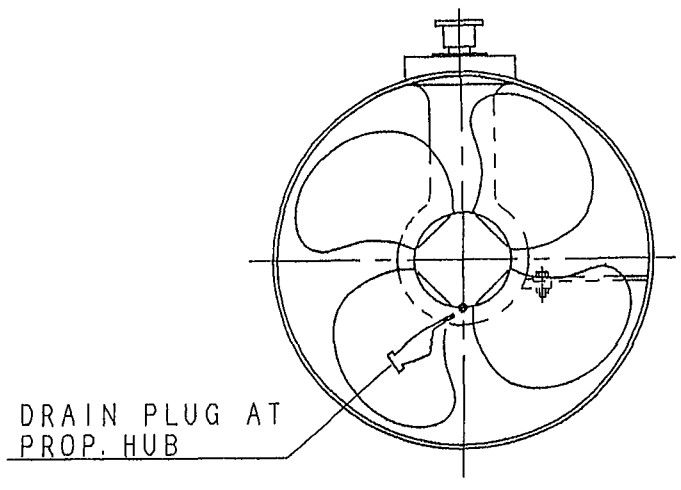

fig-6

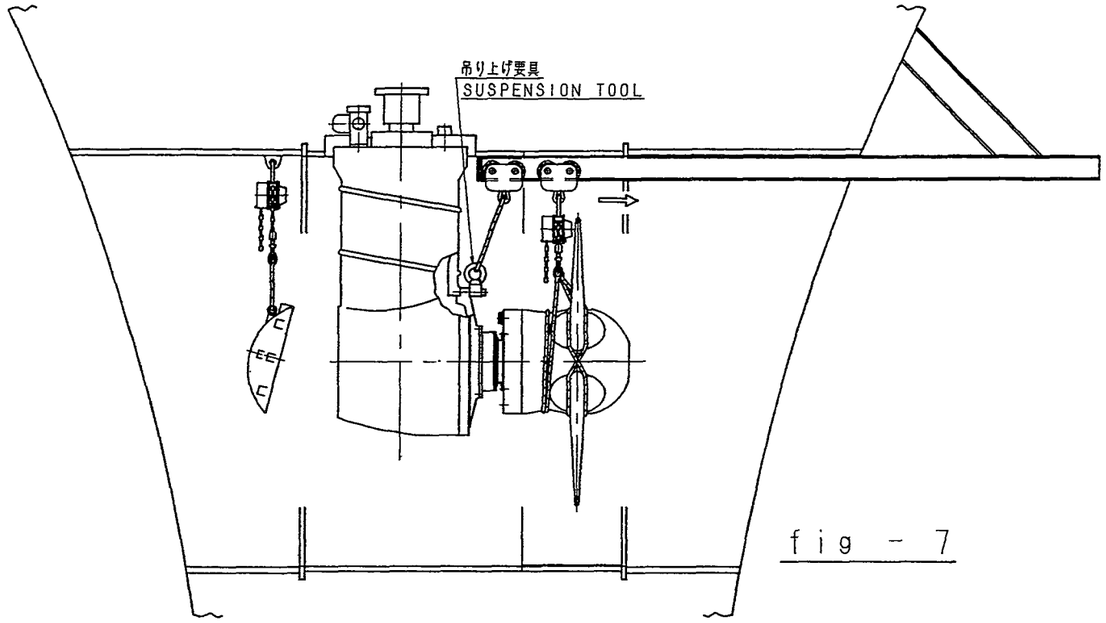

fig - 7

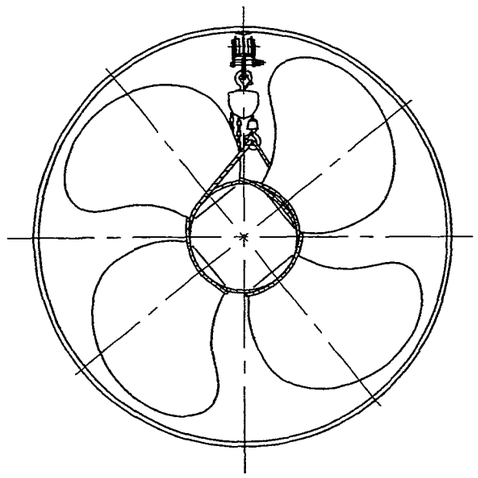

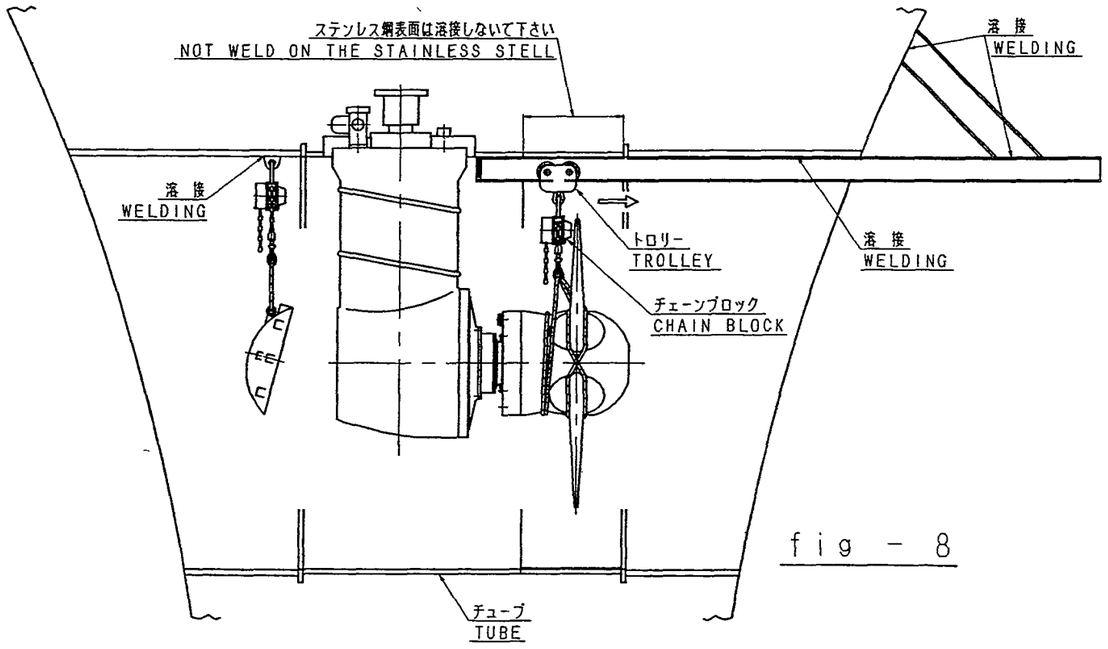

fig - 8

MASS OF PROPELLER PARTS & PROPLER SHAFT

(kg)

MODEL	MASS OF PROP. PART	MASS OF PROP & SHAFT
KT- 32B, B3	140	290
KT- 43B1	170	320
KT- 55B1, B3	250	470
KT- 72B1, B3	360	640
KT- 88B, B3	640	1200
KT-105B1, B3	750	1300

(kg)

MODEL	MASS OF PROP. PART	MASS OF PROP & SHAFT
KT-130B1, B3	900	1590
KT-157B1, B3	1380	2390
KT-187B1, B3	1620	2990
KT-219B2	1840	3530
KT-219B1, B3	2050	3730
KT-255B1, B3	2680	4980
KT-300B1, B3	3840	7390

NOTE

CHAIN BLOCK, A TROLLEY, BEAM AND EYE PLATE, TO BE PREPARED BY YARD.
THE SUSPENSION TOOL IS TO BE STORED ONBOARD AS THE SPECIAL TOOL.

5.2 Reassembly of thruster proper

5.2.1 Preparation for reassembly

(-1) Inspect the individual disassembled parts in accordance with Part 4.4.2.2. The parts saved for reuse after repair should be replaced at the next docking.

(-2) Be sure to clean all parts thoroughly before they are incorporated.

5.2.2 Cautions and hints on reassembly work

For reassembly the described procedure for disassembly can be simply reversed. To be observed are, however, the following.

(-1) Check the match-marks for each joint before incorporating the individual parts.

(-2) In reassembling, be careful to ensure against ingress of dust etc. into the thruster interior.

(-3) Be sure to observe the specified fastening torque in fastening the key bolts and nuts. (For the fastening torque refer to the annexed "Technical data.")
Every key set of bolt and nut has stamped on it match-marks.
Which are to match when the nut is screwed up with the specified torque.

⚠ **IMPORTANT : THE DEFINED FASTENING TORQUE IS TO BE STRICTLY OBSERVED.**

(-4) The bolts and nuts set inside the thruster should be locked after fastening without fail before the next step is proceeded with. (For the locking procedure refer to Part 5. 5.5.)

(-5) Reassembly over, do inspection in accordance with Part 4. 4.3 "Inspection after reassembly and restoration", and record the result.

(-6) Lock the bolts on the outside of the thruster.
Reassembly is now over.

* Parts to be greased

(a) Shaft sealing/seal ring part

(b) Input shaft oil seal part

5.2.3 Measurements to be taken during reassembly

In the course of reassembly measurement should be taken of the following, and the result recorded without fail.

(1) Shaft sealing device

(-1) Measurement of fitting dimensions

Item	Tolerance
1. Eccentricity against shaft axis.	±0.08 mm
2. Squareness (Dial gauge reading)	0.15mm max.

(-2) Measurements to be taken while setting the liner.

Take measurement of the following. turning the propeller shaft.

Procedure of measurement		Measurement to be taken	Tolerance
(A)	Clearance measurement at 4 peripheral points (by the use of a feeler gauge or wooden wedge)	Difference between maximum and minimum clearances	0.3mm max.
(B)	Measurement of liner inclination error (by the use of a dial gauge)	Dial gauge reading	0.1mm max.
(C)	Measurement of centering of liner (by the use of a dial gauge)	Dial gauge reading	0.1mm max.

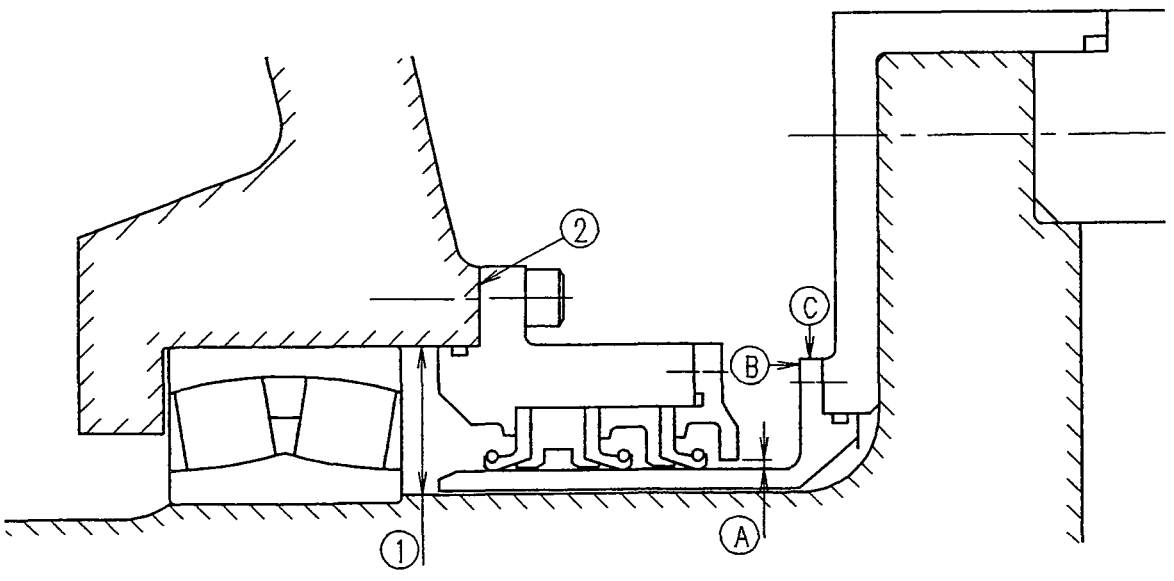

(2) Feed ring part

Measurement of eccentricity of feed shaft

(Tolerance: 5/100 mm)

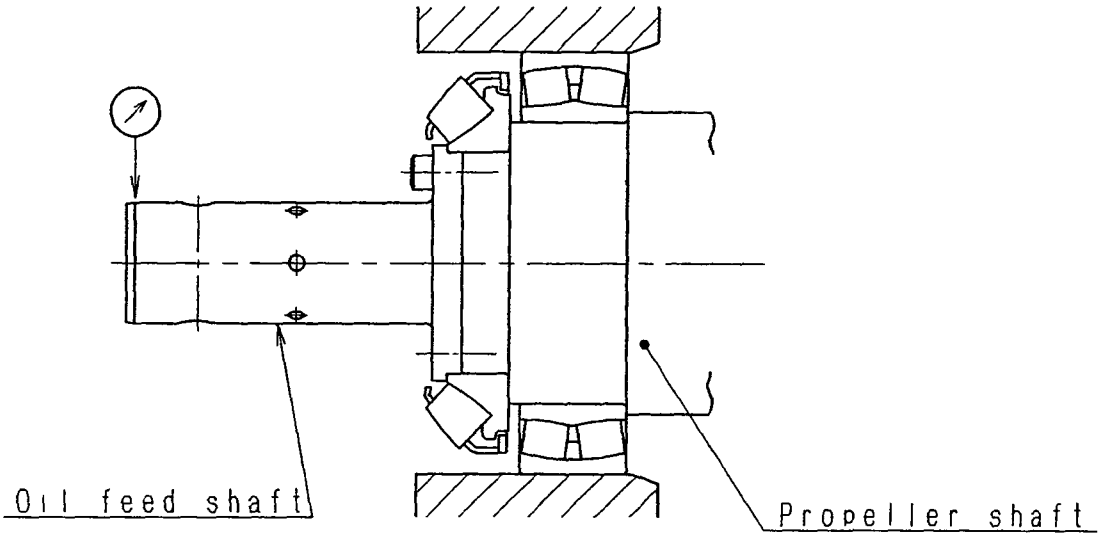

5.3 Locking procedure

(-1) Dropping off of any bolt, nut, pin or the like during thruster operation possibly causes a serious accident. These should, therefore, be locked securely by the respective methods recommended in the table below.

To ensure perfect locking of all these, careful checking should be made in the course of reassembly as well as at every dry dock inspection.

(-2) Locking method

The recommended means of locking for the rotary and stationary parts are as follows.

Rotary part Wire, locking plate

Stationary part Wire

(A) and (B) in the "Remark" column of the table below indicate "rotary part" and "stationary part" respectively.

5.3.1 Propeller part

No.	Item	Related part	Locking method	Remarks
1	Hexagon headed bolt on the blade bolt	Blade bolt	Bar and Welding	A
2	Hexagon socket head bolt	Oil entry tube flange	Wire	
3	Coupling bolt	Propeller hub propeller shaft	Wire	
4	Plug	Propeller hub	Punching	
5	Hexagon headed bolt	Shaft sealing liner	Wire	

5.3.2 Propeller shaft

No.	Item	Related part	Locking method	Remarks
1	Bevel wheel fastening	Bevel wheel	Locking plate	A
2	Hexagon socket head bolt	Locking plate	Wire	A
3	Ditto	Propeller shaft Feed shaft	Wire	A
4	Pin	Oil entry tube Follower ring Return lever	Split pin	A
5	Hexagon head bolt plug Hexagon socket bolt	Shaft sealing	Wire	B
6	Hexagon socket head bolt	Bearing housing Fairing cover	Wire & spot welding	B
7	Plug	Gear case cap	Punching	B
8	Hexagon socket head bolt	Checking cover	Spot welding	B
9	Pipe connector	Oil tube	Locking plate + spot welding	B
10	Hexagon socket head bolt	Cover of feed ring	Wire	B
11	Ditto	Gear case cap	Spot welding with plate	B
12	Ditto	Support chain holder	Wire	B

5.3.3 Input shafting

No.	Item	Related part	Locking method	Remarks
1	Hexagon socket head bolt	Bearing housing, staffing box	Wire	B
2	Hexagon headed bolt	Oil seal cover	Wire	B
		Coupling stopper (plate)	Wire	A
3	Hexagon socket head bolt	Blade angle transmitter	Wire	B

5.3.4 Flexible coupling

No.	Item	Related part	Locking method	Remarks
1	Disk coupling ; reamer bolt	Coupling	U-nut	A

Part 6. Charging the system lubricating oil

The unit as well as the servo cylinder should be charged with oil after reassembly of the thruster.

6.1 Charging the unit with oil... This is to be done by the route indicated by the thick line in the sketch below.

-1 Feeding : Through the feed hole of the gravity tank.

-2 Air venting : Through the plugs in the propeller hub and thruster proper respectively.

6.2 Charging the servo cylinder with oil... This is to be done by the route indicated by the dashed line in the sketch below.

-1 Fill the gravity tank with oil.

-2 Start the hydraulic (pitch control oil) pump of the hydraulic unit. Manipulate the solenoid valve (by hand) for air extracting through the propeller hub plug.

-3 Manipulate the solenoid valve for pitch changing several times, then air extracting the other cylinder room and charge it with oil.

-4 Air extracting the tube to and from the pressure gauge so that it is filled with oil. Oil charging of the entire system is now over.

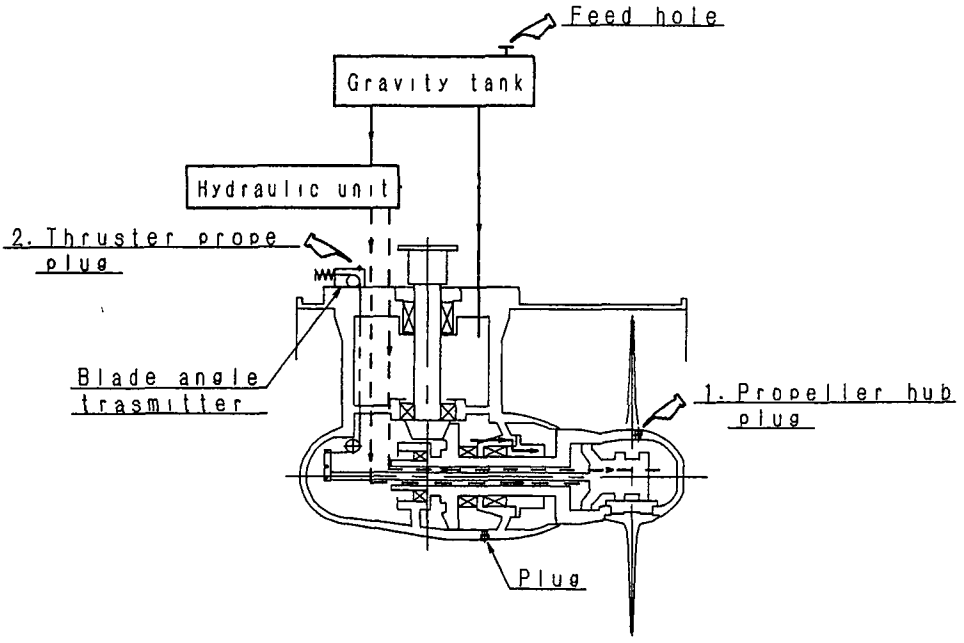

6.3 Recommended brands of lubricant

6.3 (1) Thruster proper (Including gravity tank)

Oil used : Gear oil ISO VG100 or equivalent

Required amount of oil Unit: liter

* The amount of oil given does not include that required to fill the piping.

Type	Thruster proper	Gravity tank	Hydraulic unit	Total amount
KT - 32B, B3	45	50	5	100
KT - 43B1	50	50	5	105
KT - 55B1, B3	95	50	5	150
KT - 72B1, B3	125	50	5	180
KT - 88B, B3	210	50	5	265
KT - 105B1, B3	220	50	5	275
KT - 130B1, B3	290	50	5	345
KT - 157B1, B3	350	80	10	440
KT - 187B1, B3	490	80	10	580
KT - 219B2	560	80	10	650
KT - 219B1, B3	560	110	10	680
KT - 255B1, B3	700	110	10	820
KT - 300B1, B3	990	110	10	1110

6.3 (2) Recommended brands (refer to the table as below)

RECOMMENDED OIL AND GREASE FOB THRUSTER

Oil maker	Gear oil	Grease
BP	ENERGOL GR-XP 100	ENERGREASE MP-MG2
ExxonMobil	SPARTAN EP 100 MOBIL GEAR 627	BEACON EP2 MOBILUX EP2
Castrol	CASTROL ALPHA SP 100	CASTROL SPHEEROL SX2
ChevronTexaco	MEROPA 100 CHEVRON GEAR COMPOUND EP 100	MULTIFAK EP2 CHEVRON DURA-LITH GREASE EP 2
COSMO	COSMO GEAR SE 100	COSMO GREASE DYNAMAX EP NO. 2
SHELL	SHELL OMARA OIL 100	SHELL ALVANIA EP GREASE2
IDEMITSU	DAPHNE SUPER GEAR OIL 100	DAPHNE EPONEX SR NO. 2
NIPPON OIL	BONNOC M100	EPNOC GREASE AP(N)2
JAPAN ENERGY	JOMO REDUCTUS 100	JOMO LISONIX GREASE EP-2
ASHLAND	HYDROX 8EP	

⚠ **NOTE :**

1. **IF OTHER BRANDS WOULD BE USED, PLEASE CONTACT US FOR CONSULTING.**
2. **GREASE IS APPLIED FOR FLEXIBLE COUPLING AND OIL SEAL, ETC.**
3. **IF THE VESSEL MAINLY WILL BE VOYAGED IN THE LOWER TEMPERATURE AREA, SACH AS NORTH SEA ZONE, LOW VISCOSITY OIL ISO VG 46 OR 68 GEAR OIL SHOULD BE USED.**

6.4 Criterion of oil exchange

Our criterion of the oil exchange is below.

Variation of viscosity (40℃)	±10%
Water contamination	Max. 1%
Oxidation	Max. +1 mgKOH/g
Contamination	Max. 30mg/100ml

Part 7. Initial starting after installation(Commissioning)

Initial starting after installation (commissioning) should be carried out after due adjustment and checking of the individual components in the following way.

In starting, every manipulation involved should be performed with a great care.

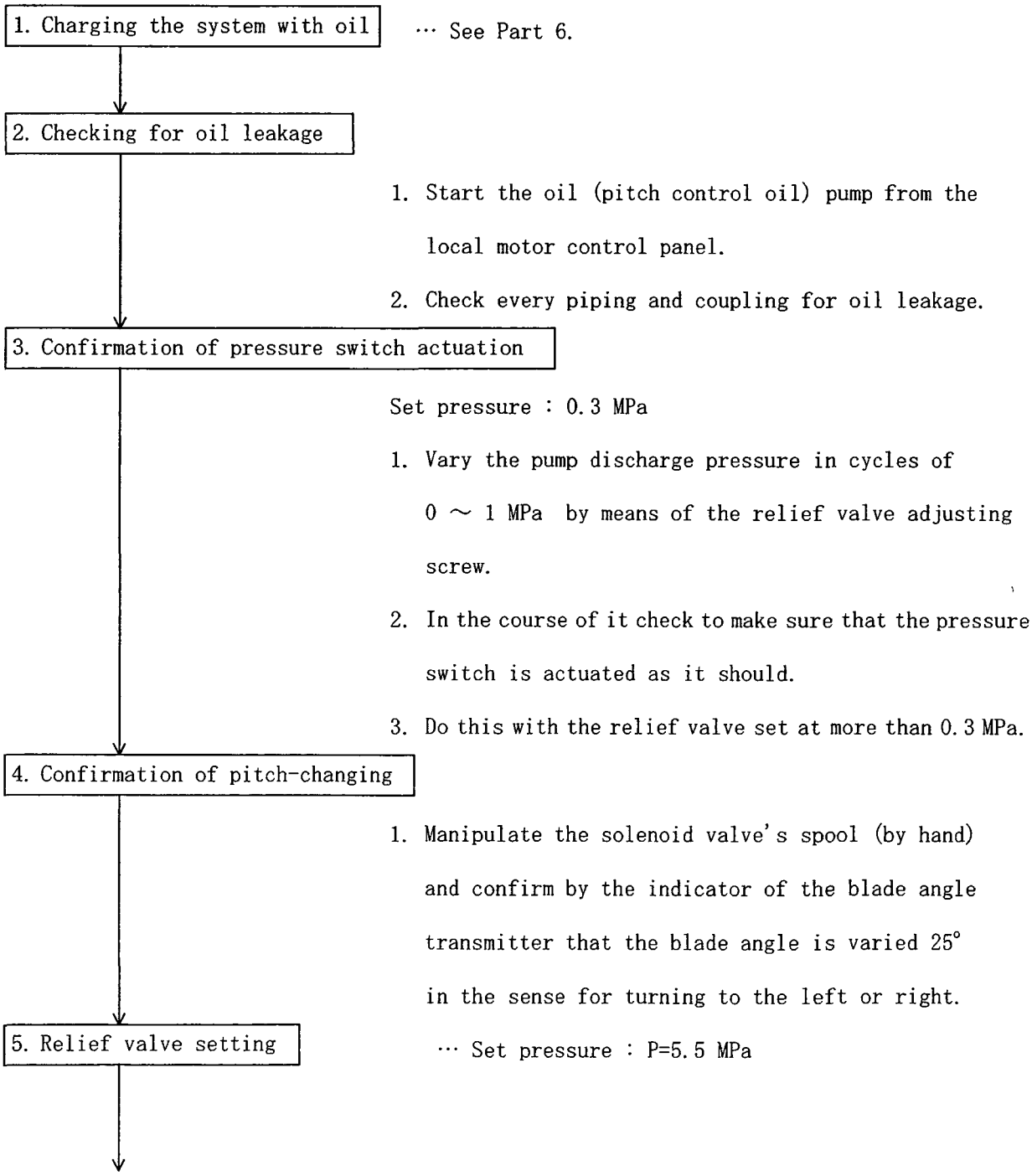

⚠ **IMPORTANT : TOW(2) NUTS ON THE ADJUSTING ROD ARE PROVIDED, ONE FOR LOCKING OF THE ROD AFTER SETTING OF THE RELEASE PRESSURE AND ANOTHER ONE FOR JAMMING OF THE ROD STROKE.**

NEVER LOOSEN THE JAMMING NUT.

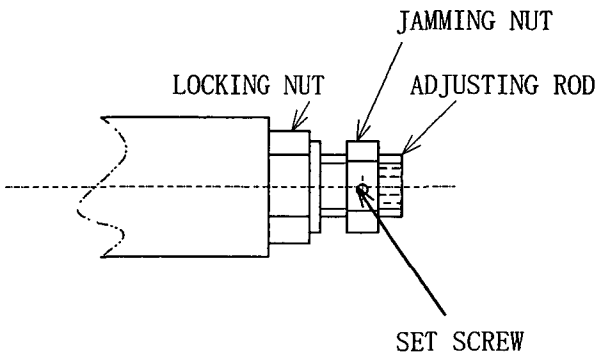

1. Loosen the locking nut and the adjusting rod.
2. Manipulate the solenoid valve for the servo piston to be at the end of cylinder.
3. Set the release pressure by the adjusting rod and lock it by the locking nut.
   (Setting of the relief valve is to be done by means of the pressure gauge.)
4. Bring the blade angle to neutral (AB: 0°), and stop the hydraulic (pitch control oil) pump.

6. Sequence checking

··· For further details refer to the instruction manual for "Remote control system".

1. Set the selector switch on the motor control panel to "REMOTE".
2. Set the operation switch on the bridge remote control stand to "Control Power ON".
3. Manipulate each switch and confirm lighting of the corresponding pilot lamp.
4. Confirm lighting of each pilot lamp also at the motor

control panel.

5. The alarm lamps and buzzers are to detect "drop of gravity tank oil level", "drop of pressure" etc... Hence manipulate the level relay and pressure switch to confirm lighting of the pilot lamp and sounding of the buzzer, respectively.

⚠ **DANGER : DO THE ABOVE WITH THE THRUSTER DRIVE MOTOR OFF.**

7. Starting

For starting of the thruster, follow the procedure given in Part 1. 1.2 "Operation Manual"

Part 8. Spare Parts

When the ordering the spare parts please note the following:

1. Kindly let us have spare parts orders in writing. In urgent case, orders by fax will be sufficient.

2. The order must contain the following data:
   1) the Type, Denomination, Machine number as indicated on the rating plate of the thruster tube.
   2) quantity of the spares to be ordered.
   3) the parts number, parts name and drawing number of the spare parts mentioned in the separate spare parts list.
   4) the required means of dispatch (e.g. by air. by sea freight etc.)

3. Our agencies are entitled to book orders (see last page)

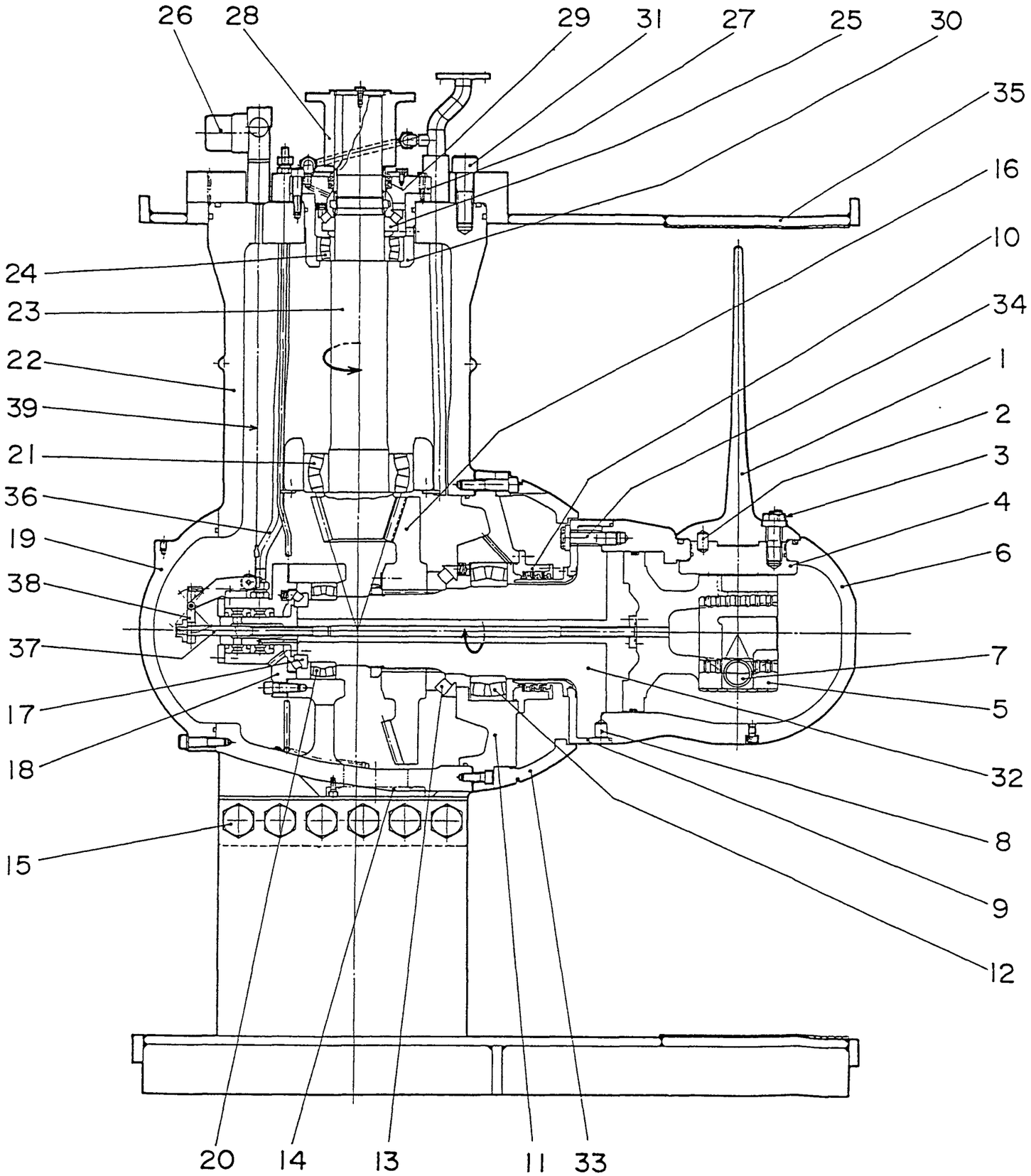

ITEM	品　名	NAME	REQ.D NO
1	プロペラブレード	PROPELLER BLADE	4
2	ピン	PIN	4SET
3	ブレードボルト	BLADE BOLT	4SET
4	クランクディスク	CRANK DISK	4
5	クロスヘッドピストン	CROSSHEAD PISTON	1
6	プロペラハブ	PROPELLER HUB	1
7	スライディングブロック	SLIDING BLOCK	4
8	ピン	PIN	1SET
9	シャフトフード	SHAFT HOOD	1
10	軸封水装置	*SHAFT* SEALING	1SET
11	ベアリングハウジング	BEARING HOUSING	1
12	軸受	BEARING	1
13	軸受	BEARING	1
14	のぞき窓	CHECKING COVER	1
15	フィクシングボルト	FIXING BOLT	1SET
16	ベベルギヤ	BEVEL GEAR	1
17	軸受	BEARING	1
18	給油環	FEED RING	1
19	ギヤケースキャップ	GEARCASE CAP	1
20	軸受	BEARING	1
21	軸受	BEARING	1
22	ギヤケース	GEAR CASE	1
23	インプットシャフト	INPUT SHAFT	1
24	軸受	BEARING	1
25	軸受	BEARING	1
26	翼角追従発信器	PITCH ANGLE TRANSMITTER	1SET
27	スタフィングボックス	STUFFING BOX	1
28	カップリング	COUPLING	1
29	軸封水装置	SHAFT SEALING	1SET
30	ベアリングハウジング	BEARING HOUSING	1
31	フィクシングボルト	FIXING BOLT	1SET
32	プロペラシャフト	PROPELLER SHAFT	1
33	フェアリングカバー	FAIRING COVER	1
34	フィクシングボルト	FIXING BOLT	1SET
35	チューブ	TUBE	1
36	圧油パイプ	OIL TUBE	2
37	圧油導入管	OIL ENTRY TUBE	1
38	復帰レバー	FEED BACK LEVER	1
39	チェーン	CHAIN	1

Fig-1	THRUSTER ASSEMBLY
付図-1	スラスタ組立断面図

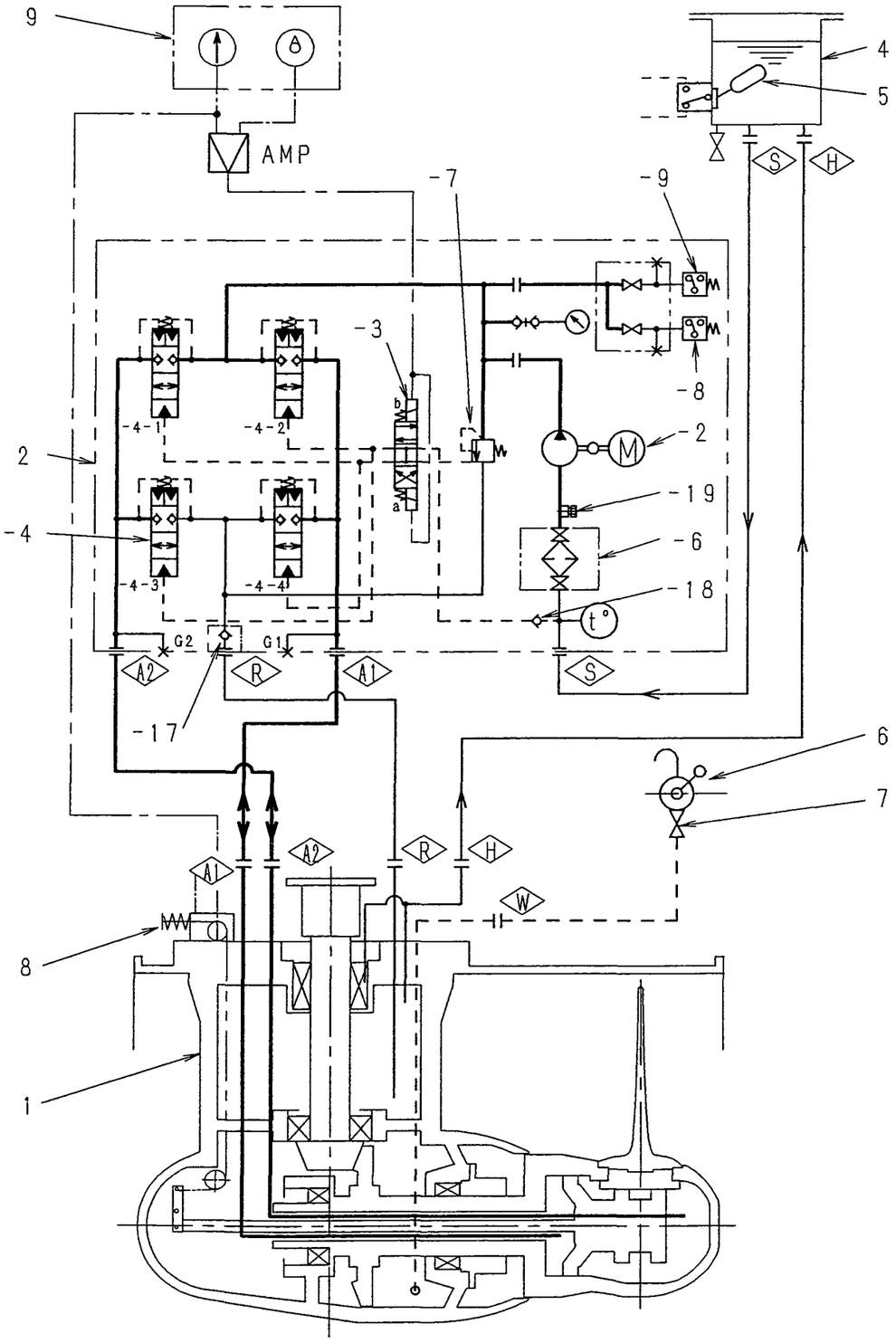

ITEM	NAME OF PART	部品名称	REQ.D No.
1	THRUSTER UNIT	スラスタ本体	1
2	HYDRAULIC UNIT	油圧ユニット	1
-1	OIL SERVICE PUMP	圧油ポンプ	1
-2	ELECTRIC MOTOR	圧油ポンプ用電動機	1
-3	SOLENOID OPERATED VALVE	電磁切換弁	1
-4	CARTRIDGE (LOGIC) VALVE	カートリッジ(ロジック)弁	4
-6	STRAINER	ストレーナ	1
-7	RELIEF VALVE	リリーフ弁	1
-8	PRESSURE SWITCH	圧力スイッチ	1
-9	PRESSURE SWITCH (OPTIONAL)	圧力スイッチ(オプション)	1
-17	CHECK VALVE	チェック弁	1
-18	CHECK VALVE	チェック弁	1
-19	AIR VENT PLUG	空気抜きプラグ	1
4	GRAVITY TANK	重力タンク	1
5	FLOAT SWITCH	油面リレー	1
6	HAND PUMP	潤滑油ハンドポンプ	1
7	GLOBE VALVE	フランジ形玉形弁	1
8	BLADE ANGLE TRANSMITTER	翼角追従発信器	1
9	REMOTE CONTROL SYSTEM	操縦スタンド	1

VALVE OPERATING CONDITIONS						
VALVE NAME (弁名称)	SOLENOID VALVE (電磁弁)	LOGICAL VALVES (ロジック弁)				RELIEF VALVE (リリーフ弁)
POSITION No. (弁符号)	-3	-4-1	-4-2	-4-3	-4-4	-7
VALVE CONDITIONS (弁作動状況)	DE-ENERGIZED (無励磁)	CLOSE (閉)	CLOSE (閉)	CLOSE (閉)	CLOSE (閉)	UN-LOADING アンローディング
	"a" ENERGIZED ("a" 励磁)	CLOSE (閉)	OPEN (開)	OPEN (開)	CLOSE (閉)	LOADING ローディング
	"b" ENERGIZED ("b" 励磁)	OPEN (開)	CLOSE (閉)	CLOSE (閉)	OPEN (開)	LOADING ローディング

Fig.-2	SKELETON DIAGRAM OF PIPING
付図-2	配管系統図

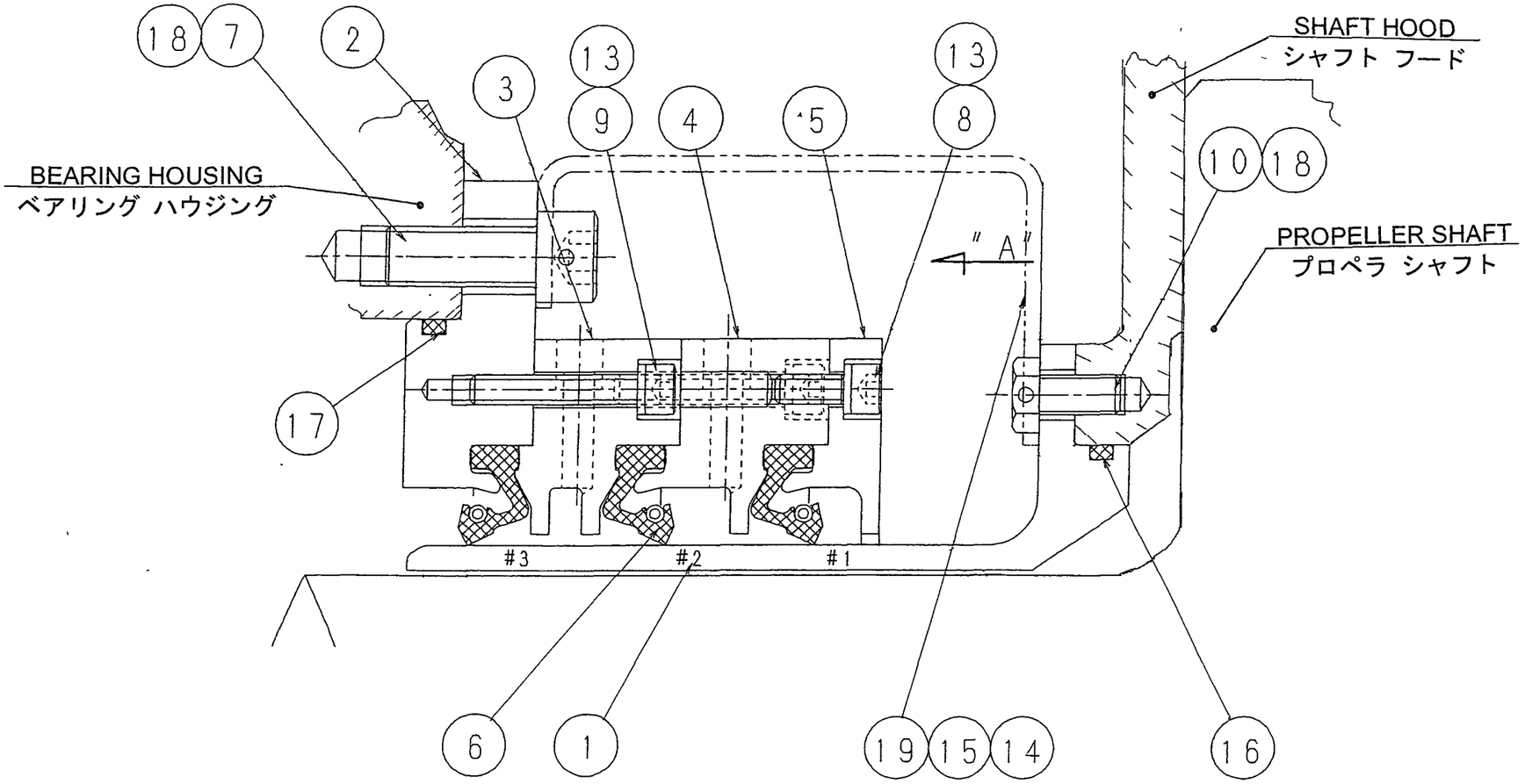

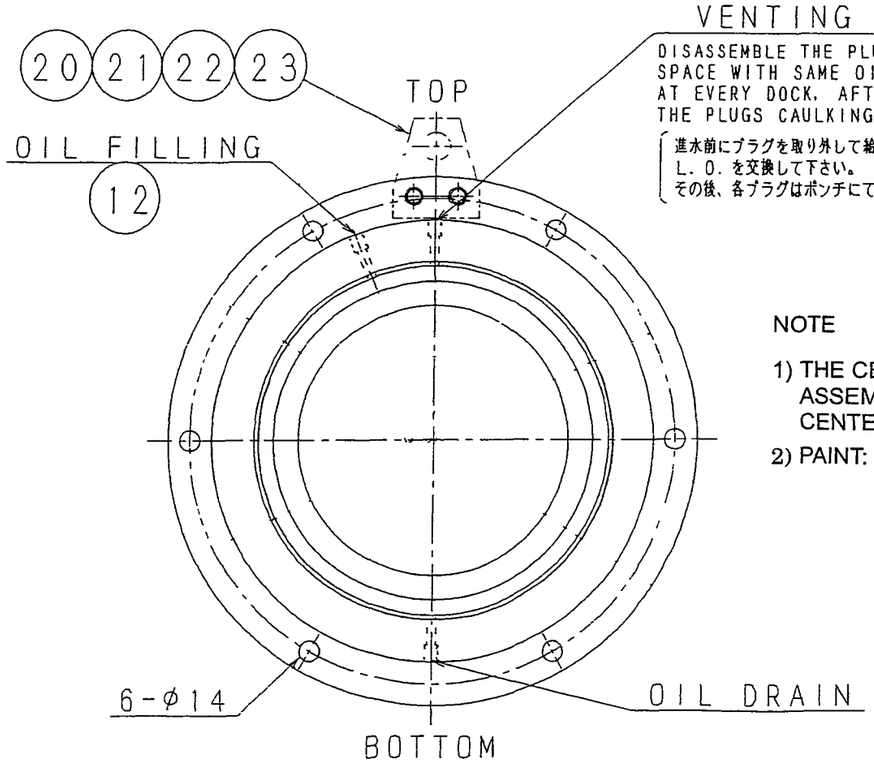

VIEW IN DIRECTION "A"

VENTING

DISASSEMBLE THE PLUG, AND RENEW THE OIL IN THE VOID SPACE WITH SAME OIL THAT IS USED IN THE GEAR CASE AT EVERY DOCK. AFTER THAT PLUG UP FIRMLY, AND LOCK THE PLUGS CAULKING BY PUNCH.

進水前にプラグを取り外して給油し（軸受箱L. O と同一銘柄）入梁するたびにL. O. を交換して下さい。
その後、各プラグはポンチにてかしめて下さい。

NOTE

1) THE CENTER OF SEALING RING TO BE ASSEMBLED CONCENTRICALLY TO THE CENTER OF SPIGOT OF AFT CASING.
2) PAINT: EPOSEAL BTE 2PLY (COLOR: BROWN)

符号 ITEM	部品名 PARTS OF NAME		個数 Q'TY
23	六角頭付ボルト HEXAGON HEAD SCREW		2
22	六角頭付ボルト HEXAGON HEAD SCREW		2
21	吊り金具 TRANSPORT TOOL		1
20	パッキン PACKING		2
19	座金（両舌付） SECURING PLATE		8
18	針金 WIRE		1
17	Oリング RUBBER RING		1
16	Oリング RUBBER RING		1
15	止メ金具 MOUNTING STRAP		4
14	六角頭付ボルト HEXAGON HEAD SCREW		8
13	歯付座金 TOOTHED LOCK WASHER		18
12	プラグ PLUG		6
10	六角頭付ボルト HEXAGON HEAD SCREW		6
9	六角穴付ボルト CYLINDER HEAD SCREW		12
8	六角穴付ボルト CYLINDER HEAD SCREW		6
7	六角穴付ボルト HEXAGON HEAD SCREW		6
6	シーリングリング SEALING RING		3
5	カバーリング COVER RING, TWO PART		1
4	No1 中間リング No1 INTERMEDIATE RING		1
3	No2 中間リング No2 INTERMEDIATE RING		1
2	フランジリング FLANGE RING		1
1	ライナー LINER		1

Note: Quantity is to be subject to change for model.

Fig. -3 SHAFT SEALING DEVICE

付図-3 軸封水装置組立図

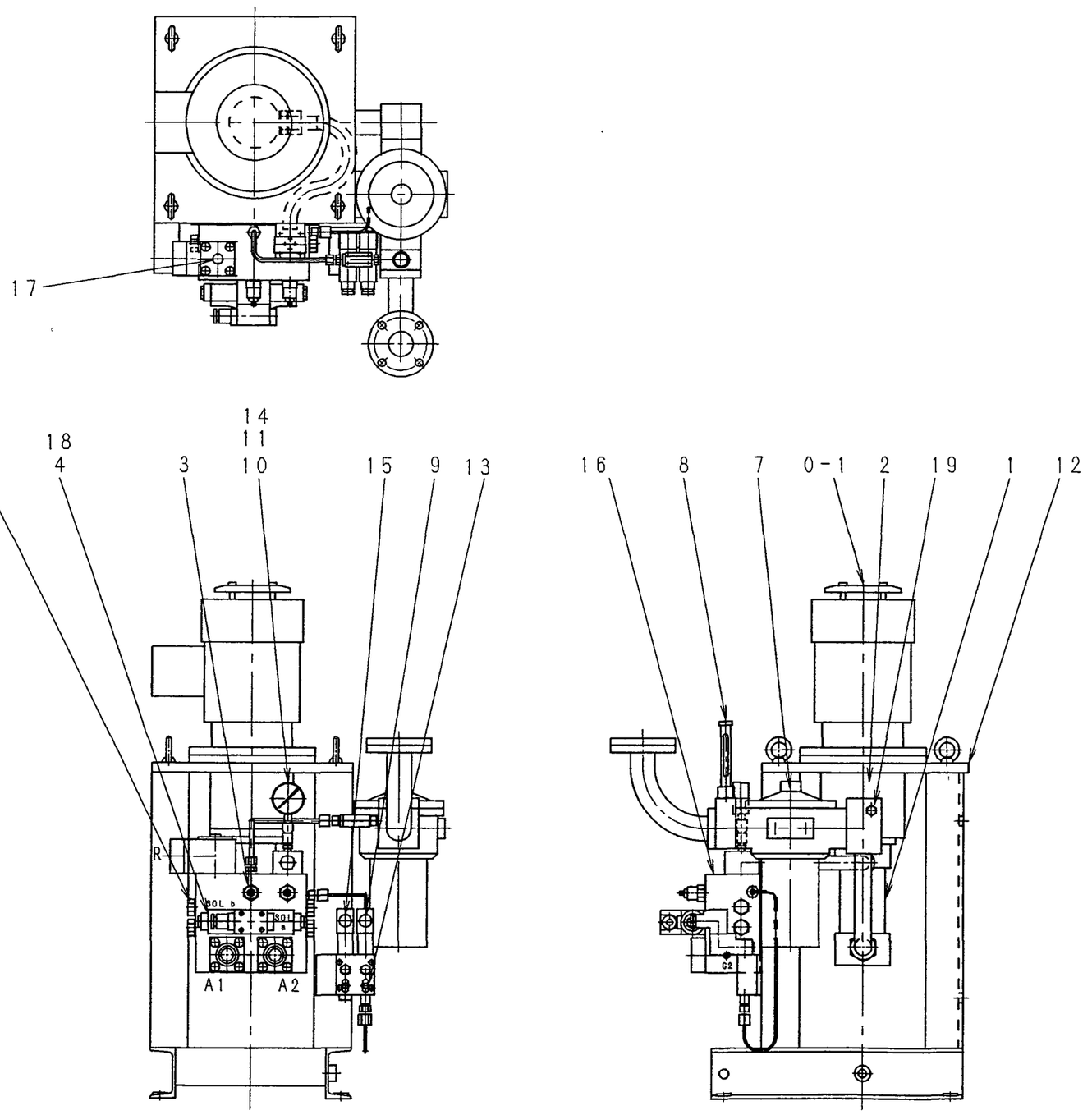

POS. No.	品　　名	NAME	REQ'D No.
1	油圧ポンプ	HYDRAULIC PUMP	1
2	カップリング	COUPLING	1
3	カートリッジ（リリーフ）弁	CARTRIDGE(RELIEF)VALVE	1
4	電磁切換弁	SOLENOID OPERATED VALVE	1
5	カートリッジ（ロジック）弁	CARTRIDGE(LOGIC)VALVE	4
7	サクションフィルター	SUCTION FILTER	1
8	温度計	THERMOMETER	1
9	圧力スイッチ	PRESSURE SWITCH	1
10	圧力計	PRESSURE GAUGE	1
11	圧力計コネクタ	GAUGE CONNECTOR	1
12	共通台板	COMMON BED	1
13	テストバルブ	TEST VALVE	1
14	圧力計カップリング	GAUGE COUPLING	1
15	圧力スイッチ（オプション）	PRESSURE SWITCH (OPTIONAL)	1
16	マニホールド	MANIFOLD	1
17	チェック弁	CHECK VALVE	1
18	チェック弁	CHECK VALVE	1
19	空気抜きプラグ	AIR VENT PLUG	1
0-1	電動機（立型）	ELECTRIC MOTOR	1

Fig.-4	HYDRAULIC UNIT ASSEMBLY
付図-4	油圧ユニット組立図

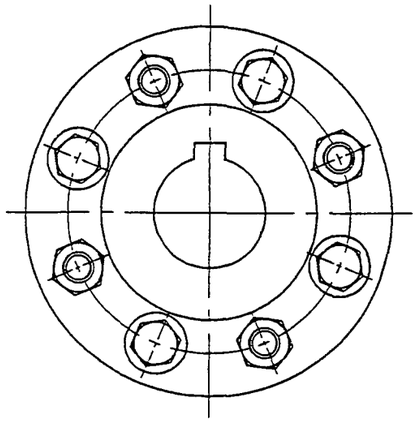

VIEW A-A

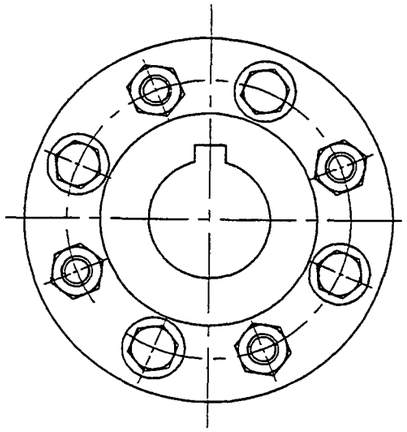

VIEW B-B

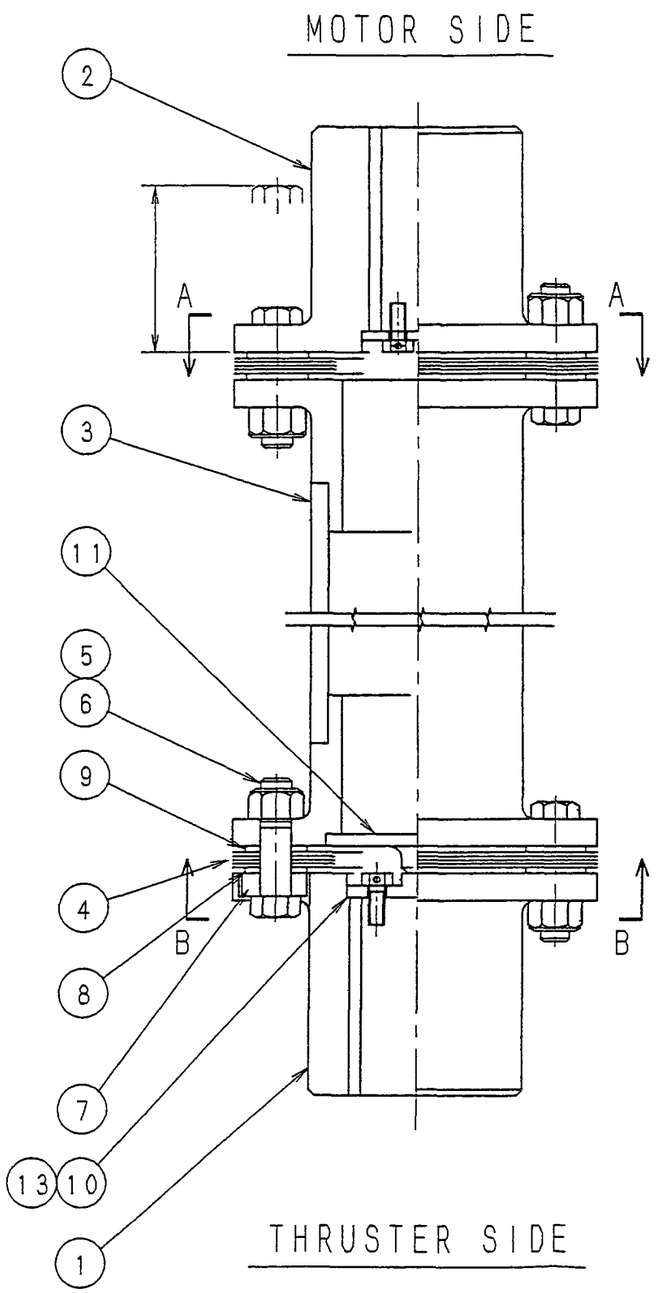

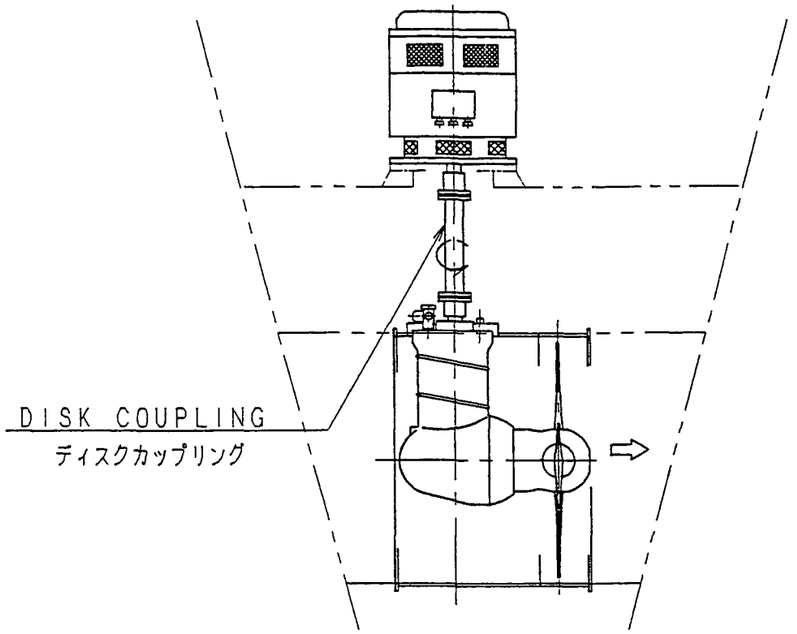

13	六角ボルト	HEXAGON HEAD BOLT	2
11	スラストプレート	THRUST PLATE	1
10	スラストプレート	THRUST PLATE	1
9	ブッシュ	BUSHING	16
8	ザ ガ ネ	WASHER	16
7	オーバーロードワッシャ	WASHER. OVERLOAD	16
6	Dナット	D NUT	16
5	リーマボルト	REAMER BOLT	16
4	ディスクエレメント	DISK ELEMENT	2SETS
3	スペーサ	SPACER	1
2	モータ側カップリング	COUPLING	1
1	スラスタ側カップリング	COUPLING	1
ITEM	部 品 名 称	NAME OF PART	Q'TY

FIG-5	DISK COUPLING
付図-5	ディスクカップリング

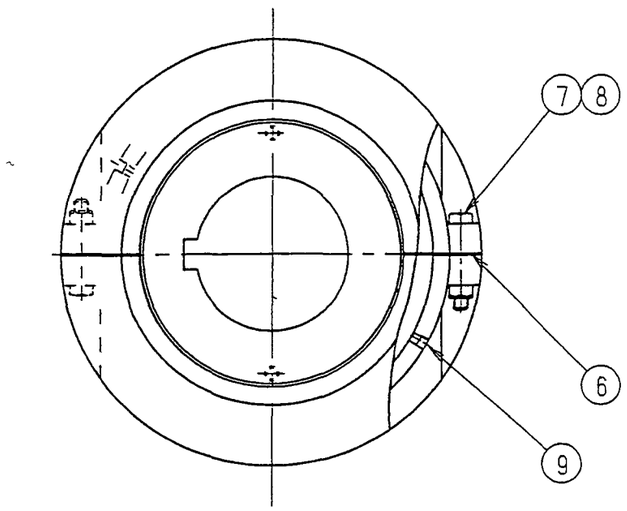

MOTOR SIDE

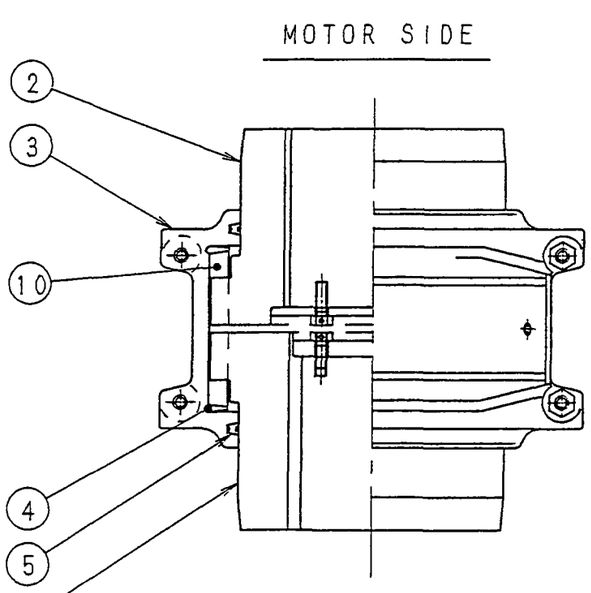

THRUSTER SIDE

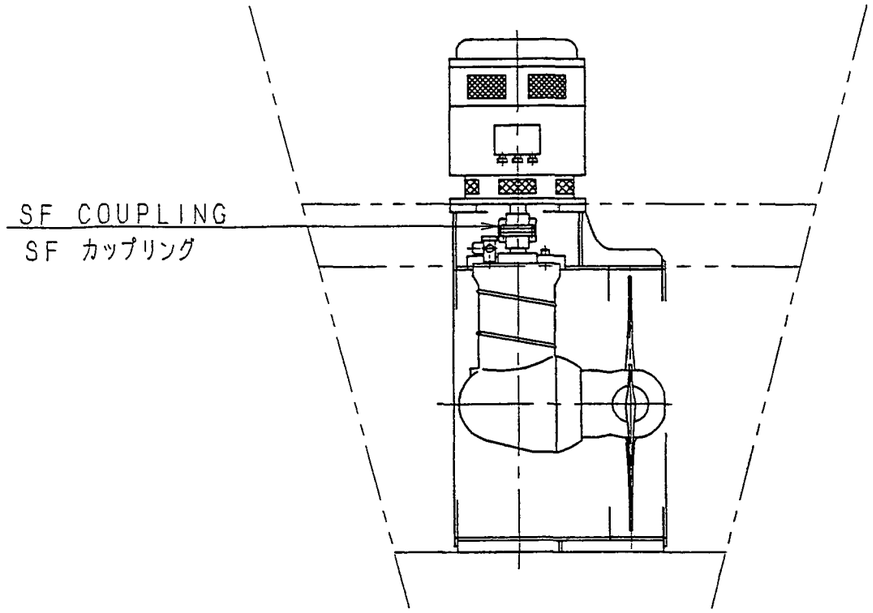

ITEM	部 品 名 称	NAME OF PART	Q'TY
10	ラングスペーサ	RUNG SPACER	8
9	六角穴付プラグ	HEX. SOCK. PLUG	2
8	ナイロンナット	NYLON NUT	4
7	六角穴付ボルト	HEX. SOCK. BOLT	4
6	ガスケット	GASKET	2
5	SFシールリング	SF SEAL RING	2
4	Tグリッドメンバ	T-GRIDMEMBER	2
3	Tハーフカバー	T-COVER	2
2	Tハブ	T-HUB	1
1	Tハブ	T-HUB	1

FIG-6	SF COUPLING
付図-6	SF カップリング

GLOBAL NETWORK

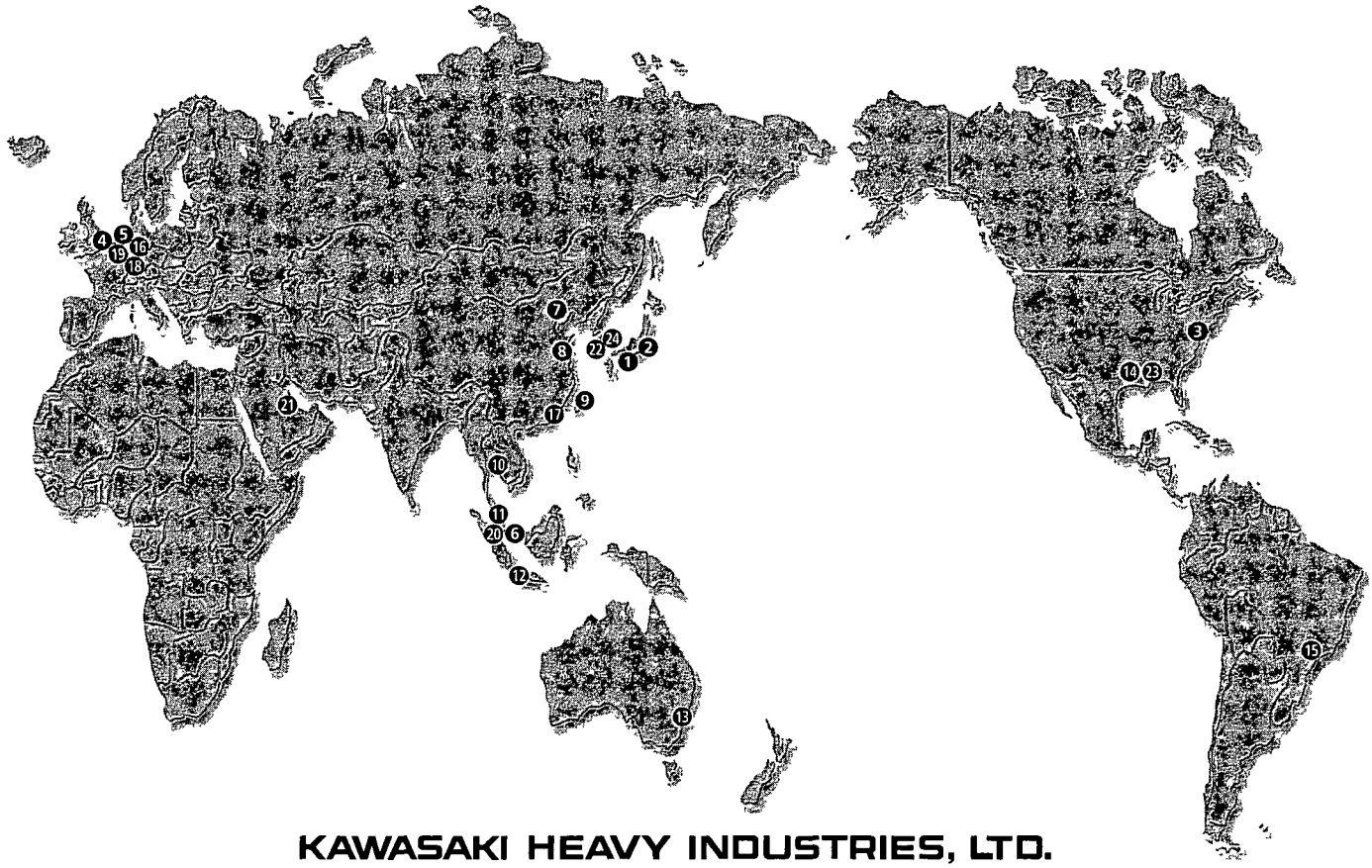

KAWASAKI HEAVY INDUSTRIES, LTD.

MAIN OFFICES

❶ Kobe Works
1-1, Higashikawasaki-cho 3-chome, Chuo-ku, Kobe 650-8670, Japan
Marine Machinery Sales Dept., Parts Sales Sect.,
Phone : +81-78-682-5321 Fax : +81-78-682-5549
Marine Machinery Dept., (Design Dept.)
Phone : +81-78-682-5355 Fax : +81-78-682-5528
Construction & Commissioning Dept.,
Phone . +81-78-682-5474 Fax : +81-78-652-0567

❷ Tokyo Head Office
Marine Machinery Sales Dept., World Trade Center Bldg.,
4-1, Hamamatsu-cho 2-chome, Minato-ku, Tokyo 105-6116, Japan
Phone · +81-3-3435-2374 Fax . +81-3-3435-2022

❸ Kawasaki Heavy Industries (U.S.A.), Inc.
599 Lexington Avenue, Suite 3901, New York, N.Y. 10022, U S A.
Phone : +1-212-759-4950 Fax : +1-212-759-6421

❹ Kawasaki Heavy Industries (UK) Ltd.
4th Floor, 3 St. Helen's Place, London EC3A 6AB, England
Phone : +44-20-7588-5222 Fax : +44-20-7588-5333

❺ Kawasaki Heavy Industries (Europe) B.V.
7th Floor, Rivierstaete, Amsteldijk 166, 1079, LH Amsterdam, The Netherlands
Phone : +31-20-6446869 Fax : +31-20-6425725

❻ Kawasaki Heavy Industries (Singapore) Pte. Ltd.
6 Battery Road, #18-04, Singapore 049909
Phone : +65-62255133~4 Fax . +65-62249029

REPRESENTATIVES

❼ Beijing Office
Phone: +86-10-6505-1350
Fax : +86-10-6505-1351

❽ Shanghai Office
Phone: +86-21-6841-3377
Fax : +86-21-6841-2266

❾ Taipei Office
Phone: +886-2-2322-1752
Fax : +886-2-2322-5009

❿ Bangkok Office
Phone: +66-2-632-9511
Fax : +66-2-632-9515

⓫ Kuala Lumpur Office
Phone: +60-3-2070-5141
Fax : +60-3-2070-5148

⓬ Jakarta Office
Phone: +62-21-314-0737
Fax : +62-21-314-1049

⓭ Sydney Office
Phone: +61-2-9684-2585
Fax : +61-2-9684-4580

⓮ Kawasaki Heavy Industries (U.S.A.), Inc. Houston Branch
Phone: +1-713-654-8981
Fax : +1-713-654-8187

⓯ Kawasaki Do Brasil Industria E Comércio Ltda.
Phone: +55-11-3289-2388
Fax : +55-11-3289-2788

⓰ Kawasaki Heavy Industries G.m.b.H.
Phone. +49-211-1792340
Fax : +49-211-161844

⓱ Kawasaki Heavy Industries (H.K.) Ltd.
Phone· +852-2522-3560
Fax · +852-2845-2905

EMERGENCY CONTACT POINTS

❺ Kawasaki Heavy Industries (Europe) B.V.
Phone: +31-20-6446869
Fax : +31-20-6425725

⓲ VA TECH Escher Wyss GmbH
Phone: +49-751-83-3426
Fax : +49-751-83-3274

⓳ Nabmic B.V. (Remote Control System)
Phone: +31-10-206-0325
Fax : +31-10-206-0326

⓴ TAKNAS ENGINEERING (PTE) LTD
Phone: +65-67775856
Fax : +65-67796711

㉑ TAKNAS TOYO ENGINEERING (MIDDLE EAST) L.L.C.
Phone: +971-4-3478344
Fax : +971-4-3478342

㉒ KT Electric Co., Ltd.
Phone: +82-51-265-0255
Fax : +82-51-265-0250

㉓ FAR EAST MARINE SERVICE
Phone: +1-713-676-2340
Fax : +1-713-676-2461

㉔ HASUNG TRADING CORP.
Phone: +82-51-244-3933
Fax : +82-51-244-3944

www.khi.co.jp

SEISA

注文主 CUSTOMER

KAWASAKI HEAVY INDUSTRIES, LTD.

SF COUPLING for SIDE THRUSTER

INSTRUCTION BOOK

NOTES TO THE CUSTOMER

Before handling the machine, this instruction manual should be read through carefully to familiarize yourselves with contents of the manual.

The machine should be handled by skilled operator (those who have grasped the construction and function of the article).

Consideration should be given so that this instruction manual will reach to the user of this machine.

This manual should be kept in file so as to be serviceable at any time.

R 0	1999. 8. 4			M.Y.	——	——	
制改訂 REV. No	作成年月日 DATE	担当 DESIGNED	調査 CHECKED	承認 APPROVED	承認 APPROVED	レビュー REVIEWED	備考 NOTE
製造本部 技術部 ENGINEERING DEPARTMENT						品質保証部 Q.A. DEPT.	

配布先； □客先: 部 □見積室: 部 □計画室: 部 □営業所: 部 □製造室: 部 □品証部: 部	製造番号 WORK No.
大阪製鎖造機株式会社 OSAKA CHAIN & MACHINERY, LTD.	図書番号 DOC. No. AF-0000-1Z01

DSS607090様2(オーダ)

Total incl. Cover 総紙数: 9

3-2

SAFETY PRECAUTIONS

Before handling this machine, be sure to read this manual and other appendices carefully to familiarize yourselves with contents of the manual for proper operation. Start on using this machine after having been well acquainted with all the equipment knowledge, safety information, and cautionary instructions. The rank of safety precautions is classified into "WARNING" and "CAUTION" in this instruction manual.

⚠ WARNING	Where occurrence of dangerous situation such as death or serious injury is presumable in the case of mishandling.
⚠ CAUTION	Where occurrence of dangerous situation such as light injury or only physical damage is presumable in the case of mishandling.

Even such matters which fall under ⚠ CAUTION may possibly lead to serious results depending upon the circumstances. Be sure to observe the instructions given by ⚠ CAUTION where every description covers important notes.

1. Specifications of the coupling

⚠ WARNING

- Never remodel the machine. Any remodeling practices may lead to a danger of failure and injury.
- Do not use the machine in the explosive atmosphere. Such uses may lead to a danger of explosion, fire, and accident of human body.

⚠ CAUTION

- Do not use the machine outside the scope of specifications. Such uses may lead to a danger of failure and injury.
- Do not remove the nameplate of the machine.

2. Outline of the Coupling

⚠ WARNING

- Such practices as hauling, unpacking, installation, piping, wiring, running, operation, maintenance and inspection should be carried out by persons possessed of expertism and workmanship.
  There are such possibilities as electrification, fire, failure, and injury.

⚠ CAUTION

- Do not insert your finger or any substances into the openings of the machine.
  There are such possibilities as electrification, fire, failure, and injury.

3. Hauling and Unpacking

⚠ WARNING

- When the machine is lifted for hauling, never gain access to the underside of the machine.
  There is a possible danger of the accident of human body caused by falling-off.

⚠ CAUTION

- Before lifting the machine, check the machine weight and lifting procedure, and use such hauling tools as are possessed of rated capacity of lifting not less than the machine weight.
  There is a possible danger of failure and injury caused by falling-off and turnover.
- Unpack the machine after making sure of its top and bottom.
  There is a possible danger of failure and injury caused by turnover.

4. Centering

⚠ CAUTION

- Do not touch the key groove of shaft end and the acute part of corner of the machine direct by unarmed hand. There is a possible danger of suffering injuries.
- When coupling with the companion machine, keep the centering accuracy within the control value as shown in the instruction manual, drawing, etc.
  There is a possible danger of failure cauced when the machine is used beyond the control value.
- Before coupling with the companion machine, check for the direction of rotation.
  There is a possible danger of failure and injury caused depending upon the difference in the rotating direction.
- Protect the exposed rotating part with safety cover or the like.
  There is a possible danger of injury caused by entanglement.

5. Disassembly and Reassembly

⚠ CAUTION

- Disassembly and reassembly should be carried out by persons possessed of expertism and workmanship.
  (those who are conversant in construction and function, and are capable of proper work)
  Incomplete work may lead to a danger of failure.

6. Lubrication

⚠ CAUTION

- The machine is not filled up with lubricating oil.

  Before starting on operation, fill the machine with the lubricating oil of the type as recommended by instruction manual, drawing, etc. up to the specified level.

  The machine will result in failure if it is put in running without lubricating oil or in the state of short of oil.

7. Starting Operation

⚠ WARNING

- During operation, never gain access to or come in contact with rotators (shaft etc.).

  There is a possibility of the accident of human body caused by entanglement.

⚠ CAUTION

- The machine is not filled up with lubricating oil.
  Before starting on operation, fill the machine with the lubricating oil of the type as recommended by instruction manual, drawing, etc. up to the specified level.
  The machine will result in failure if it is put in running without lubricating oil or in the state of short of oil.
- In case of abnormality, stop the machine forthwith to investigate into the cause of abnormality and never operate the machine until remedial actions have been taken.
  There is a possibility of failure and injury.

8. Maintenance and Inspection

⚠ WARNING

- Do not operate the machine while the safety cover etc. that were removed for inspection are being left unmounted.
  There is a possible danger of the accident of human body caused by entanglement.

Instructions for Installation and Maintenance

STEELFLEX COUPLINGS 3204-01

Horizontal and Vertical

SERVICE MANUAL

Type T10

Subject to change without notice

TYPE T10 STEELFLEX COUPLING PARTS

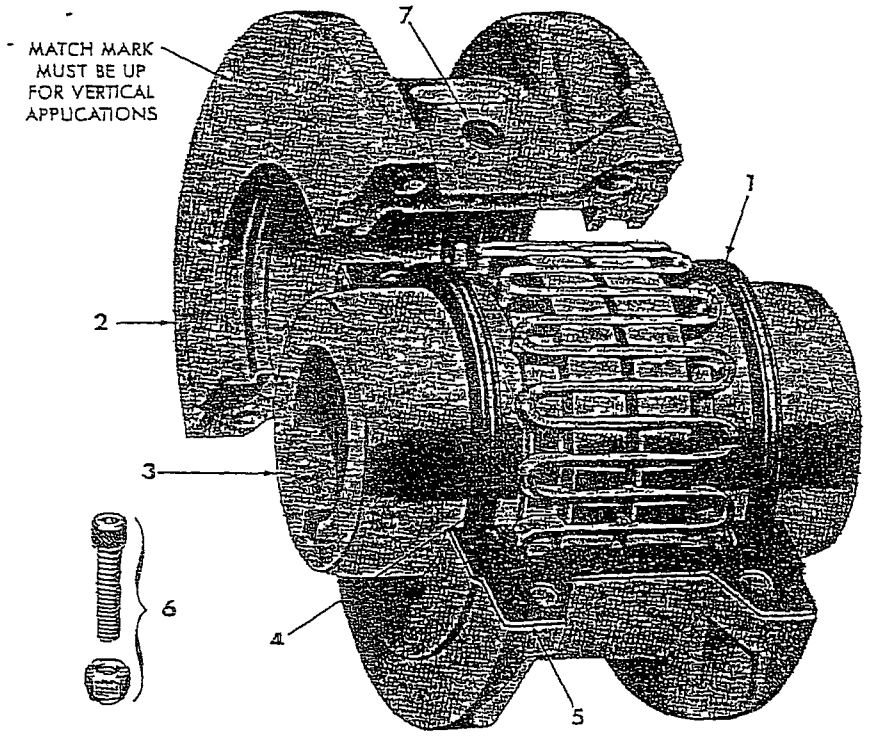

PART NUMBERS

1. Seal
2. Cover
3. Hub (Specify bore and keyway)
4. Grid
5. Gasket
6. Fasteners
7. Lube Plug

"Manufactured Under License from FALK, Milwaukee"

WHEN ORDERING SPARE PARTS, SPECIFY COUPLING **SIZE** AND **TYPE** AS SHOWN ON COUPLING COVER

INTRODUCTION— This manual applies to Sizes 20 thru 140 T10 Falk Steelflex Tapered Grid Couplings. They are designed to operate in either the horizontal or vertical position without modification. However, for vertical applications, the match mark shown above, must be up. The performance and life of the couplings depend largely upon how you install and service them. Carefully follow the instructions in this manual for optimum performance and trouble free service.

PARTS IDENTIFICATION — All coupling parts have identifying part numbers as shown above. Parts 3 and 4 (Hubs and Grids), are the same for both T10 and T20 couplings, all other coupling parts are NOT INTERCHANGEABLE. Therefore, when ordering parts, always SPECIFY SIZE and TYPE shown on the COVER.

LUBE FITTINGS — Cover halves have ⅛ NPT lube holes. Use a standard grease gun and lube fitting as instructed in Step 6 on Page 2.

LIMITED END FLOAT — When electric motors are fitted with sleeve bearings, limited axial end float couplings should normally be employed to protect motor bearings. Falk Steelflex couplings are easily modified to limit end float, refer to Manual 428-820 for instructions.

LUBRICATION — Adequate lubrication is essential for proper operation of the coupling. Refer to Table 1 on Page 2 for the amount of lubricant required. It is recommended that the coupling be checked once a year and lubricant added if required. For extreme or unusual operating conditions check more frequently.

CAUTION—Consult applicable local and national safety codes for proper guarding of rotating shafts and couplings.

LUBRICANT SPECIFICATIONS — Refer to Manual 428-010 for recommended lubricants. The following specifications apply to lubricants for Falk couplings which are lubricated annually and operate within ambient temperatures of 0° to 150°F (−18° to +66°C). For temperatures beyond this range, consult the Factory.

Dropping Point — 300°F (149°C) or higher

Consistency — NLGI No. 2 with worked penetration value in the range of 250 to 300.

Separation and Resistance — Low oil separation rate and high resistance to separation from centrifuging.

Liquid Constituent — To possess good lubrication properties equivalent to a high quality, well refined petroleum oil.

Inactive — Must not corrode steel or cause swelling or deterioration of synthetic seals.

Clean — Free from foreign inclusions.

Semi-permanent Lubrication — Up to eight years between lubrication checks may be obtained thru the use of "still-bottom asphaltic based lubricants. Refer to Service Manual 428-012 for details.

INSTALLATION — Only standard mechanics tools, wrenches, a straight edge and feeler gauges are required to install Falk Steelflex couplings. Coupling Sizes 20 thru 90 are generally furnished for CLEARANCE FIT with set screws. Sizes 100 and larger are furnished for an INTERFERENCE FIT without set screws. Heat hubs with interference fit in an oil bath to a maximum of 275°F (135°C) to mount. The oil flashpoint must be 350°F (177°C) or higher. Refer to Page 2 for detailed mounting instructions.

INSTALLATION OF TYPE T10 STEELFLEX TAPERED GRID COUPLINGS

NO. 8/8

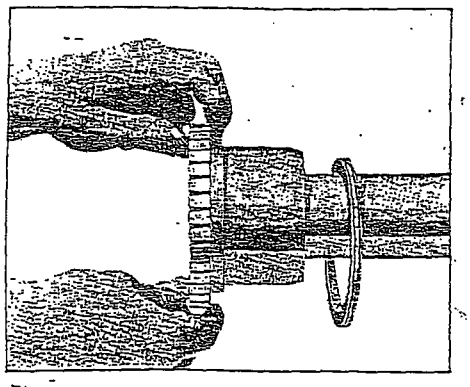

1 MOUNT SEALS AND HUBS

Lock out starting switch of prime mover. Clean all metal parts using a non-flammable solvent. Lightly coat seals with grease and place on shafts BEFORE mounting hubs. Mount hubs on their respective shafts so the hub face is flush with the end of its shaft. Tighten set screws when furnished.

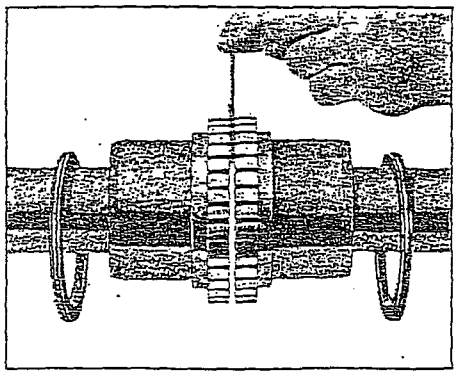

2 GAP & ANGULAR ALIGNMENT

Use a spacer bar equal in thickness to the normal gap specified in Table 1. Insert bar, as shown above, to same depth at 90° intervals and measure clearance between bar and hub face with feelers. The difference in minimum and maximum measurements must not exceed the ANGULAR limit specified in Table 1.

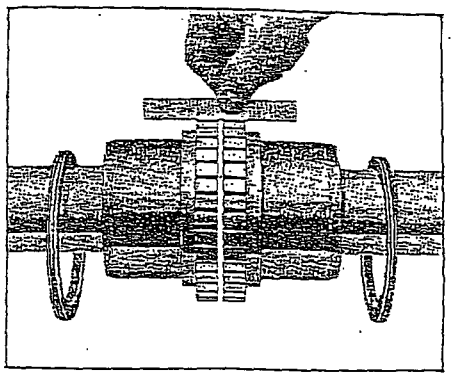

3 OFFSET ALIGNMENT

Align so that a straight edge rests squarely (or within the limits specified in Table 1) on both hubs as shown above and also at 90° intervals. Check with feelers. The clearance must not exceed the OFFSET limit specified in Table 1. Tighten all foundation bolts and repeat Steps 2 and 3. Realign coupling if necessary. NOTE: Use a dial indicator for more accurate alignment.

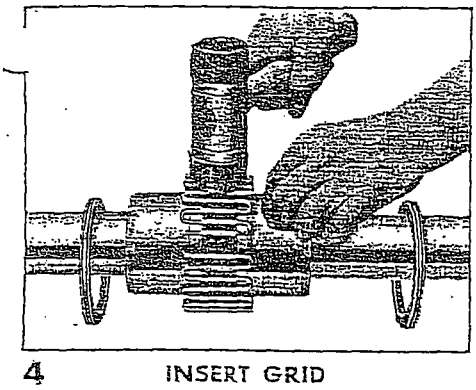

4 INSERT GRID

Pack gap and grooves with specified lubricant before inserting grid. When grids are furnished in two or more segments, install them so that all cut ends extend in the same direction; this will permit cover installation. Spread the grid slightly to pass it over the coupling teeth and seat with a soft mallet.

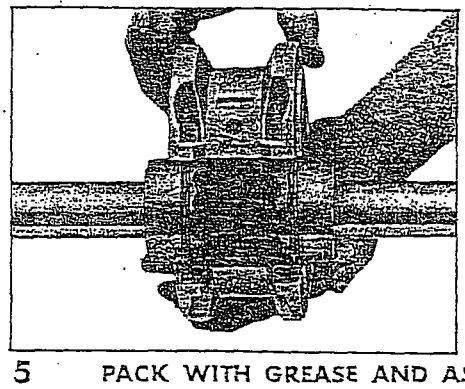

5 PACK WITH GREASE AND ASSEMBLE COVERS

Pack the spaces between and around the grid with as much lubricant as possible and wipe off excess flush with top of grid. Position seals on hubs to line up with grooves in cover. Position gaskets on flange of lower cover half and assemble covers so that the match marks are on the same side (see above). If shafts are not level (horizontal) or coupling is to be used vertically, assemble cover halves with the lug and match mark UP, or on the high side. Secure cover halves with fasteners and tighten to torque specified in Table 1. (Note that Sizes 20 thru 70 have a self-locking feature for the stop nuts.) CAUTION: Make certain lube plugs are installed before operating.

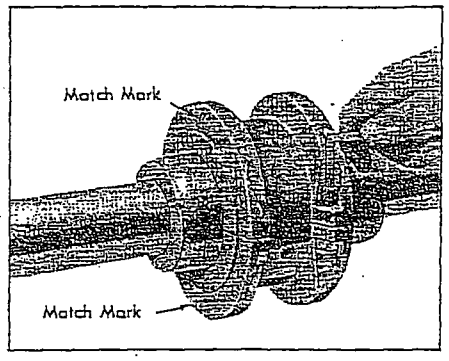

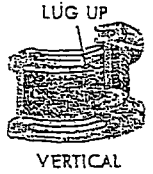

VERTICAL COUPLINGS

TABLE 1 INSTALLATION DATA * (Dimension — mm)

SIZE	Gap			Operating ≅ Alignment Limits		Cover Bolt Torque (kg-cm)	Max Speed (rpm)	Lube Wt (gr)
	Min	Normal	Max	Offset (Max)	Angular (Max)			
1090T	1.5	3.2	6.4	0.20	0.18	230	4000	255
1100T	1.5	4.8	9.5	0.25	0.20	300	3250	425
1110T	1.5	4.8	9.5	0.25	0.23	300	3000	500
1120T	1.5	6.4	12.7	0.28	0.25	750	2700	725
1130T	1.5	6.4	12.7	0.28	0.30	750	2400	910
1140T	1.5	6.4	12.7	0.28	0.33	750	2200	1135
1150T	1.5	6.4	12.7	0.30	0.41	750	2000	1900
1160T	1.5	6.4	12.7	0.30	0.46	1500	1750	2810

6 PERIODIC LUBRICATION

— Remove both lube plugs and insert lube fitting. Fill with recommended lubricant until an excess appears at the opposite hole. CAUTION: Make certain all plugs have been inserted after lubricating.

COUPLING DISASSEMBLY AND GRID REMOVAL

Whenever it is necessary to disconnect the coupling, remove the cover halves and grid. A round rod or screw driver that will conveniently fit into the open loop ends of the grid is required. Begin at the open end of the grid section and insert the rod or screw driver into the loop ends. Use the teeth adjacent to each loop as a fulcrum and pry the grid out radially in even, gradual stages, proceeding alternately from side to side.

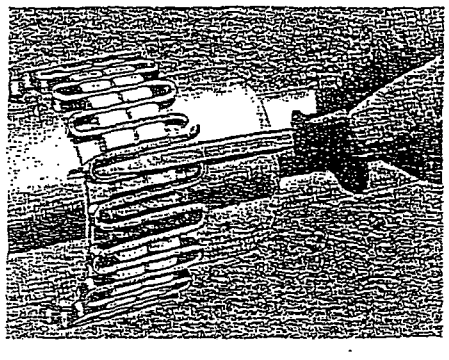

≅ Refer to Bulletin 421-110 for maximum bores and Engineering 427-108 for reboring instructions.

* Align couplings within "Operating Alignment Limits" specified above. Exceeding these limits reduces coupling life and the maximum speed stated.

27

SF COUPLINGS RUNG SPACER INSTALLATION INSTRUCTION

Installing Method and Position of Rung Spacer

Install grid members properly in position, push down rung spacers from the upper side.

For the position of installation, insert rung spacers, 2pcs., at an interval of approx. 90 degrees to the grid member cutout [upper side (motor side)] as shown in Fig-5.

Number of pieces to be installed = 2pcs. × 4places = 8pcs.

Selection of Rung Spacer Length

When adjusting the length of rung spacer on your side, select the length of rung spacer in accordance with the following procedure.

1. Carry out centering of coupling completely and install this grid member.
2. Next, measure X, Y dimensions, (dimensions from the rear-end face to the inside of grid member "R".)

   Adjusted length of rung spacer (Dimension E) = $\frac{X+Y}{2}$

   Cut rung spacers to the above dimensions.

Cutting & Adjusting Method of Rung Spacers

For the cutting & adjusting method of rung spacers, refer to Fig-7.

Cut off a long piece to given length by sawing and adjust in by filling or grinding.

Caution in Assembling Rung Spacers Pre-adjusted in Length

When assembling the rung spacers pre-adjusted on our side, make adjustment through the setting clearance of coupling so that the grid member will not move in axial direction.

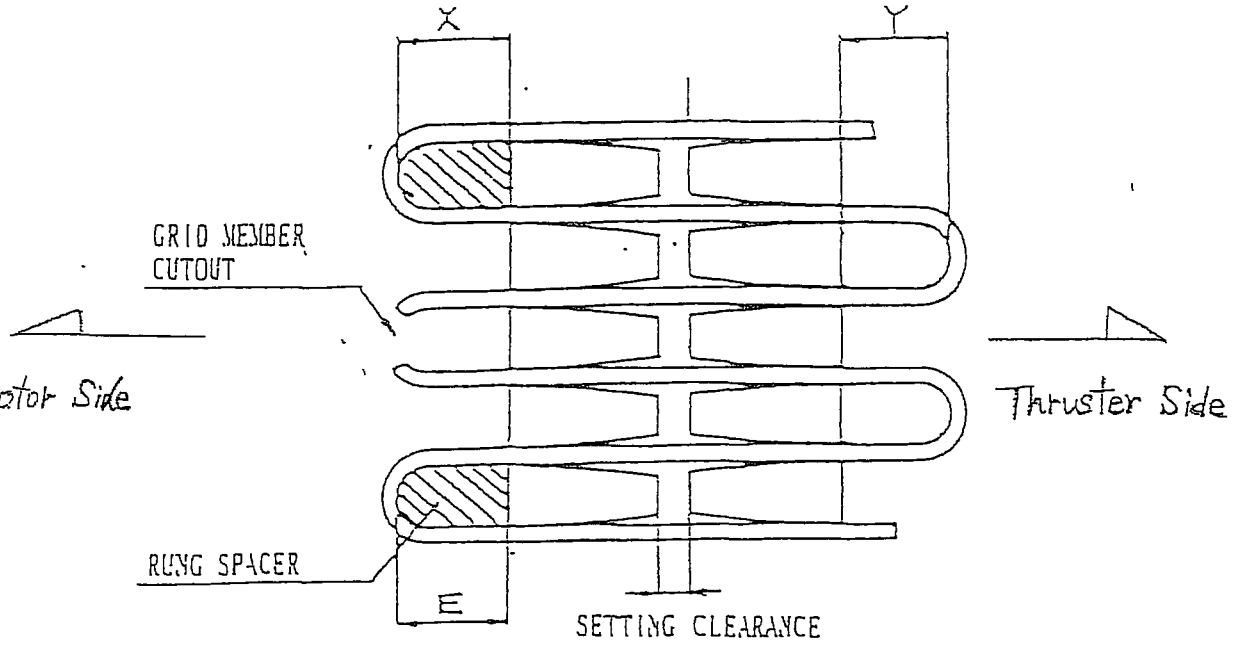

Fig-5

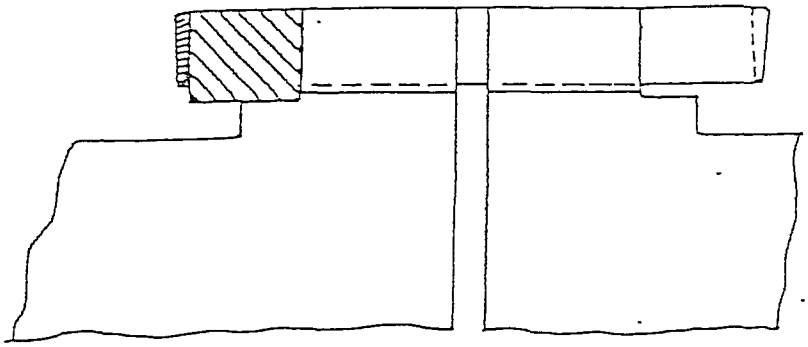

Fig-6

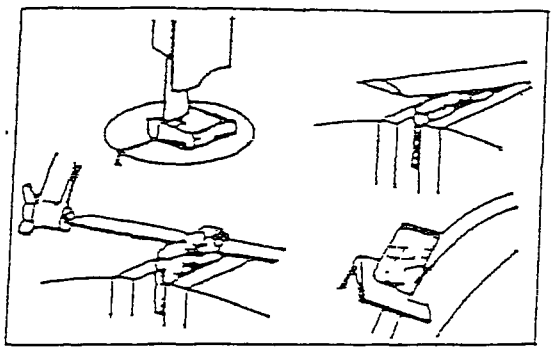

Fig-7 Cutting Method of Rung Spacer

REMOTE CONTROL SYSTEM
OF

KAWASAKI SIDE THRUSTER
KT-157B3
FOR

4,150TEU Class Container Carrier

HYUNDAI HEAVY INDUSTRIES CO.,LTD.
S.No.H1630/1,1671/2,1699-1701,1733

DELIVERY		ORDER NO. 31KB068 ,70,72,74,76,78,80,82	KAWASAKI HEAVY INDUSTRIES, LTD.
YARD		NOTES For working Apr. 25, 2003	GAS TURBINE & MACHINERY COMPANY MACHINERY DIVISION MARINE MACHINERY DEP'T. PROPULSION MACHINERY ENG'NG SECT.
KPME 工務			
KPME 工事			
工務		REVISION	
組立			APPROVED T. Harada
検査			CHECKED M Okada
控	1		DRAWN M. Ishihara
ISSUE		DATE November 24, 2004	DRAWING NO. G4-201-288

(SHEETS COVER INC)

FINISHED PLAN

SHIPYARD	:	HYUNDAI HEAVY INDUSTRIES CO., LTD.
		S.NO. H-1630
MESSRS.	:	KAWASAKI HEAVY INDUSTRIES, LTD.
CLASS	:	LR

MTH Ⅲ TYPE THRUSTER REMOTE CONTROL SYSTEM

Nabtesco Corporation

Instructions for Handling:
"How to Safely Use Your Remote Control System"

The controlled machine : Controllable Pitch Propeller

: Steerable Thruster

: Side Thruster

Important

Before operating this system, you should first thoroughly read this manual, especially the safety instructions.
Keep this manual for future reference.

Nabtesco Corporation
MARINE CONTROL SYSTEMS COMPANY
ENGINEERING DEPT.

1617-1, Fukuyoshidai 1-Chome, Nishi-Ku, Kobe 651-24, JAPAN
Telephone: +81 78 967 3061 Telefax: +81 78 967 4581

⚠b	REVISED	7/9 ~ 9/9	97.10.1	A.K.
⚠b	REVISED	3/9	'01.9.29	A.K.

ED

INTRODUCTION

For operating this remote control system safely, you should know: some pieces of fundamental knowledge such as electric engineering, and wiring; a knowledge of steering; and of the controlled machine (at the level clarified by the company).

Although the system applies various safety measures, any incorrect handling can cause unexpected trouble.
Accordingly, after reading this manual and understanding the contents fully, start operating the system and applying maintenance.

To maintain in good condition and continue in safe operation, we recommend keeping the instructions in this manual.

WARNING: indicates that mishandling may result in personal injury or death.

CAUTION: indicates that mishandling may result in minor personal injury or product/property damage.

Note:
Before operating, overhauling, or adjusting your remote control system or automation device, you should read the finished plan together with this manual.

1. Cautions for Operation

WARNING (1) Never touch moving portions of the controlled machine under remote control because of the danger.

WARNING (2) If the remote control operations become unavailable by accident, immediately change the control position to the engine side. Then, after checking the safety of the vessel prior to anchoring or stopping, locate and repair the trouble.
Regular training against emergencies is recommended.

CAUTION (3) Never open any door/cover of control/alarm devices during operation because of the danger.
Keep all doors/covers closed except during maintenance/ inspection to avoid entry of dust or foreign matter.

(4) Check that all operations using the maneuvering handle are possible to operate safely before entering and leaving ports.

(5) To correctly transmit operational intentions to the control system, press the button switches securely.
Similarly, manipulate the maneuvering/control handles/levers and the selector switches to the notch position (or the designated position).

2. Cautions for Maintenance and Inspection

(1) When maintaining or inspecting an electrical device/system, follow the instructions in "Handling Instructions for Electric Device/System" on page 5/9.

WARNING (2) Before maintaining or inspecting the inside of a piece of equipment, the main power switch on the switchboard must be turned off to avoid electric shocks.

WARNING (3) Because there can be several power supplies for the system, check and turn off all the power supply switches.

(4) Before applying a megger or a withstand voltage test to the system, take off all the wires to the units that prohibit a megger test in order to protect electronic devices.

⚠ CAUTION

(5) During a regular inspection or mooring, a shore electric power source can be used instead of the internal power sources supplied by generators. Misoperation in the remote control system can occur due to a voltage drop while transferring the power sources. When carrying out transferring of the power sources between the internal and the shore power sources, turn off the power supply switches in the system.

Handling Instructions for Electric Device/system

1. Appropriate Maintenance Intervals

- Because electric devices may have trouble, as time goes by, due to imperfect contact on oxidized relay contacts or deterioration of capacitors, maintain the devices/systems according to the "Remote Control System Electric Devices Maintenance Standards 1/3～3/3"

WARNING

- Neglect or delay in maintenance may cause a dangerous condition for the controlled machine and/or the vessel due to their malfunction.

2. Preparation Before Maintenance

- Read the instructions and check the drawings (the outline drawing and the assembly drawing) and the electric circuit diagram (particularly, the power supply circuit portion) to understand their functions and structures.

WARNING

- To avoid trouble from electric shocks, cut off the power supplies to the control stand or panel on the switchboard or the distribution board. For the maneuvering stand, because several other power supplies in addition to the power that supplies for the remote control system may be supplied to the stand, cut off all these power supplies, too.

3. Overhauling

- When opening the doors/covers of the control stand/panel, cut off the inner power supply switches for the remote control system and the telegraph system.

- Check that no power is supplied in the maneuvering stand/panel by using a multitester at the terminal boards.

4. Maintenance

- For the actual maintenance details, refer to the "Remote Control System Electric Devices Maintenance Standards 1/3～3/3"
- Clean the inside of the maneuvering stand/panel.

5. Assembly

- Reassemble electric devices in reverse order of disassembling without leaving any parts.

⚠ CAUTION

- Check the condition of stoppers to prevent possible falling.

6. Inspection

⚠ CAUTION

- Check that the controlled machine and/or the vessel are not moving by using the remote control system.

(1) To prevent initial trouble due to a voltage drop when the the electric power is supplied, turn on the power supply switches on the switchboard or the distribution board first.
(2) Turn on the power supply switches in the stand/panel.
(3) Shut the doors/covers completely to prevent the entry of dust or foreign matter and do not to open during operation.

- After confirming the safety of the controlled machine and/or the vessel, operate the remote control system to check the operation.

7. Troubleshooting When the Electric Power is Live

WARNING

- Because carrying out a troubleshooting when the electric power is live may cause electric shocks or short circuits, the work should be done by an electrician.

Remote Control System Electric Devices Maintenance Standards 1/3						◎:Adjust/Test ○:Repair ×:Change △:Change after checking the progress
Name	Intervals (year)					Inspection/Test, Adjustment, Repair, and/or Change
		.5	1	3	5	
Auxiliary Relay (Small capacity)			◎	○	△	◎: Check insertion of relays for looseness. ○: Check for contacts condition (carbon adhered). Clean contacts. △: If there is no problem on contacts, postpone schedule and then check them every 6 months.
Auxiliary Relay (Large capacity)		◎	△	×		◎: Check insertion of relays for looseness. △: Check for contacts condition (carbon adhered). Clean contacts. ×: Renew relays that directly operate sol. valves or motors every 3 years.
Limit Switch (On the controlled machine)	◎		○		△	◎: Check for looseness or slip of fixing at 1 month after delivery and then every 6 months. ○: Clean dirt and dust. △: Renew at 5 years after delivery and then check every 6 months.
Limit Switch (Not on the controlled machine)			◎	○	△	◎: Check for looseness or slip of fixing at 1 month after delivery and then every 6 months. ○: Clean dirt and dust. △: Renew at 5 years after delivery and then check every 6 months.
Annunciator			◎	○	△	◎: Check insertion of relays for looseness. ○: Check for contacts condition (carbon adhered). Clean contacts. △: If there is no problem on contacts, postpone schedule and then check them every 6 months.
Timer			◎	○	△	◎: Check insertion of relays for looseness. ○: Test timer function and renew fluctuating one or repair (Return to NABCO) △: If there is no problem on contacts, postpone schedule and then check them every 6 months.
Dimmer (Variable resistor)			◎	○	△	◎: Check for smooth control of light. ○: Check sliding portion for dust or carbon. Clean sliding portion. △: Renew dimmer that has damage on sliding portion.
Voltage Sensing Relay (Meter relay)			◎	○	△	◎: Check insertion of relays for looseness, and dial for slip. ○: Test function and renew fluctuating one. (Return to NABCO.) △: Test function and repair or renew fluctuating one.

Remote Control System Electric Devices Maintenance Standards 2/3						◎:Adjust/Test ○:Repair ×:Change △:Change after checking the progress
Name	Intervals (year)					Inspection/Test, Adjustment, Repair, and/or Change
		.5	1	3	5	
Switch			◎	○	△	◎: Check for looseness of screws. ○: Check for contacts condition (carbon adhered). Clean contacts. △: If there is no problem on contacts, postpone schedule and then check them every 6 months.
Indicator			◎	○	△	◎: Check for looseness of screws or pipe fittings. ○: Repair or renew indicator that has error or fluctuation of indication. (Repaired by NABCO.) △: If there is no problem on indication , schedule can be postponed.
Indicator Lamp	◎		○			◎: Check for function by test switch daily. ○: Check for looseness of terminal screws or dust.
Buzzer, Bell	◎		○			◎: Check for function by test switch daily. ○: Check for looseness of terminal screws or dust. Repair or renew when sound is changed.
Pressure Switch Temperature Switch		◎	○	△		◎: Check for looseness of terminals and set. value. ○: Check for contacts condition (carbon adhered). Clean contacts. △: Test operation and renew switch that has fluctuation of setting or damage on contacts.
Load Indicator Transmitter Blade Angle Transmitter			◎	○	△	◎: Check for bearings and grease up on gears. ○: Check for wear of springs and clean dust (carbon adhered) in synchros. △: Renew only bearings every 5 years, if there is no problem in rotatory motion, postpone schedule and then check them every 6 months.
Potentiometer			◎	○	△	◎: Check for bearings. ○: Check for ohm value of resistor. △: If there is no problem about ohm value of resistor, postpone schedule and then check them every 6 months.
Fan		◎			△	◎: Clean filters. △: Repair or renew when noise is produced.

Remote Control System Electric Devices Maintenance Standards 3/3	◎:Adjust/Test ○:Repair ×:Change △:Change after checking the progress				
Name	Intervals (year)				Inspection/Test, Adjustment, Repair, and/or Change
	.5	1	3	5	
Terminal board	◎				◎: Tighten screws.
Proximity switch	◎				◎: Clean sensor head. Check and adjust the clearance.

SPECIFICATIONS

FOR

MTHⅢ TYPE THRUSTER REMOTE CONTROL SYSTEM

(MICRO COMPUTER TYPE)

SHIPYARD : HYUNDAI HEAVY INDUSTRIES CO., LTD.

SHIP No. : H-1630 / H-1631 / H-1671 / H-1672 / H-1699
H-1700 / H-1701 / H-1733

THRUSTER TYPE : KT-157B3 (BOW)
KT-88B3 (STERN)

CLASS : LR

Nabtesco Corporation
MARINE CONTROL SYSTEMS COMPANY
ENGINEERING DEPARTMENT

a	キ ZH: 返却図ニヨリ訂正	C	'05 2/14	石川	—	東	馬躰
—		—	'04 10/25	石川	—	東	馬躰
REV. MARK	NOTE		DATE	DESIGNED		CHK.	APVD.

1. General

This thruster (controllable pitch propeller type) remote control system is designed to control the thruster blade angle by operating any of control levers provided in the wheel house (W/H) and wings due to employing microcomputers with overload protector (OLP) function for the main motor; in addition, the main motor and auxiliaries can be started and stopped from the W/H.
The system also provides blade angle indicators, ammeters for the main motor, and indication and alarm circuits necessary for operation.
In case of emergency such as trouble with the follow-up control, the system provides a non-follow-up control mode by which the blade angle can be controlled manually from the W/H.

2. Electric source

AC220V 60Hz 1ϕ (Max. 1A)
DC24V (Max. 3A)

3. Function

a) Control Position Changeover

Pressing the button switch on the W/H Stand enables the control position to change over from the W/H to a wing.
(See the Control Position Changeover Pattern on page 8.)
Before changing over the control position, match a control lever that will be given the control with the actual blade angle.
The blade angle indicators in the W/H and wings always show the actual blade angle.

b) Control Mode Changeover

Pressing the button switch on the W/H Stand enables the control mode to be changed over.Before changing over the control mode from non-follow-up to follow-up, match the control lever with the actual blade angle.

① Follow up pitch control

When operating a control lever, the position of potentiometer provided in the control lever deviates from that provided in the local blade angle transmitter; the differential voltage between them will be amplified to energize a solenoid valve, actuating a cylinder in the thruster.
At the same time, as the potentiometer in the local blade angle transmitter that is driven by a chain mechanism agrees with the control lever position, which means the differential voltage becomes zero, the solenoid valve will be de-energized.
Thus, the thruster blade angle always follows the control lever's order value correctly.

② Non-Follow up pitch control

Pressing the non-follow-up button switch on the W/H Stand causes a solenoid valve in the hydraulic unit to be energized, moving the blade angle in a direction for which the button switch is pressed.
When the button is released, the solenoid valve will be de-energized to stop the blade angle move.

c) OLP (Overload Protector) Function for Main Motor

When the main motor's load current exceeds the load current preset by the portable keyboard, the blade angle will be reduced automatically to decrease the load current in order to protect the main motor from being overloaded with the MOTOR FULL LOAD indicator lamp lit on the W/H Control Panel.
As the main motor's load current decreases, the blade angle will automatically return to a blade angle equivalent to the control lever position, which causes the MOTOR FULL LOAD indicator lamp to go off.

a) Rating current of main motor, 284.1 Amp. (For Bow)
b) CT ratio for OLP, 400 Amp. / 1Amp. (CT : AC1A / 40VA) (For Bow)
c) Rating current of main motor, 1323.2 Amp. (For Stern)
d) CT ratio for OLP, 2000 Amp. / 1Amp. (CT : AC1A / 40VA) (For Stern)

Caution: Keep the CT for OLP away from CTs for other devices.

d) Controller Operation

① Button Switches "CONTROL POWER ON" and "CONTROL POWER OFF"

Pressing the CONTROL POWER ON button switch supplies electric sources to the system.
As the CONTROL POWER OFF button switch is pressed, the electric sources will be turned off.

Caution: Before turning off the power sources, press the STOP button switch to stop the main motor and auxiliaries.

② "PUMP STOP" Button Switch (About FAN, it is Bow Thruster Only)

Pressing the PUMP STOP button switch stops pressure oil pump and fan when they have been running.

[The stop action also outputs a momentary and normally "closed" no-voltage contact signal]

③ "PUMP RUN" Button Switch (About FAN, it is Bow Thruster Only)

Pressing the PUMP RUN button switch sends starting signals to the pressure oil pump (and fan) starter, which causes the pressure oil pump and fan to start. Running of the pressure oil pump causes the PUMP RUN indicator lamp to light up (and the running of fan causes the FAN RUN lamp to light up.)

[The starting action also outputs a momentary and normally "open" no-voltage contact signal.]

④ "THRUSTER STOP" Button Switch

Pressing the THRUSTER STOP button switch when the main motor has been running causes the main motor to be stopped.

[The stop action also outputs a momentary and normally "closed" no-voltage contact signal.]

⑤ "THRUSTER RUN" Button Switch

After checking that the READY TO START indicator lamp is lit, pressing the THRUSTER RUN button switch sends a starting signal to the main motor starter, which causes the main motor to start.
When the main motor is running, the THRUSTER RUN indicator lamp will light up.

[The starting action also outputs a momentary and normally "open" no-voltage contact signal.]

⑥ "CONTROLLER ABNORMAL" Alarm

If the CONTROLLER ABNORMAL alarm is given when the control position has been the W/H or a wing, the blade angle before the alarm is given will be maintained.
It is recommend to change over the control mode immediately from follow to non-follow.

Alarm causes simultaneously given to the W/H and both wings are as follows:

- Blade angle transmitter's potentiometer is damaged.
- Control source failure.
- CPU abnormality.

The following alarms are given in a control position where the control right is given:

- W/H control lever's potentiometer is damaged.
- Starboard wing control lever's potentiometer is damaged.
- Port wing control lever's potentiometer is damaged.

⑦ "POWER REQUEST" Button Switch option

Pressing the POWER REQUEST button switch sends a main motor power request signal to the power management system (PMS) with the POWER REQUEST indicator lamp lit.
When the main motor is stopped or power available on , the POWER REQUEST indicator lamp will go off to release the main motor power request signal.
(The release method can be chosen with a ten key)
Besides that, pressing the POWER REQUEST button switch again before the main motor runs cancels the signal.

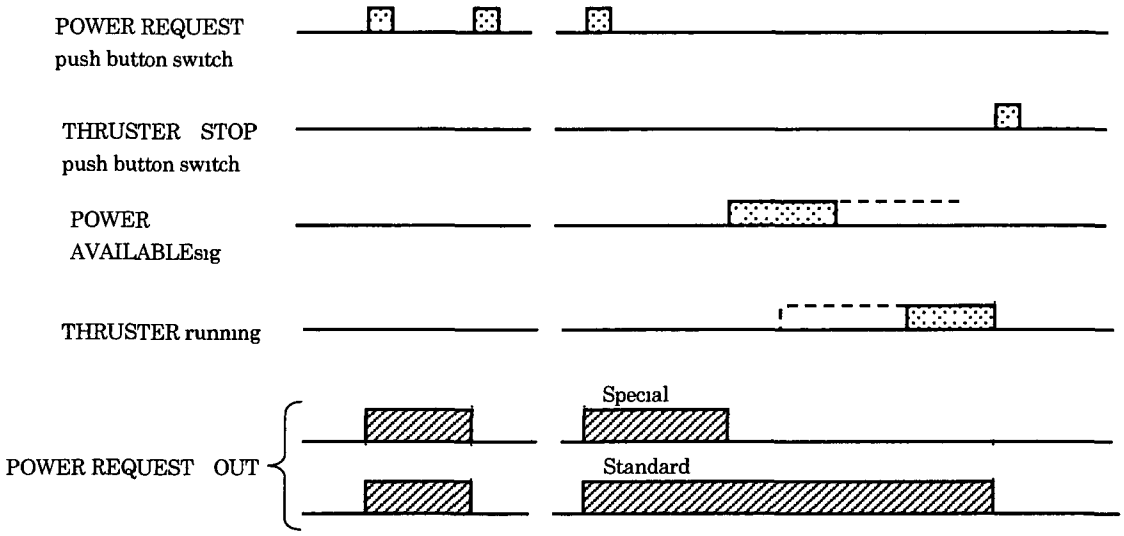

⑧ Auto pitch reduct

The blade angle is automatically reduced to the reduct level by the auto pitch reduct signal from the outside.
Then, the "AUTO PITCH REDUCT" alarm lamp is lit.
The lever can be operated in a range less than the reduct level.
When the auto pitch reduct signal is restored and the lever is turned to a position less than the reduct level, the operating condition of auto pitch reduct will be reset with the alarm lamp turned off.

4. Alarm Pattern (Normally Closed)

The alarm pattern is preparing standard specification and special specification, and can choose them with a ten key.

Standard specification

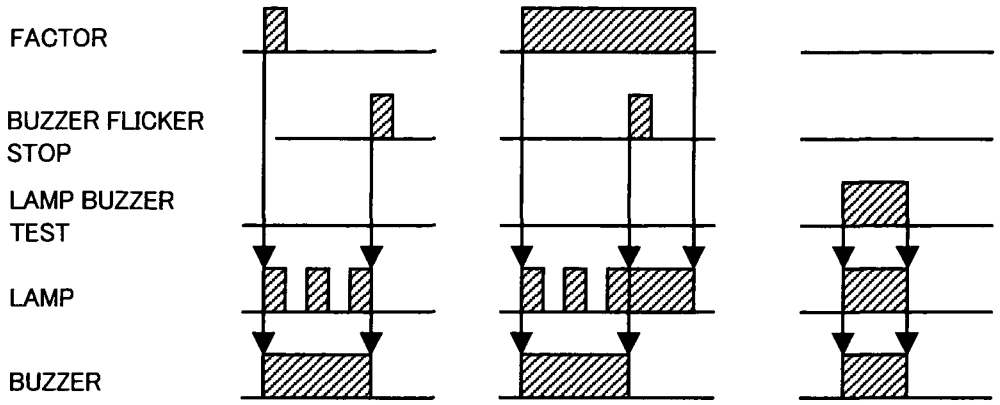

Special specification

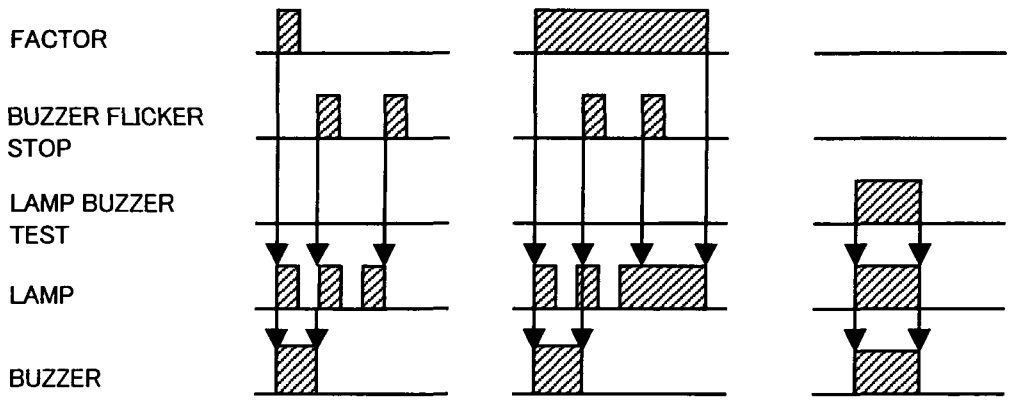

5. Switch Operation Pattern

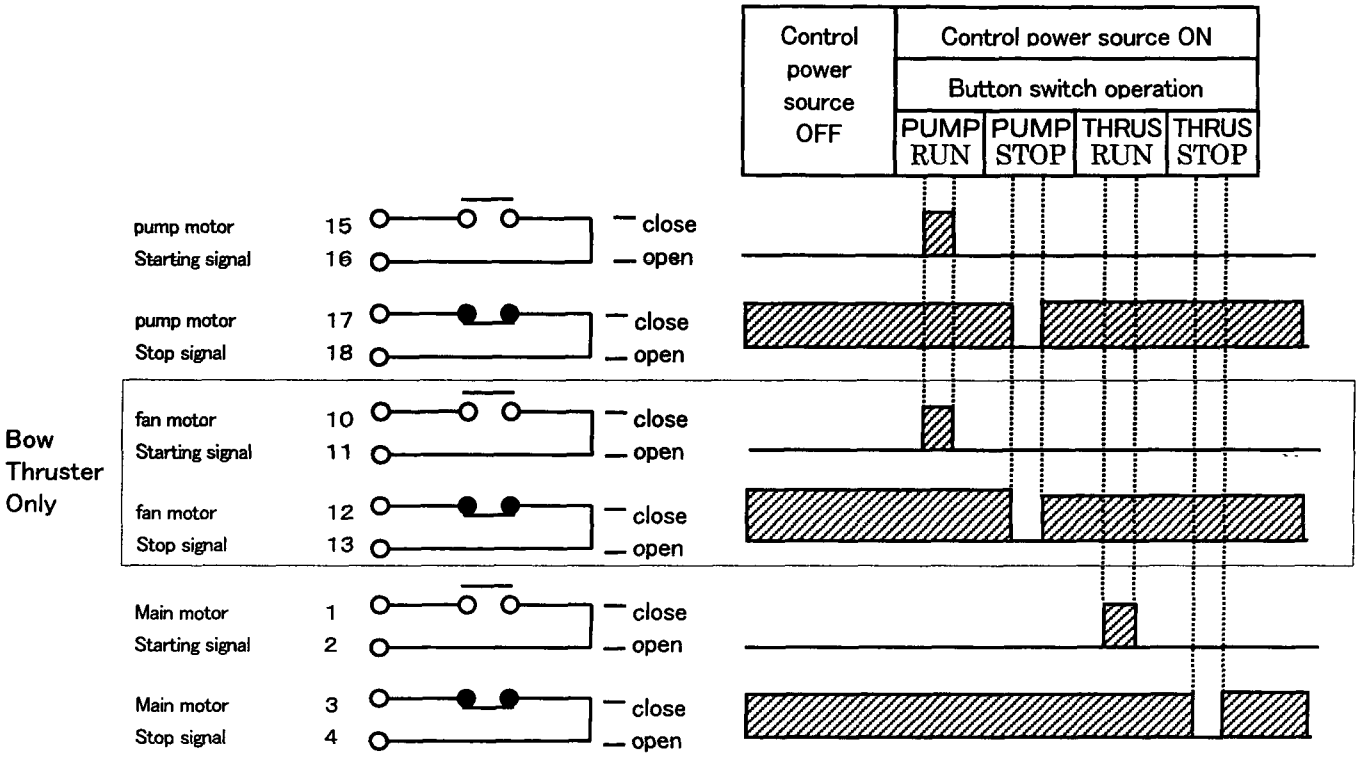

Caution. Contact capacity -----3A DC30V、3A AC250V

To protect the remote control system from surge voltage, attach protective devices such as surge killers to loads such as relays and timers.

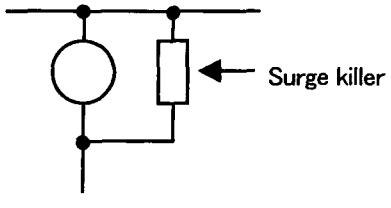

6.Change-over of control position

	Push button				Indicator lamp				Actual control position	Re-marks
	W/H	WING	P/W CONT. AVAIL	S/W CONT. AVAIL	W/H	WING	P/W CONT. AVAIL	S/W CONT. AVAIL		
W/H ↓ S/W					○				W/H	
		凸			○	⊗	⊗	⊗	W/H	
				凸		○		○	S/W	
S/W ↓ W/H						○		○	S/W	
	凸				⊗	○		○	S/W	
	凸				○				W/H	
W/H ↓ S/W ↓ W/H					○				W/H	Wrong way
		凸			○	⊗	⊗	⊗	W/H	
	凸				○				W/H	
S/W ↓ W/H ↓ S/W						○		○	S/W	Wrong way
	凸				⊗	○		○	S/W	
		凸				○		○	S/W	
W/H ↓ P/W					○				W/H	
		凸			○	⊗	⊗	⊗	W/H	
			凸			○	○		P/W	

凸 : Push button switch operation

○ : Indicator lamp continuous lighting

⊗ : Indicator lamp flickering / buzzer sounding

7. Outputs to VDR Recorder

① Blade Angle Order Signal (RS-422 based on IEC 61162.)
The blade angle order signal (Port 25°- 0°- Starboard 25°) is outputted in serial communication

② Actual Blade Angle Signal (RS-422 based on IEC 61162.)
The actual blade angle signal (Port 25°- 0°- Starboard 25°) is outputted in serial communication

③ Control Position, Control Mode (NOT USED)
Control position and mode signal is outputted in relay contact

Nabtesco

COMMUNICATION PROTOCOL EXPLANATION
FOR
VOYAGE DATA RECORDER (VDR)
OF
MTHⅢ TYPE THRUSTER REMOTE CONTROL SYSTEM

Nabtesco Corporation
MARINE CONTROL SYSTEMS COMPANY
ENGINEERING DEPARTMENT

a	セ ZH: NABCO ロゴ変更	C	'04 9.28	石川	——	東	馬場.
—	(3次品標準)	—	'03.10.10	小林	——	東	松本
REV. MARK	NOTE		DATE	DESIGNED		CHK.	APVD.

1. General

The serial signal transmission for VDR is outputted from between the terminal 106(TX-)-107(TX+) of terminal board unit. (RS-422)
Signal transmission is a serial output based on IEC61996 and IEC61162.
Thruster actual blade angle(P25-S25) and thruster order signal(P25-S25)are outputted from a serial communication output.

2. Communication setup with VDR

-1. Communication system : Tone step synchronous formula serial
-2. Data length : 8bit
-3. Start bit : 1bit
-4. Stop bit : 1bit
-5. Parity : Nothing
-6. Transmission speed : 4800bps
-7. Effective character : ASCII

3. Thruster control order signal

0 1 2 3 4 5
$xxTRC, x, x.x, x.x, A *hh<cr><lf>

Field No.	Data form	Field name	Definition
0	**$xxTRC**	Header	
1	**x**	Number of thruster, bow or stern	Numeric character to identify a thruster in the system. This is numbered from centre-line. This field is single digit: Odd=Bow thruster Even=Stern thruster
2	**x.x**	RPM order signal (Not used)	RPM order signal 0-100% from zero to maximum rpm
3	**x.x**	Thruster order signal	Thruster order signal -100-0-100% from port max. to stbd max.
4	**A**	Data status	A=data valid V=data invalid
5	***hh**	Check-sum	

Example : No.2 bow thruster order=PORT50%
$RCTRC, 3, , -50.0, A *hh<cr><lf>

4. Thruster actual blade angle signal

0 1 2 3 4 5
$xxTRD, x, x.x, x.x, A *hh<cr><lf>

Field No.	Data form	Field name	Definition
0	**$xxTRD**	Header	
1	**x**	Number of thruster, bow or stern	Numeric character to identify a thruster in the system. This is numbered from centre-line. This field is single digit: Odd=Bow thruster Even=Stern thruster
2	**x.x**	RPM response (Not used)	RPM response signal 0-100% from zero to maximum rpm
3	**x.x**	Thruster actual blade angle	Thruster actual blade angle signal -100-0-100% from port max. to stbd max.
4	**A**	Data status	A=data valid V=data invalid
5	***hh**	Check-sum	

Example : Stern thruster actual blade angle =STBD50%

$RCTRD, 2, , 50.0, A *hh<cr><lf>

COMPONENTS LIST
FOR
MTH Ⅲ TYPE THRUSTER REMOTE CONTROL SYSTEM

SHIPYARD : HYUNDAI HEAVY INDUSTRIES CO., LTD.

S.NO. : H-1630 / H-1631 / H-1671 / H-1672 / H-1699
H-1700 / H-1701 / H-1733

Nabtesco Corporation

MARINE CONTROL SYSTEMS COMPANY
ENGINEERING DEPARTMENT

c	キ ZH: 項目 340 追加	C	'05 5/25	石川	——	東	馬躰
b	キ ZH: 項目 100,101 ノ品番変更, 項目 200 ノ品番変更及ビ個数変更 項目 201 追加	C	'05 4/1	石川	——	東	馬躰
a	キ ZH: 返却図ニヨリ項目 100 ノ個数変更及ビ項目 101 追加	C	'05 2/14	石川	——	東	馬躰
—		—	'04 10/26	石川	——	東	馬躰
REV. MARK	NOTE	—	DATE	DESIGNED		CHK.	APVD.

REF. NO. 項目	CODE NO. ｺｰﾄﾞ	NABCO PIECE NO. 品　番	DESCRIPTION 品　名	TYPE 型式	Q'TY 個数	PAINTING COLOR MUNSELL 塗装色	MARK 記号	PIPING JOINT 接手	MARK 記号	REMARKS 記　事	SUPPLIED BY 所掌
100	123	73078064-01 ~~F3074839-13~~ F3078064-01	THRUSTER CONTROLLER	MTHⅢ-C1	~~2~~ 1	MAKER'S STANDARD	TZZ			W/H STAND WITH FLAT CABLE (2m) (BOW)	Nabtesco
101	123	73078907-01 ~~F3074839-13~~ F3078907-01	THRUSTER CONTROLLER	MTHⅢ-C1	1	MAKER'S STANDARD	TZZ			W/H STAND WITH FLAT CABLE (2m) (STERN)	Nabtesco
110	931	F3075636-12 W3075636-12 73075636-12	TERMINAL BOARD UNIT	MTHⅢ-T1	2	MAKER'S STANDARD	TZZ			W/H STAND AC220V/DC24V (BOW & STERN)	Nabtesco
200	123	~~73075907-01~~ 73079047-01 F3079047-01	THRUSTER CONTROLLER	MTHⅢ-W1	4 2	MAKER'S STANDARD	TZZ			WING IP56 (BOW)	Nabtesco
201	123	73079048-01 F3079048-01	THRUSTER CONTROLLER	MTHⅢ-W1	2	MAKER'S STANDARD	TZZ			WING IP56 (STERN)	Nabtesco
300	726	F3796139-01P 72796139-02	KCF-52 BLADE ANGLE TRANSMITTER		1	MAKER'S STANDARD	TZZ			when chain enters the KCF body: PORT FOR KT-157B3 (BOW)	Nabtesco
310	726	F3796139-01P 72796139-03	KCF-52 BLADE ANGLE TRANSMITTER		1	MAKER'S STANDARD	TZZ			when chain enters the KCF body: PORT FOR KT-88B3 (STERN)	Nabtesco
320	926	74759141-01	PUSH BUTTON SWITCH		2		TXX			FOR EMERG STOP (BOW & STERN)	Nabtesco
330	926	74757673-01	SWITCH GUARD		2		TXX			FOR EMERG STOP (BOW & STERN)	Nabtesco
340	950	74759133-01	PACKING		2		TXX			FOR EMERG STOP (BOW & STERN)	Nabtesco
400		74Y54676-01	SPARE PARTS		1SET						Nabtesco

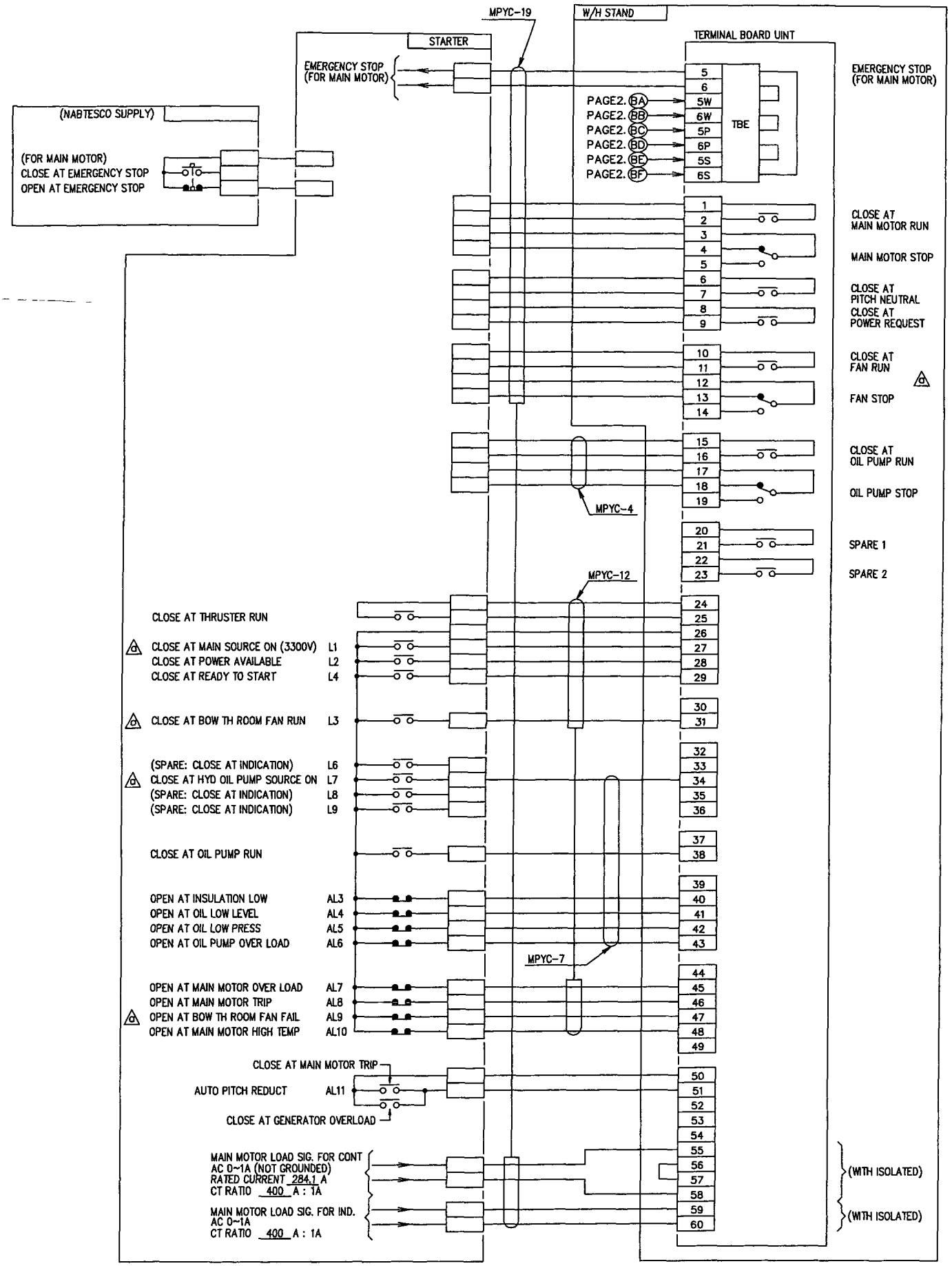

REV. MARK	NOTE	DATE	DESIGNED	CHK	APVD.
a (x5)	※ZH: 返却図ニヨリ訂正	'05 4.6	石川	—	多郷
—	M: フルスペック仕様	'04 9.30	石川	東	馬鉢

MATERIAL
WEIGHT
RELATION NO. HHI-1630/31/71 72/99/1700/01/33
SCALE

NAME
I/O LIST
THRUSTER REMOTE CONTROL SYSTEM
盤間配線図
スラスタ遠隔操縦装置

CODE NO.

DWG NO.
73H60507-01 1/6

Nabtesco Corporation

AC

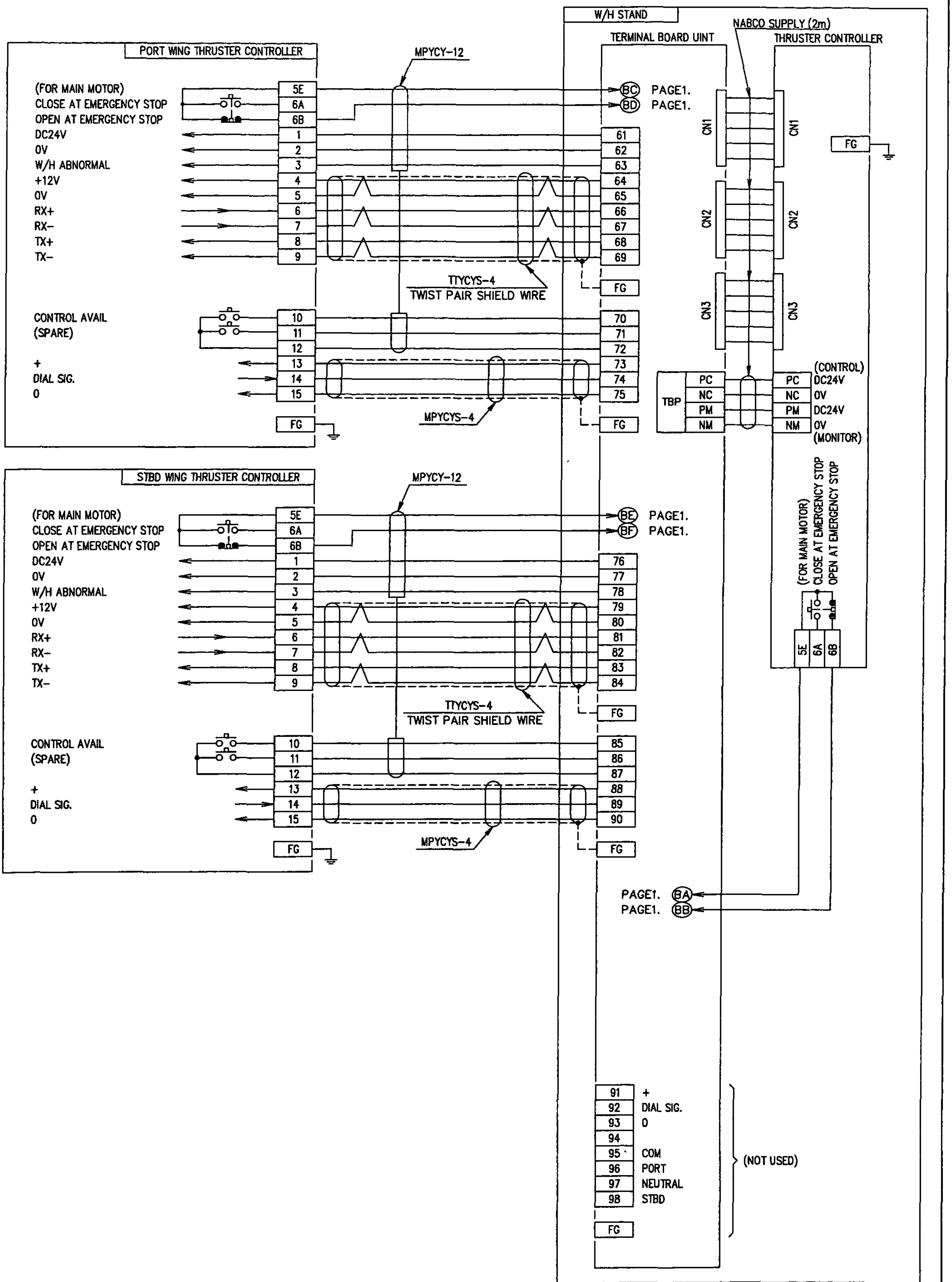

(FOR BOW)

								MATERIAL	NAME I/O LIST THRUSTER REMOTE CONTROL SYSTEM
								WEIGHT	盤間配線図 スラスタ遠隔操縦装置
			—					RELATION NO.	
			REV. MARK	NOTE	DATE	DESIGNED	CHK.	APVD. SCALE	CODE NO. / DWG. NO. 73H60507-01 2/6

Nabtesco Corporation

AC

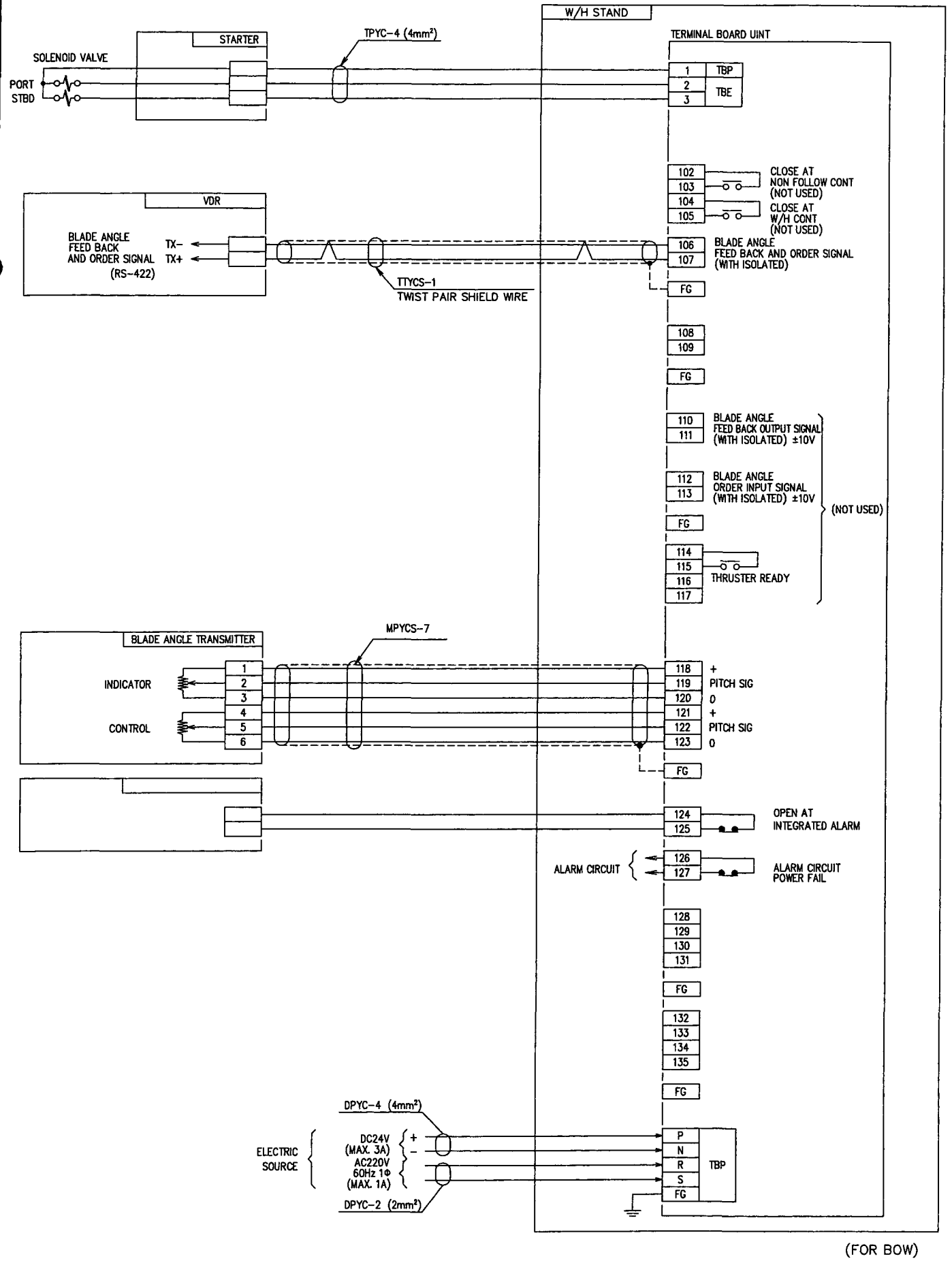

(FOR BOW)

REV. MARK	NOTE	DATE	DESIGNED	CHK.	APVD.	MATERIAL	NAME I/O LIST THRUSTER REMOTE CONTROL SYSTEM
						WEIGHT	盤間配線図 スラスタ遠隔操縦装置
—						RELATION NO	CODE NO / DWG NO
						SCALE	73H60507-01 3/6

Nabtesco Corporation

AC

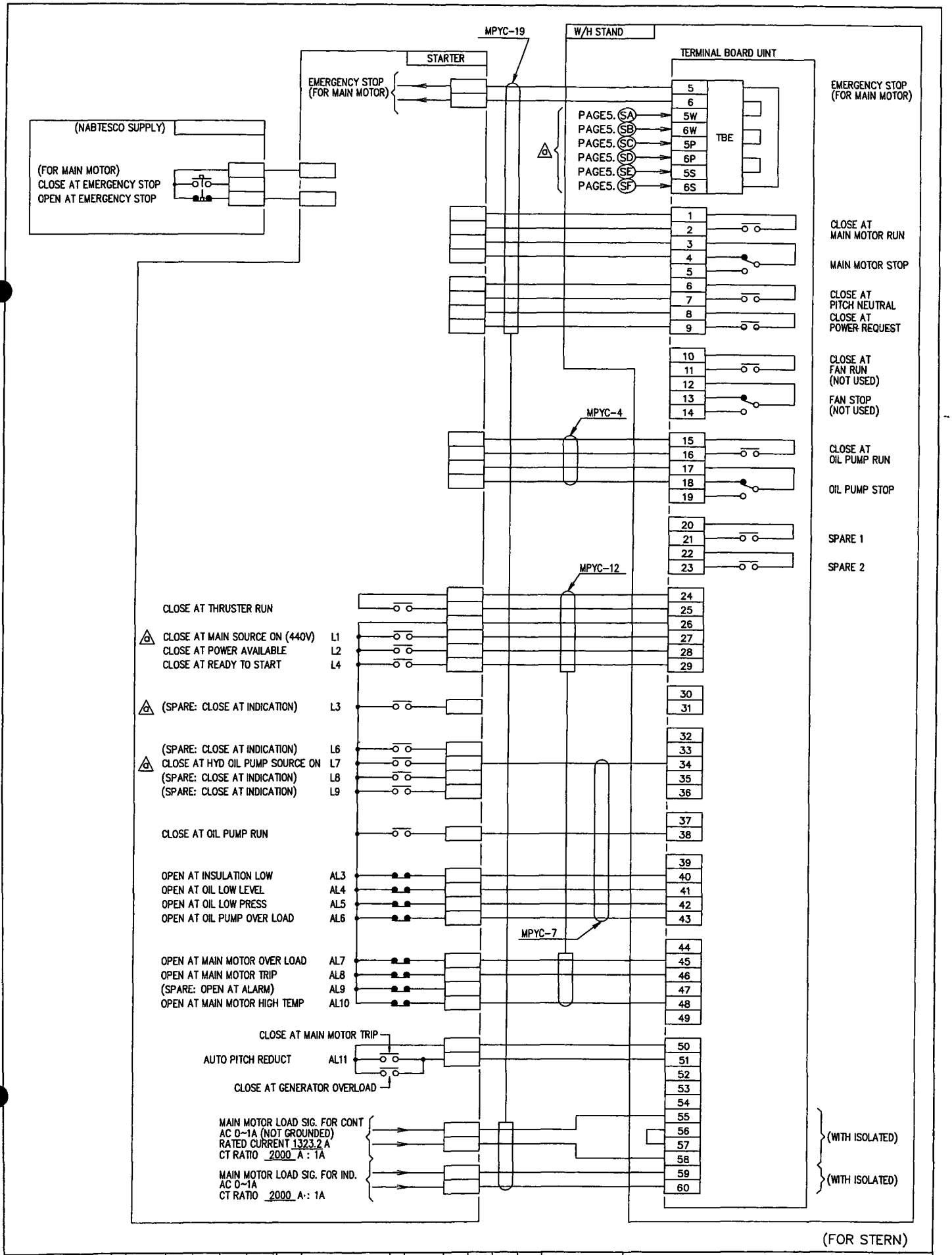

(FOR STERN)

REV. MARK	NOTE	DATE	DESIGNED	CHK.	APVD.
0 ×4	キ,ミZH: 返却図ニヨリ訂正	C			
—					

MATERIAL

WEIGHT

RELATION NO.

SCALE

NAME

I/O LIST
THRUSTER REMOTE CONTROL SYSTEM
盤間配線図
スラスタ遠隔操縦装置

CODE NO.

DWG. NO.

73H60507-01 4/6

Nabtesco Corporation

AC

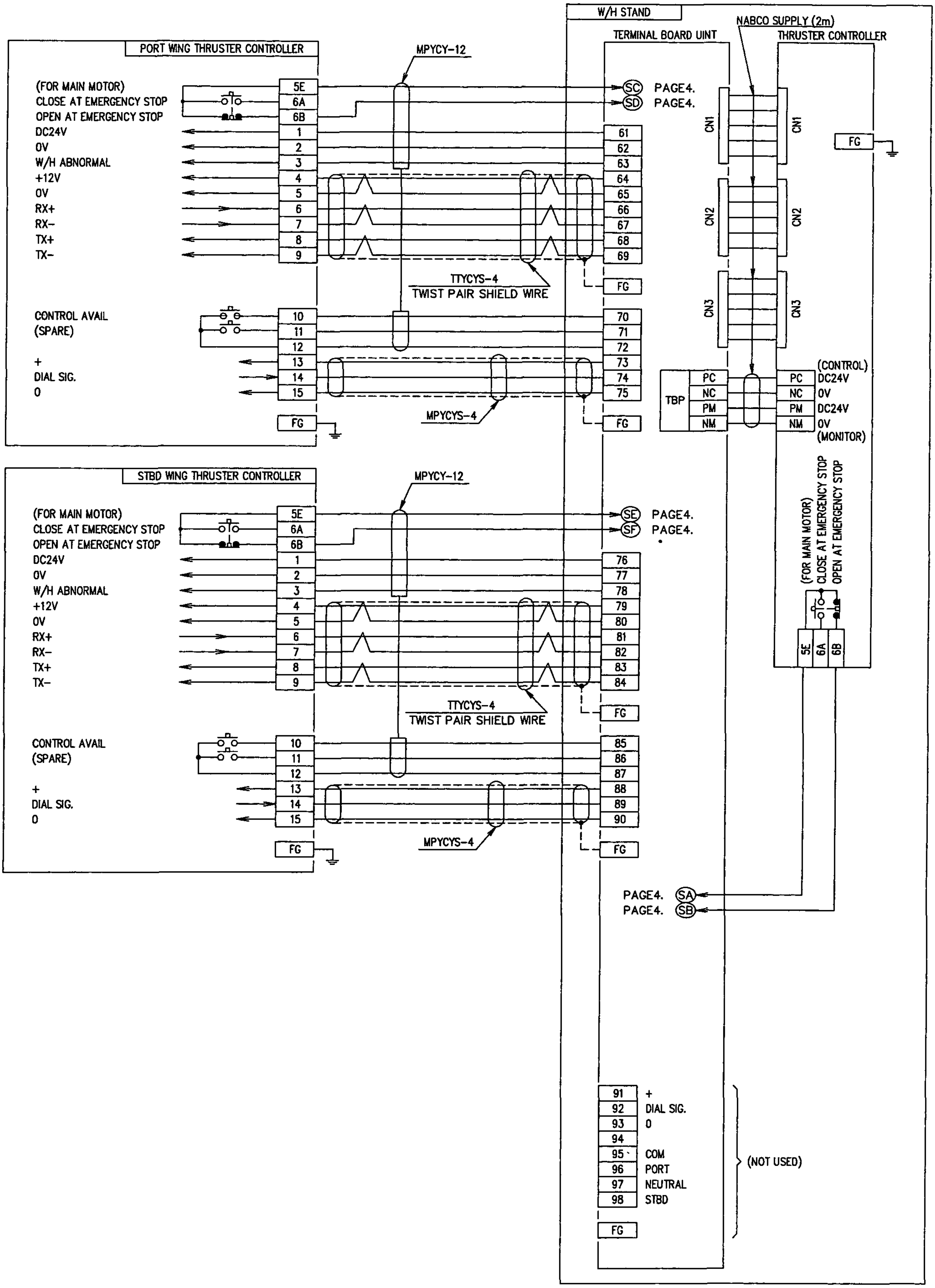

(FOR STERN)

								MATERIAL	NAME	I/O LIST THRUSTER REMOTE CONTROL SYSTEM
								WEIGHT		盤間配線図 スラスタ遠隔操縦装置
		—						RELATION NO.	CODE NO.	DWG. NO.
		REV. MARK	NOTE	DATE	DESIGNED	CHK.	APVD.	SCALE		73H60507-01 5/6

Nabtesco Corporation

AC

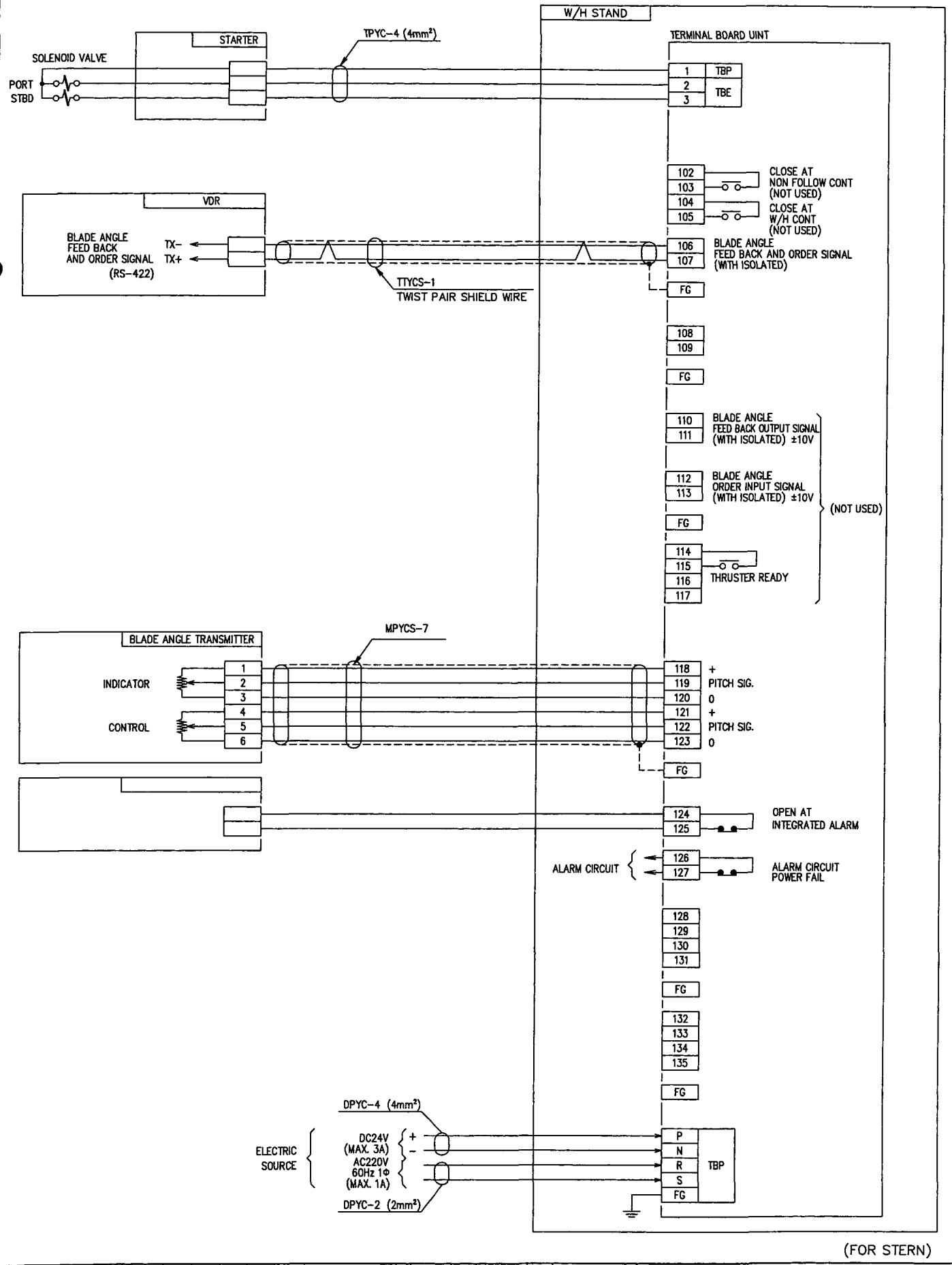

(FOR STERN)

										MATERIAL	NAME I/O LIST THRUSTER REMOTE CONTROL SYSTEM
										WEIGHT	盤間配線図 スラスタ遠隔操縦装置
										RELATION NO.	CODE NO. / DWG. NO. 73H60507-01 6/6
										SCALE	
			REV. MARK	NOTE	DATE	DESIGNED	CHK.	APVD.			

削り加工	呼び寸法区分	許容差	30ヲコエ120以下	±0.3	表面アラサ			▽▽▽	6.3S	(1.6a)
	0.5以上 6以下	±0.1	120ヲコエ315以下	±0.5	仕上記号	Rmax	(Ra)	▽▽	25S	(6.3a)
	6ヲコエ 30以下	±0.2	315ヲコエ1000以下	±0.8	▽▽▽▽	0.8S	(0.2a)	▽	100S	(25a)

TOP BOARD COLOR : BLACK (MUNSELL : N2.0)
SURFACE TREATMENT: ZINC PLATING
(CHROMATE TREATMENT)

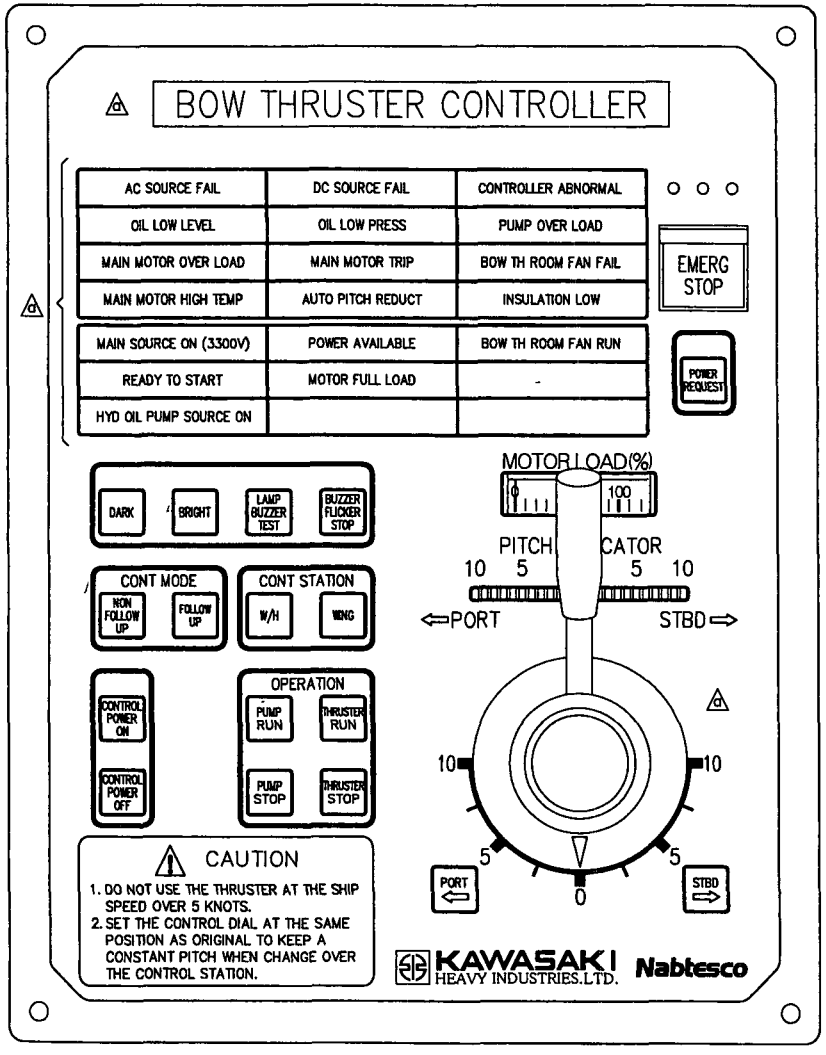

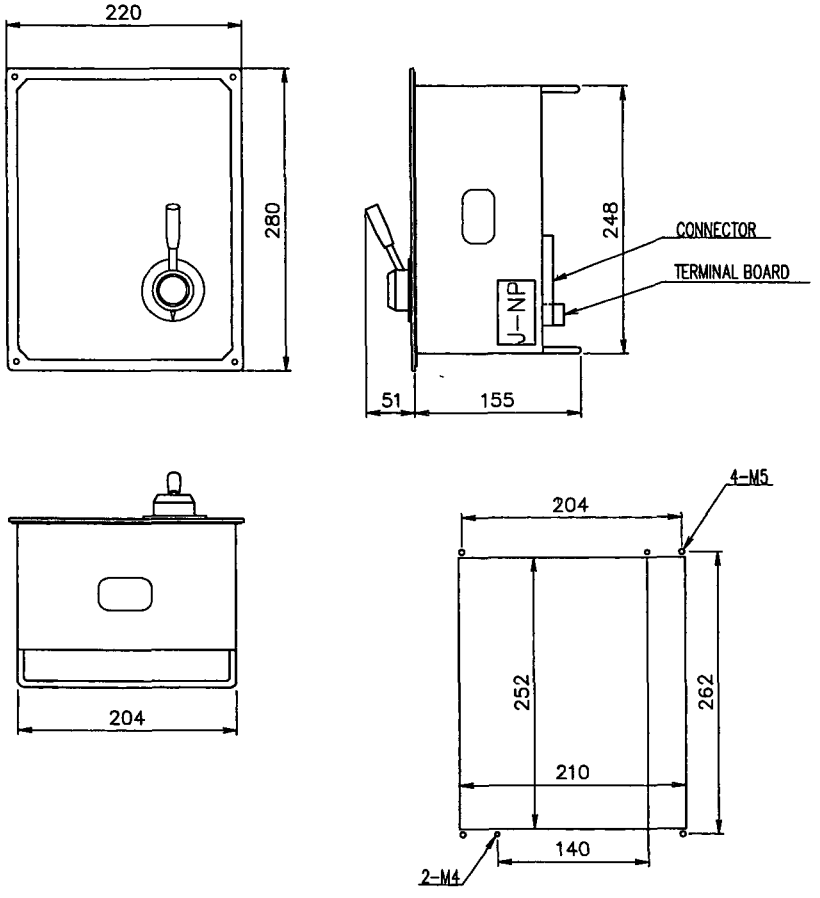

REV. MARK	NOTE		DATE	DESIGNED	CHK.	APVD
a x3	※ZH: 名称変更,追加及びレバータイプへ変更スル	c	'05 4/6	石川	—	東
—	M: 73076909	-	'04 9/30	石川	—	東

MATERIAL
WEIGHT ABOUT 6Kg
RELATION NO. 74DS40907-02 74DS40930-01
SCALE 1×0.7 (1×0.2)

NAME: BOW THRUSTER CONTROLLER

CODE NO. 123

DWG. NO. 73078064

削り加工	呼び寸法区分	許容差	30ヲコエ120以下	±0.3	表面アラサ			▽▽▽	6.3S	(1.6a)
	0.5以上 6以下	±0.1	120ヲコエ315以下	±0.5	仕上記号	Rmax	(Ra)	▽▽	25S	(6.3a)
	6ヲコエ 30以下	±0.2	315ヲコエ1000以下	±0.8	▽▽▽▽	0.8S	(0.2a)	▽	100S	(25a)

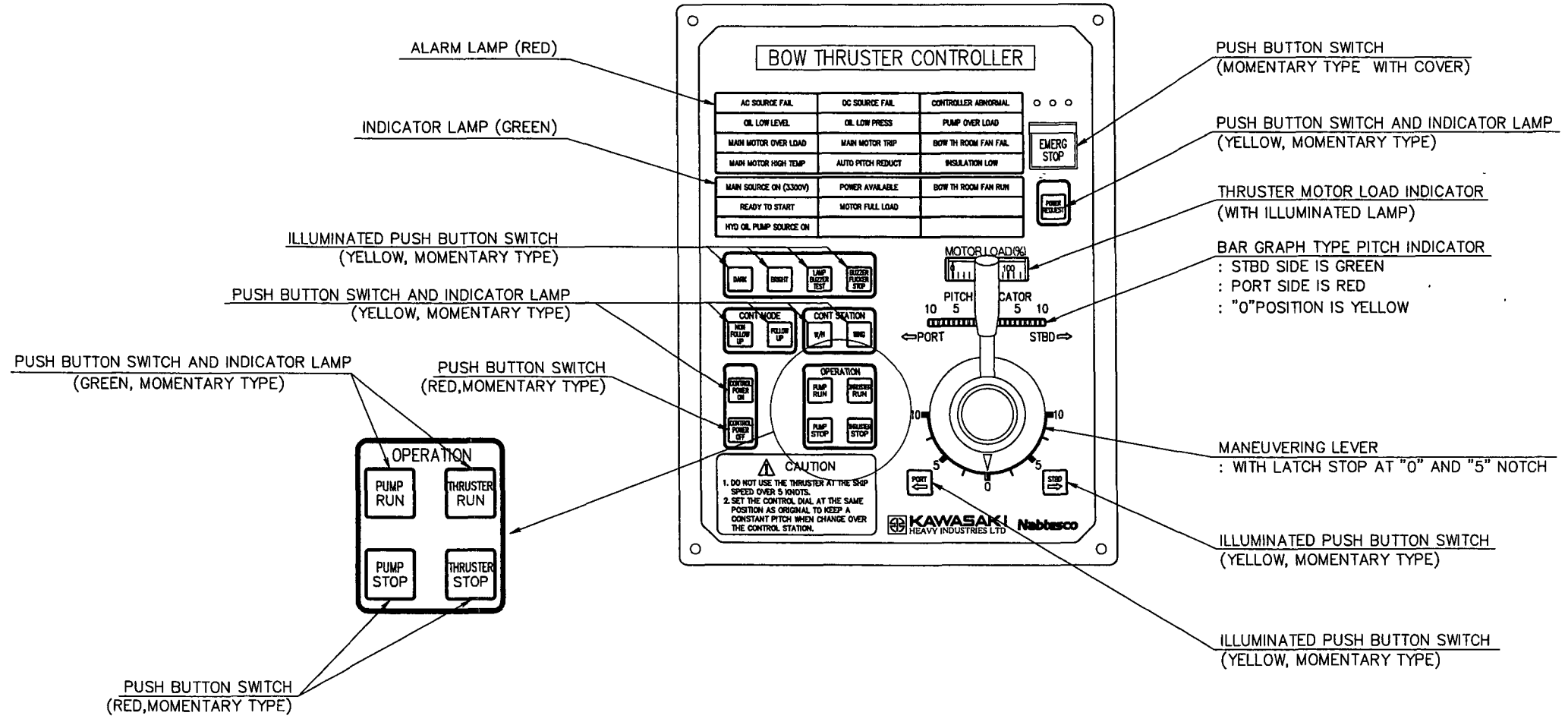

REV. MARK	NOTE		DATE	DESIGNED	CHK.	APVD.
—	M:F3074839-13	-	'05 4/6	石川	—	

MATERIAL
WEIGHT
RELATION NO.
SCALE -

NAME
BOW THRUSTER CONTROLLER
(PANEL ARRANGEMENT)

CODE NO.	DWG. NO.
123	F3078064

削り加工	呼ビ寸法区分	許容差	30ヲコエ120以下	±0.3	表面アラサ			▽▽▽	6.3S	(1.6a)
	0 5以上 6以下	±0.1	120ヲコエ315以下	±0.5	仕上記号	Rmax	(Ra)	▽▽	25S	(6.3a)
	6ヲコエ 30以下	±0 2	315ヲコエ1000以下	±0 8	▽▽▽▽	0.8S	(0.2a)	▽	100S	(25a)

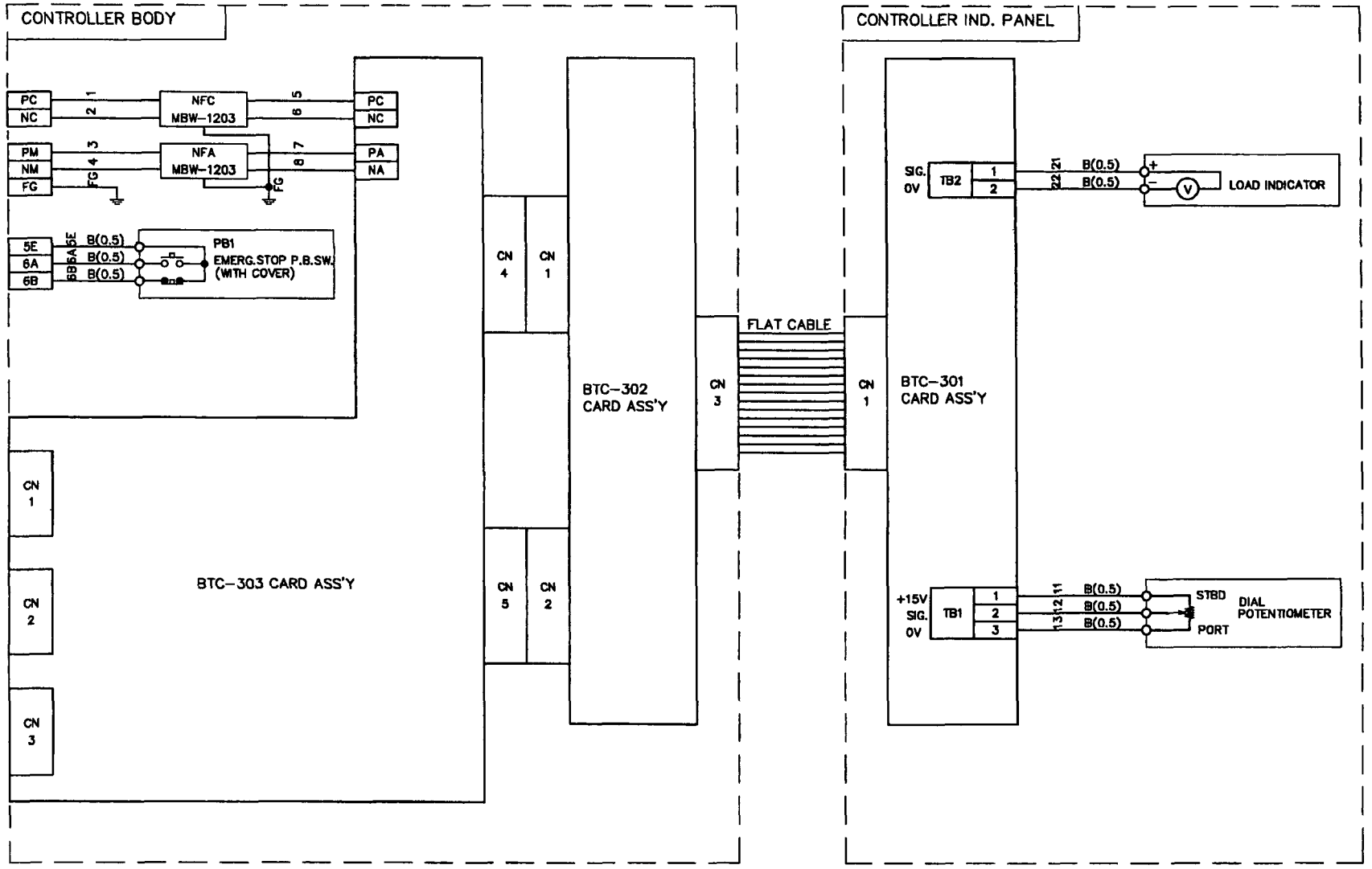

REV. MARK	NOTE		DATE	DESIGNED		CHK.	APVD.
a	B3074839-13= 訂正	c	'04 10/25	石川	—	[illegible]	[illegible]
—	M: W3074839-11 MTHⅢ TYPE	-	'04 10.7	石川	—	東	馬躰

MATERIAL

WEIGHT

RELATION NO. 73074839-13 F3074839-13 B3074839-13

SCALE 1×0.7 (1×0.2)

NAME MTHⅢ-C1 THRUSTER CONTROLLER

WIRING DIAGRAM

CODE NO. 123

DWG. NO. W3074839-13

Nabtesco Corporation

削り加工	呼び寸法区分	許容差	30ヲコエ120以下	±0.3	表面アラサ			▽▽▽	6.3S	(1.6a)
	0.5以上 6以下	±0.1	120ヲコエ315以下	±0.5	仕上記号	Rmax	(Ra)	▽▽	25S	(6.3a)
	6ヲコエ 30以下	±0.2	315ヲコエ1000以下	±0.8	▽▽▽▽	0.8S	(0.2a)	▽	100S	(25a)

TOP BOARD COLOR : BLACK (MUNSELL : N2.0)
SURFACE TREATMENT: ZINC PLATING
(CHROMATE TREATMENT)

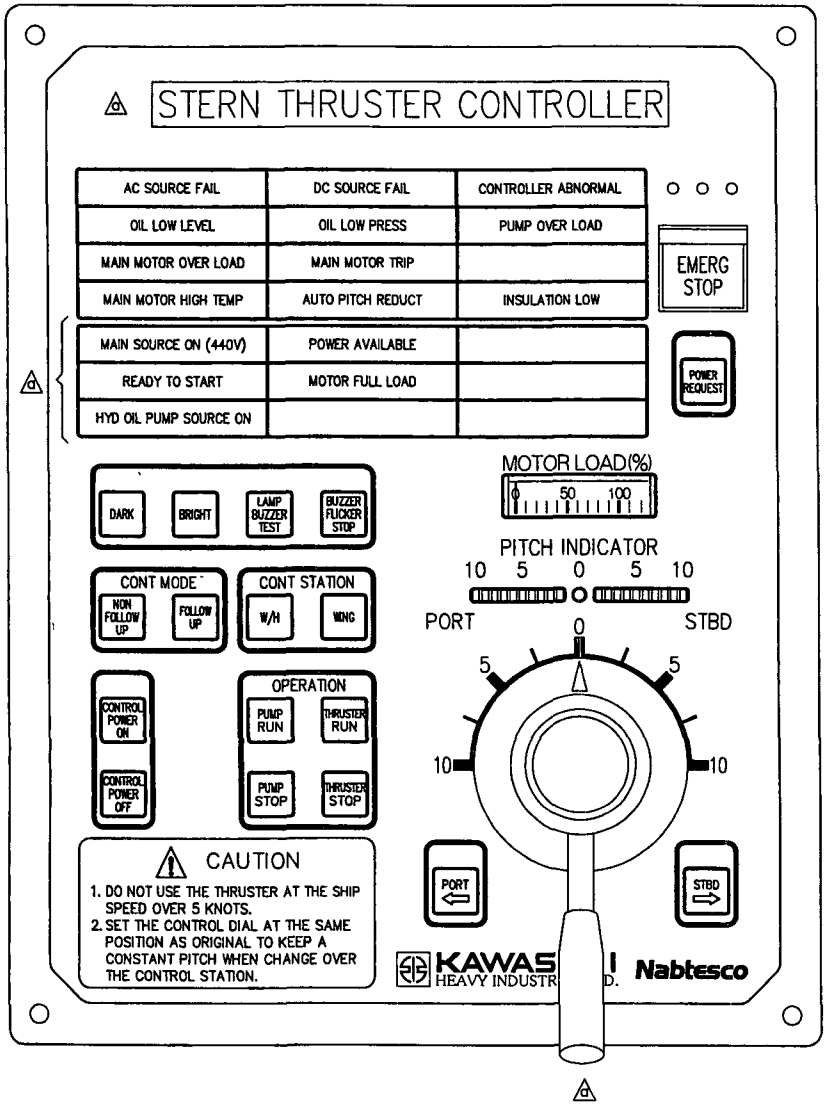

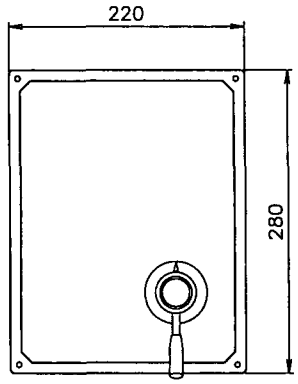

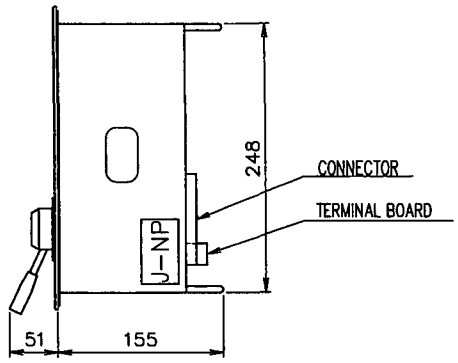

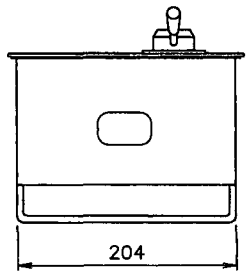

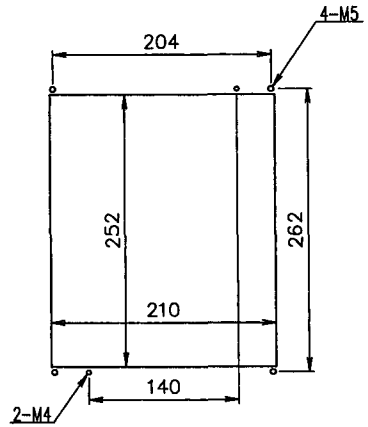

PANEL CUT

REV. MARK	NOTE		DATE	DESIGNED	CHK.	APVD
a x3	※ZH: 名称変更,追加及びレバータイプへ変更スル	C	'05 4/6	石川	—	有本
—	M: 73078064	—	'05 2/14	石川	—	東

MATERIAL
WEIGHT ABOUT 6Kg
RELATION NO. 74DS40907-02 74DS40930-01
SCALE 1×0.7 (1×0.2)

NAME: STERN THRUSTER CONTROLLER
CODE NO. 123
DWG. NO. 73078907

Nabtesco Corporation

削り加工	呼び寸法区分	許容差	30ヲコエ120以下	±0.3	表面アラサ			▽▽▽	6.3S	(1.6a)
	0.5以上 6以下	±0.1	120ヲコエ315以下	±0.5	旧記号	Rmax	(Ra)	▽▽	25S	(6.3a)
	6ヲコエ 30以下	±0.2	315ヲコエ1000以下	±0.8	▽▽▽▽	0.8S	(0.2a)	▽	100S	(25a)

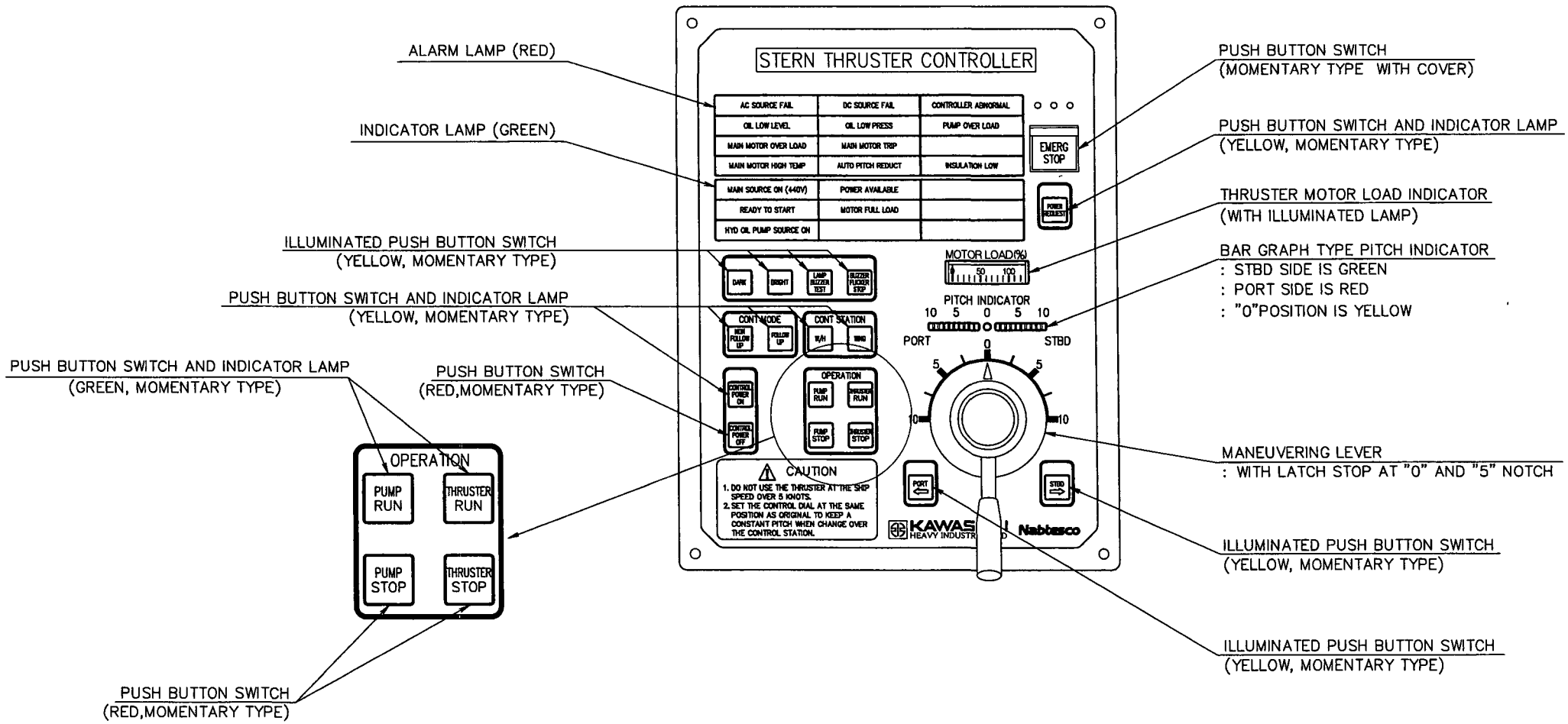

REV. MARK	NOTE		DATE	DESIGNED	CHK.	APVD.
—	M:F3074839-13	-	'05 4/6	石川	—	

MATERIAL
WEIGHT
RELATION NO.
SCALE -

NAME
STERN THRUSTER CONTROLLER
(PANEL ARRANGEMENT)

CODE NO. 123
DWG. NO. F3078907

Nabtesco Corporation

削り加工	呼び寸法区分	許容差	30ヲコエ120以下	±0.3	表面アラサ			▽▽▽	6.3S	(1.6a)
	0.5以上 6以下	±0.1	120ヲコエ315以下	±0.5	仕上記号	Rmax	(Ra)	▽▽	25S	(6.3a)
	6ヲコエ 30以下	±0.2	315ヲコエ1000以下	±0.8	▽▽▽▽	0.8S	(0.2a)	▽	100S	(25a)

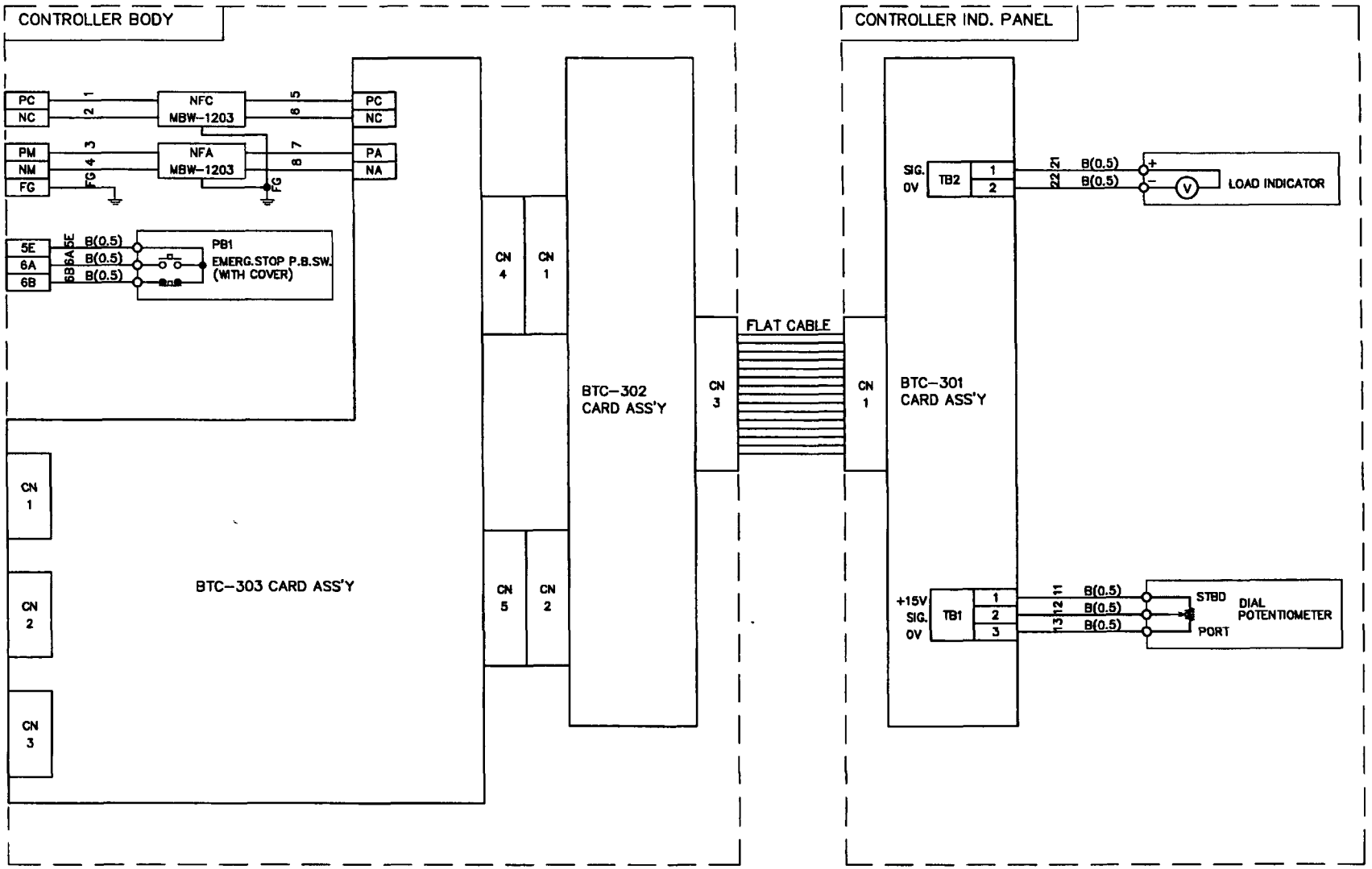

REV. MARK	NOTE		DATE	DESIGNED	CHK.	APVD.
a	B3074839-13=訂正	c	'04 10/25	石川	—	幸
—	M: W3074839-11 MTHIII TYPE	–	'04 10.7	石川	—	東

MATERIAL

WEIGHT

RELATION NO.
73074839-13
F3074839-13
B3074839-13

SCALE
1×0.7 (1×0.2)

NAME
MTH III -C1
THRUSTER CONTROLLER
WIRING DIAGRAM

CODE NO.
123

DWG. NO.
W3074839-13

Nabtesco Corporation

削り加工	呼び寸法区分	許容差	30ヲコエ120以下	±0.3	表面アラサ			▽▽▽	6.3S	(1.6a)
	0.5以上 6以下	±0.1	120ヲコエ315以下	±0.5	仕上記号	Rmax	(Ra)	▽▽	25S	(6.3a)
	6ヲコエ 30以下	±0.2	315ヲコエ1000以下	±0.8	▽▽▽▽	0.8S	(0.2a)	▽	100S	(25a)

SURFACE TREATMENT: ZINC PLATING
(CHROMATE TREATMENT)

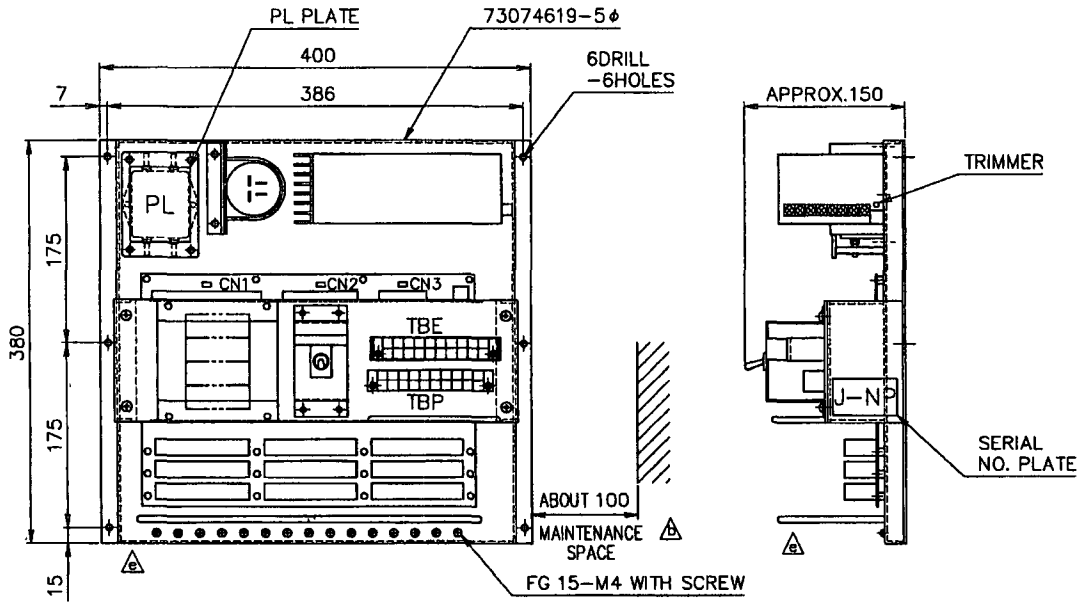

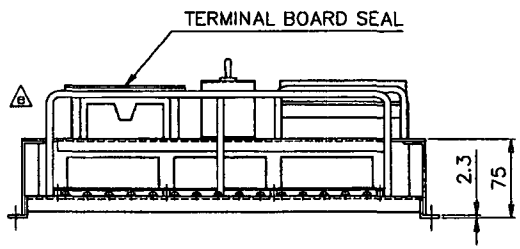

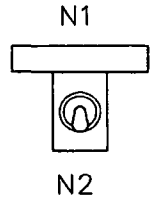

DETAILS OF SWITCH
(S=1:2)

N2	ON OFF	BLACK
N1	POWER SOURCE	BLACK
N.NO.	NAME PLATE LETTERING 銘板彫刻文字	COLOR 文字色

ITEM	CONTACT FOR EMERG. STOP SIG.	AC SOURCE VOLTAGE
-12	"b" TYPE	AC170~264V 50/60Hz
-11	"a" TYPE	AC170~264V 50/60Hz
-02	"b" TYPE	AC85~132V 50/60Hz
-01	"a" TYPE	AC85~132V 50/60Hz

(For Bow & Stern)

								b x1	セZH: メンテスペース追加	c	'04 4.9	石川	小林	東	松本	MATERIAL	
e X3	セZH ステーヲ追加	B	'04 11.18	ヤヤ	石川	才本	馬鉢	a	B3075636 ニ訂正	c	'04 3/2	ヤヤ	小林	東	松本	WEIGHT	ABOUT 9Kg
d	W3075636 ニ訂正	c	'04 6.9	石川	—	東	馬鉢	—	MTHⅢ TYPE	-	'03 10/10	小林	-	東	松本	RELATION NO.	73075636 W3075636 ~~B3075636~~
C	B3075636 ヲ鉢消	c	'04 4.28	ヤヤ	小林	ヤM	松本	REV. MARK	NOTE		DATE	DESIGNED		CHK.	APVD.	SCALE	1 : 5

NAME	MTHⅢ-T1 TERMINAL BOARD UNIT OUTLINE	
CODE NO.	931	DWG. NO. F3075636

Nabtesco Corporation

AC

削り加工	呼ビ寸法区分	許容差	30ヲコエ120以下	±0.3	表面アラサ			▽▽▽	6.3S	(1.6a)
	0.5以上 6以下	±0.1	120ヲコエ315以下	±0.5	記号	Rmax	(Ra)	▽▽	25S	(6.3a)
	6ヲコエ 30以下	±0.2	315ヲコエ1000以下	±0.8	▽▽▽▽	0.8S	(0.2a)	▽	100S	(25a)

ITEM−1*	J 1 : JUMPER NEEDLESS (AC170~264V)
ITEM−0*	J 1 : JUMPER NEEDFUL (AC85~132V)

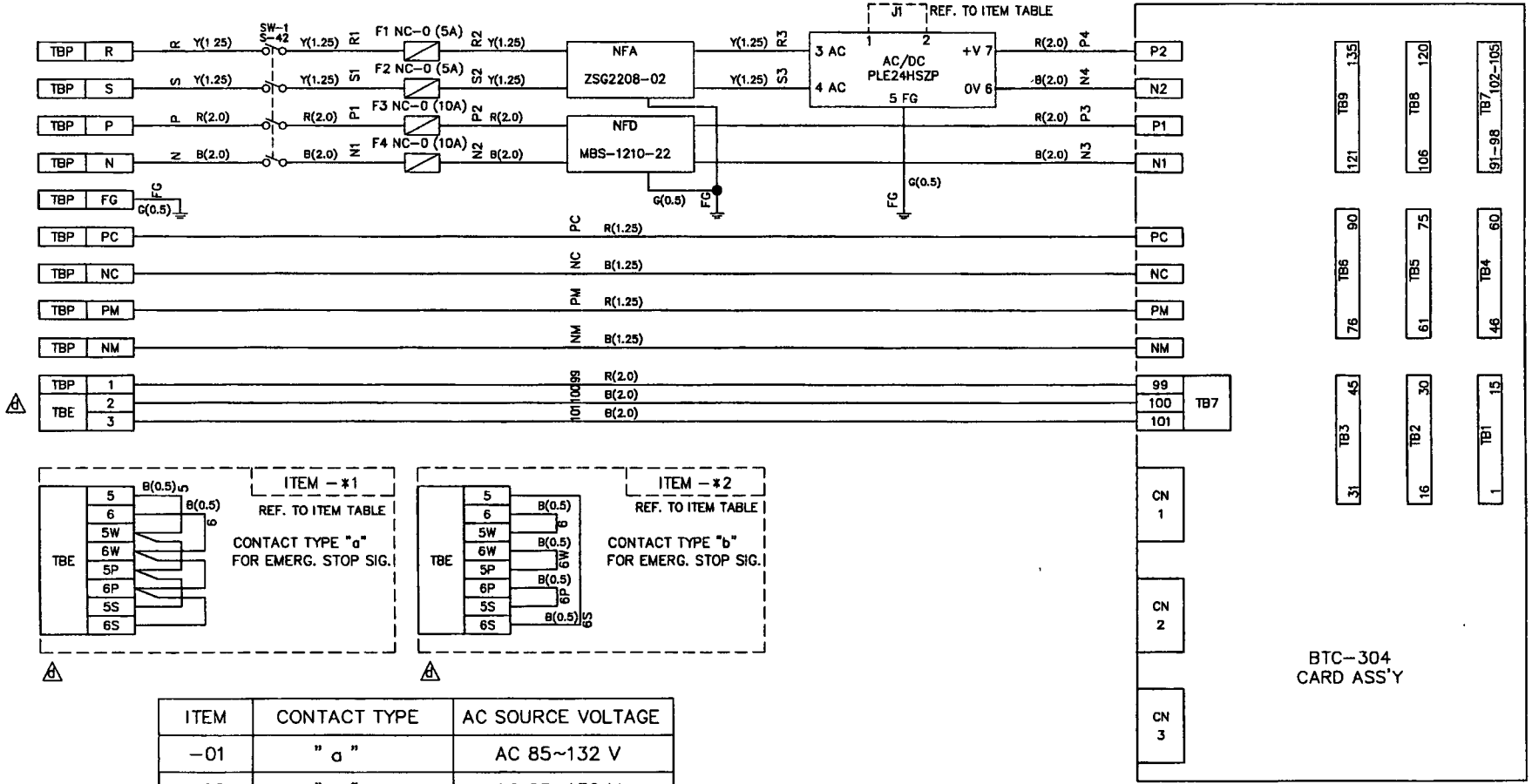

ITEM	CONTACT TYPE	AC SOURCE VOLTAGE
−01	" a "	AC 85~132 V
−02	" b "	AC 85~132 V
−11	" a "	AC 170~264 V
→ −12	" b "	AC 170~264 V

(For Bow & Stern)

								b	F3075636 ニ訂正	c	'04 4.9	石川	小林	東	松本	MATERIAL
e	73075636ニ 訂正	B	'04 11.18	Y Y	石川	東	馬鉢	a	B3075636 ニ訂正	c	'04 3/2	Y Y	小林	東	松本	WEIGHT
d x3	セZH: 配線追加	c	'04 6.9	石川	—	東	馬鉢	—	MTHIII TYPE	−	'03 10/10	小林	−	東	松本	RELATION NO. 73075636 F3075636 ~~B3075636~~
C	B3075636 ヲ抹消	c	'04 4.28	Y Y	小林	Y M	松本	REV. MARK	NOTE		DATE	DESIGNED		CHK.	APVD	SCALE

NAME: MTHIII−T1 TERMINAL BOARD UNIT

WIRING DIAGRAM

CODE NO. 931

DWG NO W3075636

Nabtesco Corporation

AC

削り加工	呼ビ寸法区分	許容差	30ヲコエ120以下	±0.3	表面アラサ			▽▽▽	6.3S	(1.6a)
	0.5以上 6以下	±0.1	120ヲコエ315以下	±0.5	仕上記号	Rmax	(Ra)	▽▽	25S	(6.3a)
	6ヲコエ 30以下	±0.2	315ヲコエ1000以下	±0.8	▽▽▽▽	0.8S	(0.2a)	▽	100S	(25a)

TOP BOARD COLOR : BLACK (MUNSELL : N2.0)
SURFACE TREATMENT: ZINC PLATING
(CHROMATE TREATMENT)
ENCLOSURE : IP56

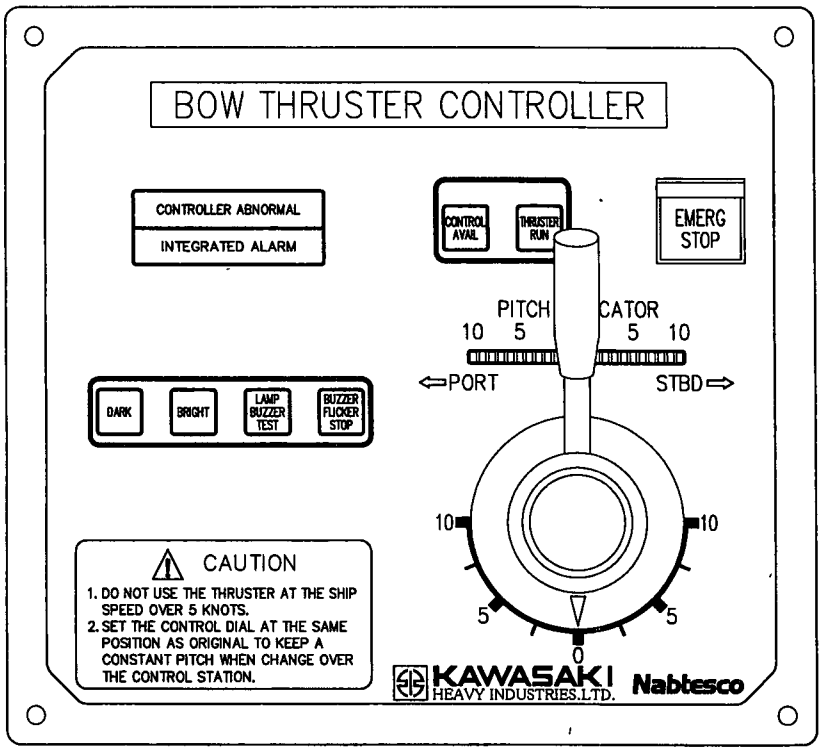

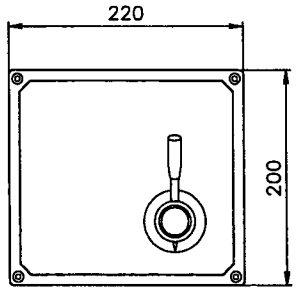

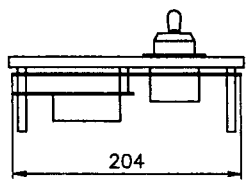

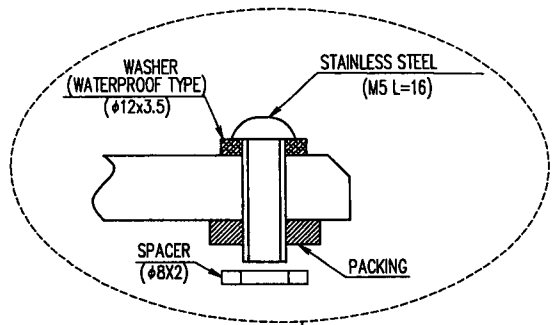

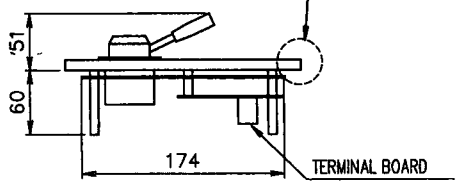

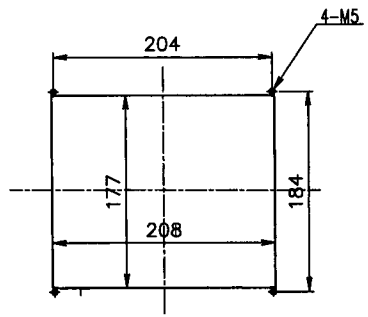

REV. MARK	NOTE		DATE	DESIGNED	CHK.	APVD.
—	M:73076543	-	'05 3/10	石川	—	

MATERIAL

WEIGHT ABOUT 2Kg

RELATION NO. 74DS40907-02 74DS40930-01

SCALE 1×0.7 (1×0.2)

NAME: BOW THRUSTER CONTROLLER (WATER PROOF)

CODE NO. 123

DWG. NO. 73079047

Nabtesco Corporation

削り加工	呼び寸法区分	許容差	30ヲコエ120以下	±0.3	表面アラサ			▽▽▽	6.3S	(1.6a)
	0.5以上 6以下	±0.1	120ヲコエ315以下	±0.5	仕上記号	Rmax	(Ra)	▽▽	25S	(6.3a)
	6ヲコエ 30以下	±0.2	315ヲコエ1000以下	±0.8	▽▽▽▽	0.8S	(0.2a)	▽	100S	(25a)

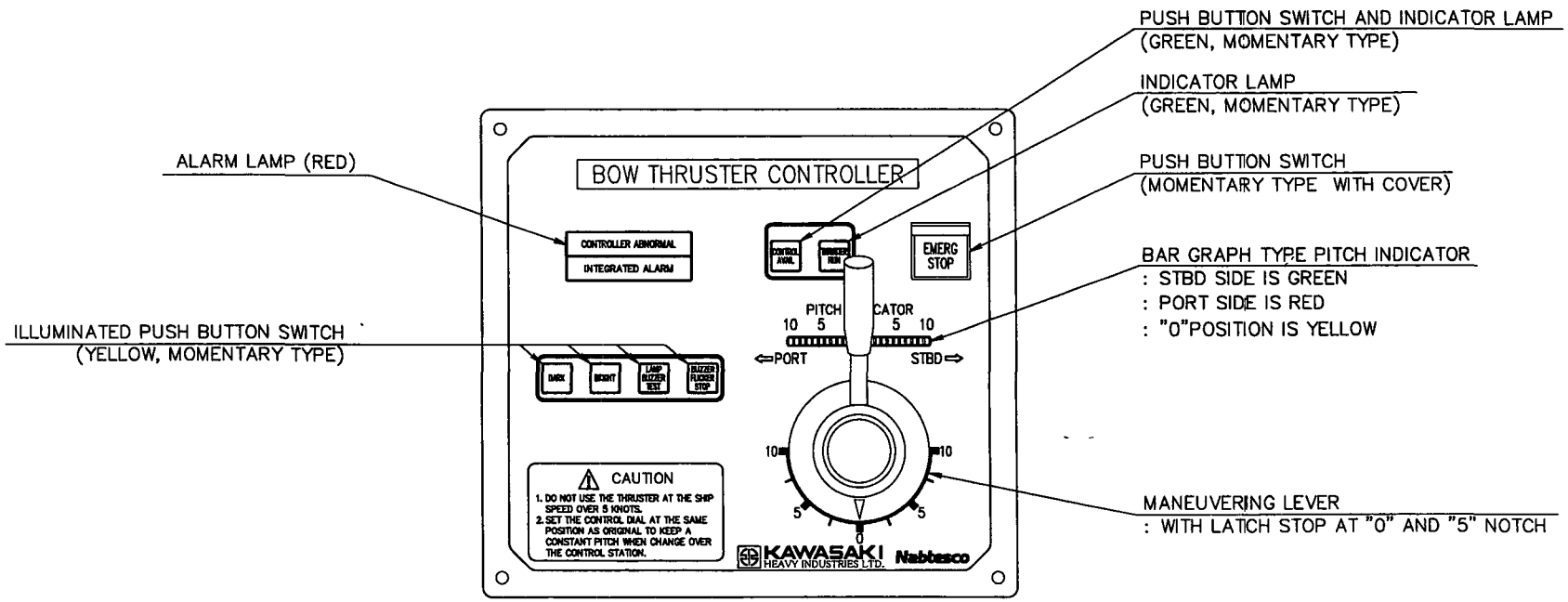

REV. MARK	NOTE	DATE	DESIGNED	CHK.	APVD.
—	-	'05 3/10	石川	永	鳥飼

MATERIAL
WEIGHT
RELATION NO. —
SCALE —

NAME
BOW THRUSTER CONTROLLER
(PANEL ARRANGEMENT)

CODE NO. 123
DWG. NO. F3079047

Nabtesco Corporation AC

削り加工	呼ビ寸法区分	許容差	30ヲコエ120以下	±0.3	表面アラサ			▽▽▽	6 3S	(1.6a)
	0.5以上 6以下	±0.1	120ヲコエ315以下	±0.5	仕上記号	Rmax	(Ra)	▽▽	25S	(6.3a)
	6ヲコエ 30以下	±0.2	315ヲコエ1000以下	±0.8	▽▽▽▽	0.8S	(0.2a)	▽	100S	(25a)

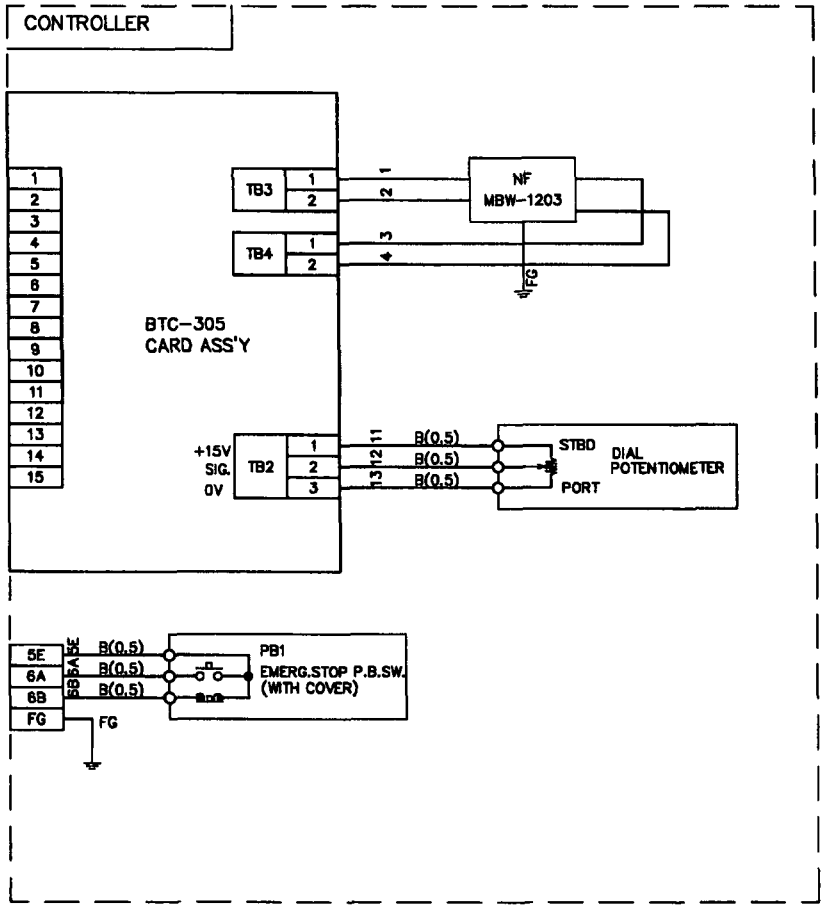

REV. MARK	NOTE		DATE	DESIGNED		CHK.	APVD.
b	㋐ZH:	B	'04 9.23	石川	—	[illegible]	[illegible]
a	㋐ZH: B3074618-11ニ訂正	c	'04 6.18	石川	—	東	馬鉢
—	M: 73075638 MTHⅢ TYPE		'04 4/28	Y Y	小林	YM	松本

MATERIAL

WEIGHT

RELATION NO. 73074618-11 F3074618-11 B3074618-11

SCALE

NAME: MTH Ⅲ－W1 THRUSTER CONTROLLER

WIRING DIAGRAM

CODE NO. 123

DWG. NO. W3074618-11

Nabtesco Corporation

AC

削り加工	呼び寸法区分	許容差	30ヲコエ120以下	±0.3	表面アラサ			▽▽▽	6.3S	(1 6a)
	0.5以上 6以下	±0.1	120ヲコエ315以下	±0.5	仕上記号	Rmax	(Ra)	▽▽	25S	(6.3a)
	6ヲコエ 30以下	±0.2	315ヲコエ1000以下	±0.8	▽▽▽▽	0.8S	(0.2a)	▽	100S	(25a)

TOP BOARD COLOR : BLACK (MUNSELL : N2.0)
SURFACE TREATMENT: ZINC PLATING
(CHROMATE TREATMENT)
ENCLOSURE : IP56

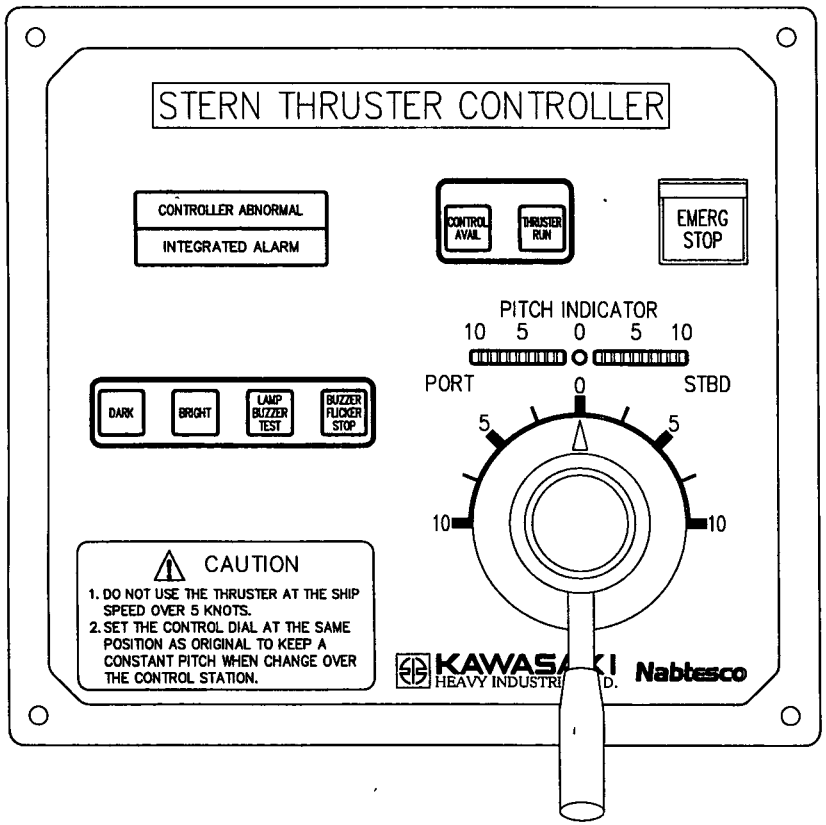

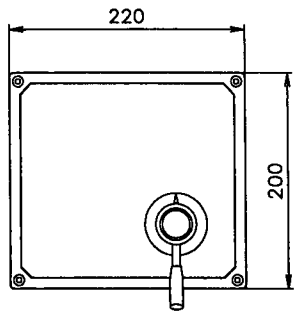

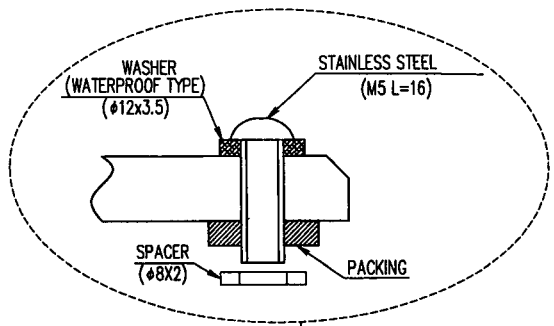

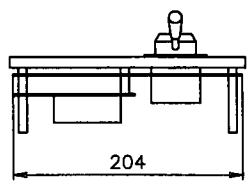

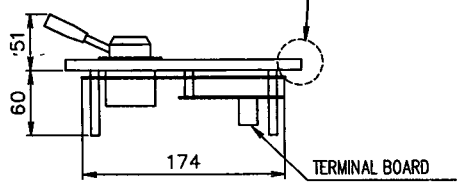

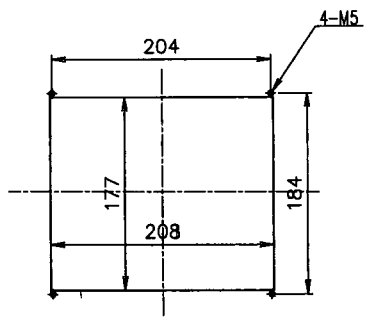

REV. MARK	NOTE		DATE	DESIGNED	CHK.	APVD
—	M: 73075907	-	'05 3/10	石川	—	東

MATERIAL
WEIGHT ABOUT 2Kg
RELATION NO. 74DS40907-02 74DS40930-01
SCALE 1×0.7 (1×0.2)

NAME
STERN THRUSTER CONTROLLER
(WATER PROOF)

CODE NO. 123
DWG. NO. 73079048

Nabtesco Corporation
AC

削り加工	呼ビ寸法区分	許容差	30ヲコエ120以下	±0.3	表面アラサ			▽▽▽	6.3S	(1.6a)
	0.5以上 6以下	±0.1	120ヲコエ315以下	±0.5	位[illegible]記号	Rmax	(Ra)	▽▽	25S	(6.3a)
	6ヲコエ 30以下	±0.2	315ヲコエ1000以下	±0.8	▽▽▽▽	0.8S	(0.2a)	▽	100S	(25a)

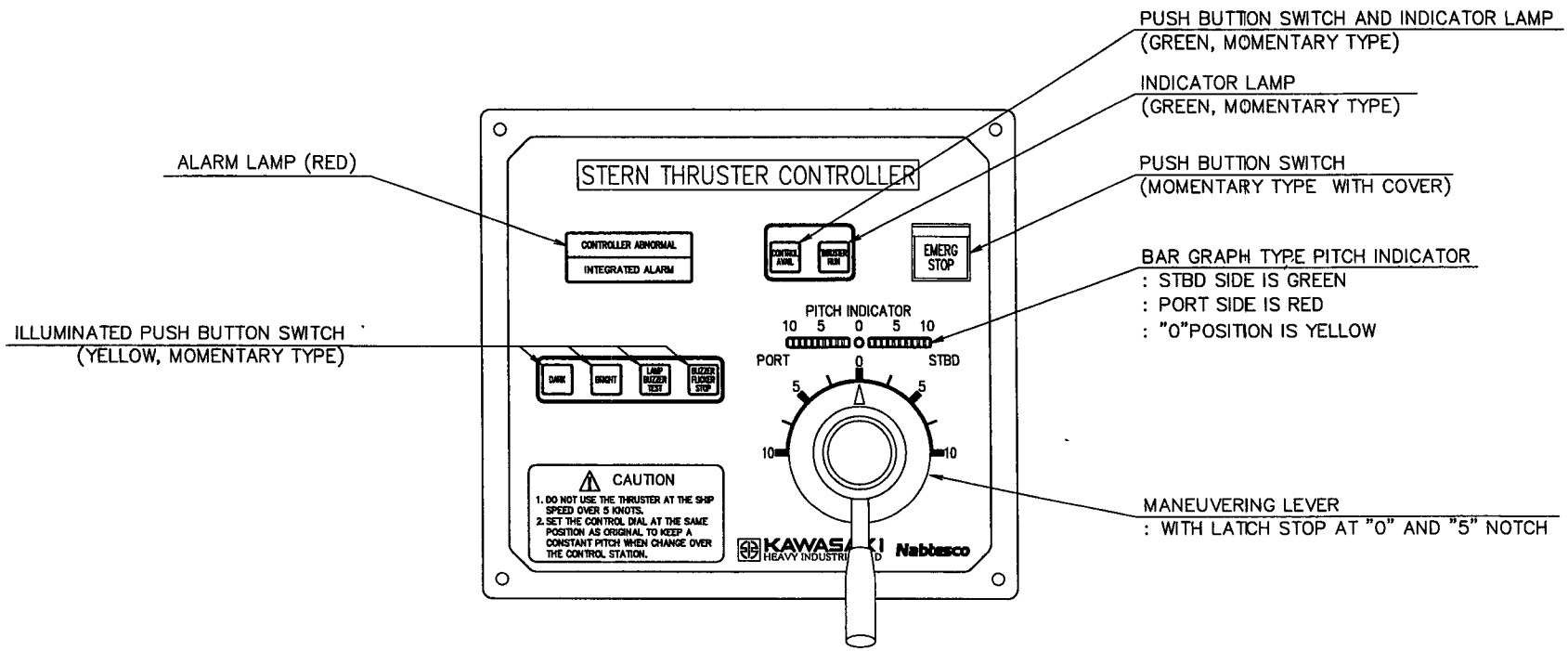

REV MARK	NOTE		DATE	DESIGNED	CHK.	APVD.
—		-	'05 3/10	石川	—	[illegible]

MATERIAL
WEIGHT
RELATION NO.
SCALE -

NAME
STERN THRUSTER CONTROLLER
(PANEL ARRANGEMENT)

CODE NO. 123
DWG. NO. F3079048

Nabtesco Corporation

削り加工	呼ビ寸法区分	許容差	30ヲコエ120以下	±0.3	表面アラサ			▽▽▽	6 3S	(1 6a)
	0.5以上 6以下	±0 1	120ヲコエ315以下	±0.5	仕[illegible]号	Rmax	(Ra)	▽▽	25S	(6.3a)
	6ヲコエ 30以下	±0.2	315ヲコエ1000以下	±0.8	▽▽▽▽	0.8S	(0.2a)	▽	100S	(25a)

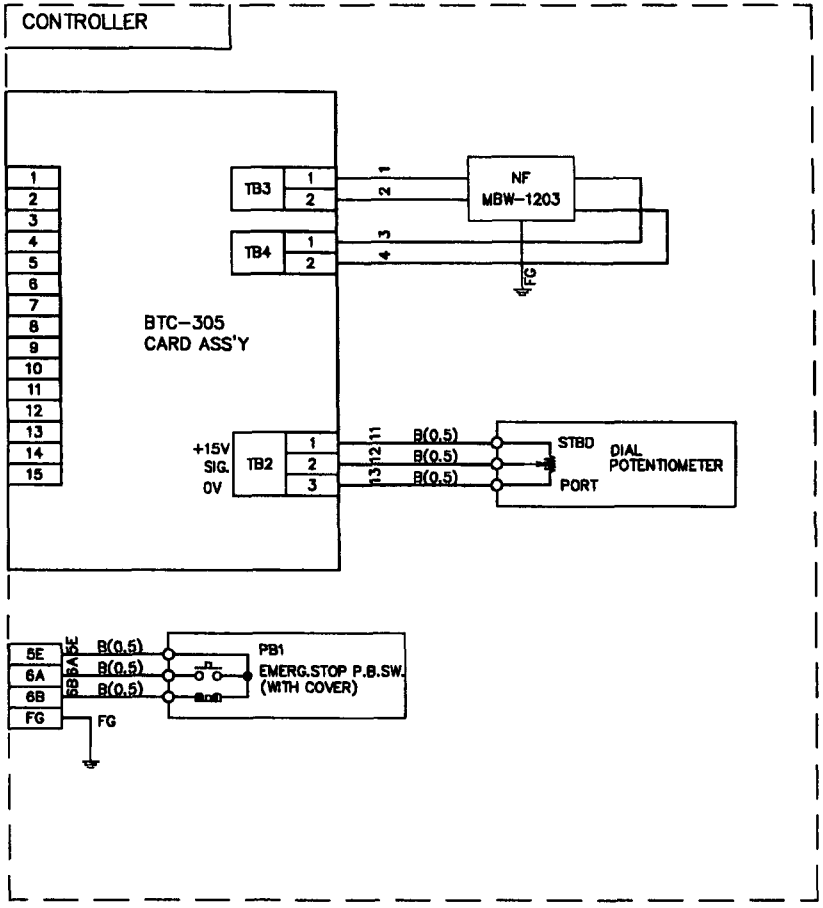

REV. MARK	NOTE		DATE	DESIGNED		CHK.	APVD.
b	ｾZH:	B	'04 9.23	石川	—	[illegible]	[illegible]
a	ｾZH: B3074618-11ニ 訂正	c	'04 6.18	石川	—	東	馬躰
—	M: 73075638 MTHⅢ TYPE		'04 4/28	YY	小林	YM	松本

MATERIAL

WEIGHT

RELATION NO. 73074618-11 F3074618-11 B3074618-11

SCALE

NAME: MTH Ⅲ－W1 THRUSTER CONTROLLER

WIRING DIAGRAM

CODE NO. 123

DWG. NO. W3074618-11

Nabtesco Corporation

AC

寸法		仕上記号	Rmax	(Ra)		25S	(6.3a)
0.5以上 6以下	±0.1	▽▽	0.8S	(0.2a)	▽	100S	(25a)
6ヲコエ 30以下	±0.2						
120ヲコエ 315以下	±0.5						
315ヲコエ 1000以下	±0.8						

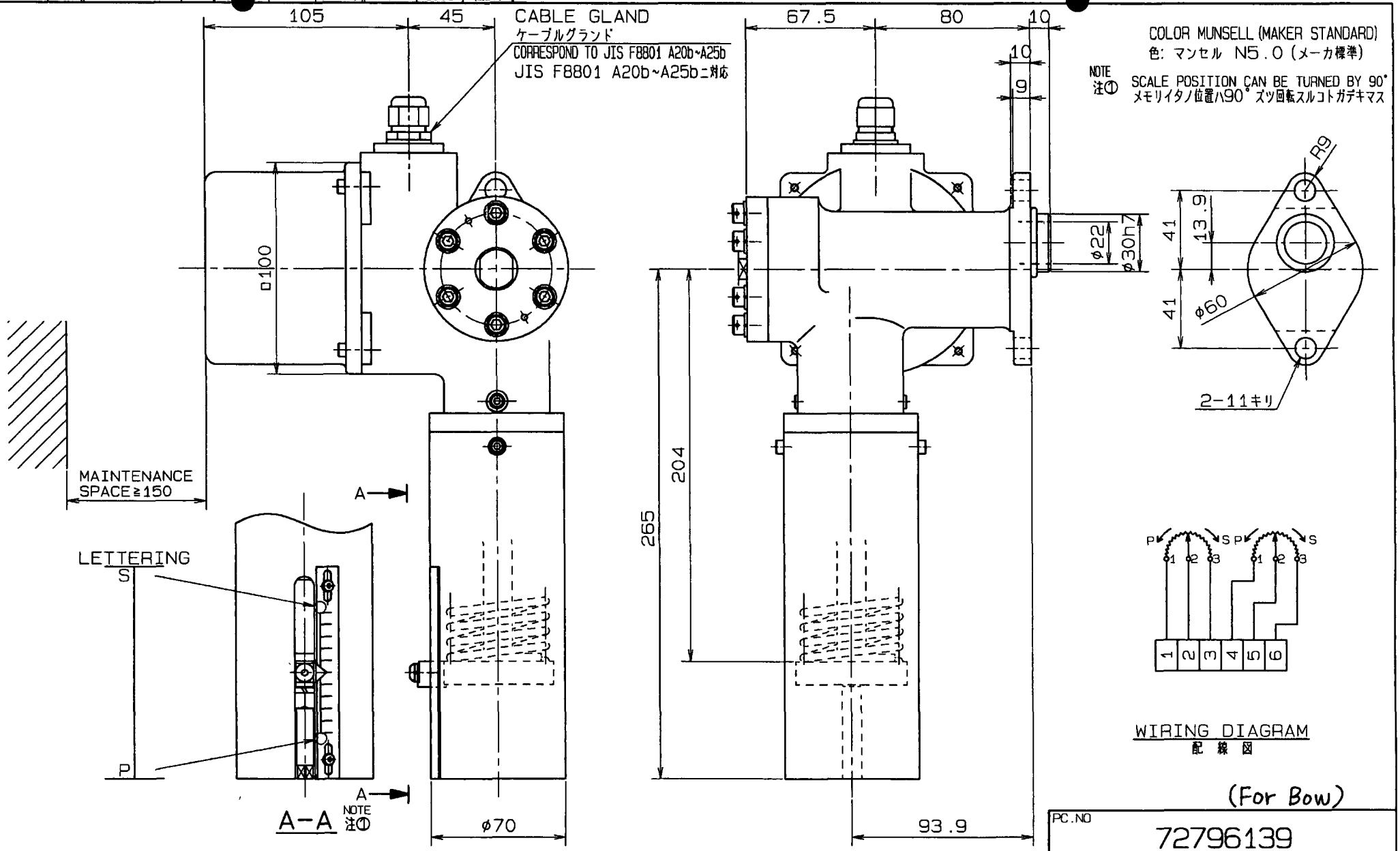

WIRING DIAGRAM
配線図

(For Bow)

REV.	NOTE		DATE	DESIGNED		CHK.	APVD.
b	ポテンショ回転方向明記スル	B	2004 12/8	TJ	KT	田中	土井
a	注① 追記スル	B	2001 06/13	S S	田中	古市	土井
—		—	1999 09/09	S S	—	古市	吉川

MATERIAL —
WEIGHT 9.7kg
RELATION NO. 組立図: 72796139 部品表: B2796139
SCALE 1:2

PC.NO 72796139
NAME KCF-52 BLADE ANGLE TRANSMITTER 翼角発信器
OUT LINE 外形図
CODE NO. 726
DWG.NO. F3796139 (P)

呼ビ寸法区分	許容差	30ヲコエ 120以下	±0.3	表面アラサ			▽▽▽	6.3S	(1.6a)
0.5以上 6以下	±0.1	120ヲコエ 315以下	±0.5	仕上記号	Rmax	(Ra)	▽▽	25S	(6.3a)
6ヲコエ 30以下	±0.2	315ヲコエ 1000以下	±0.8	▽▽▽▽	0.8S	(0.2	▽	100S	(25a)

注記 ・図号55，25，18ノボルトハ針金ニテユルミ止メスルコト。
ポテンショノ調整要領ハST42164ニヨル。

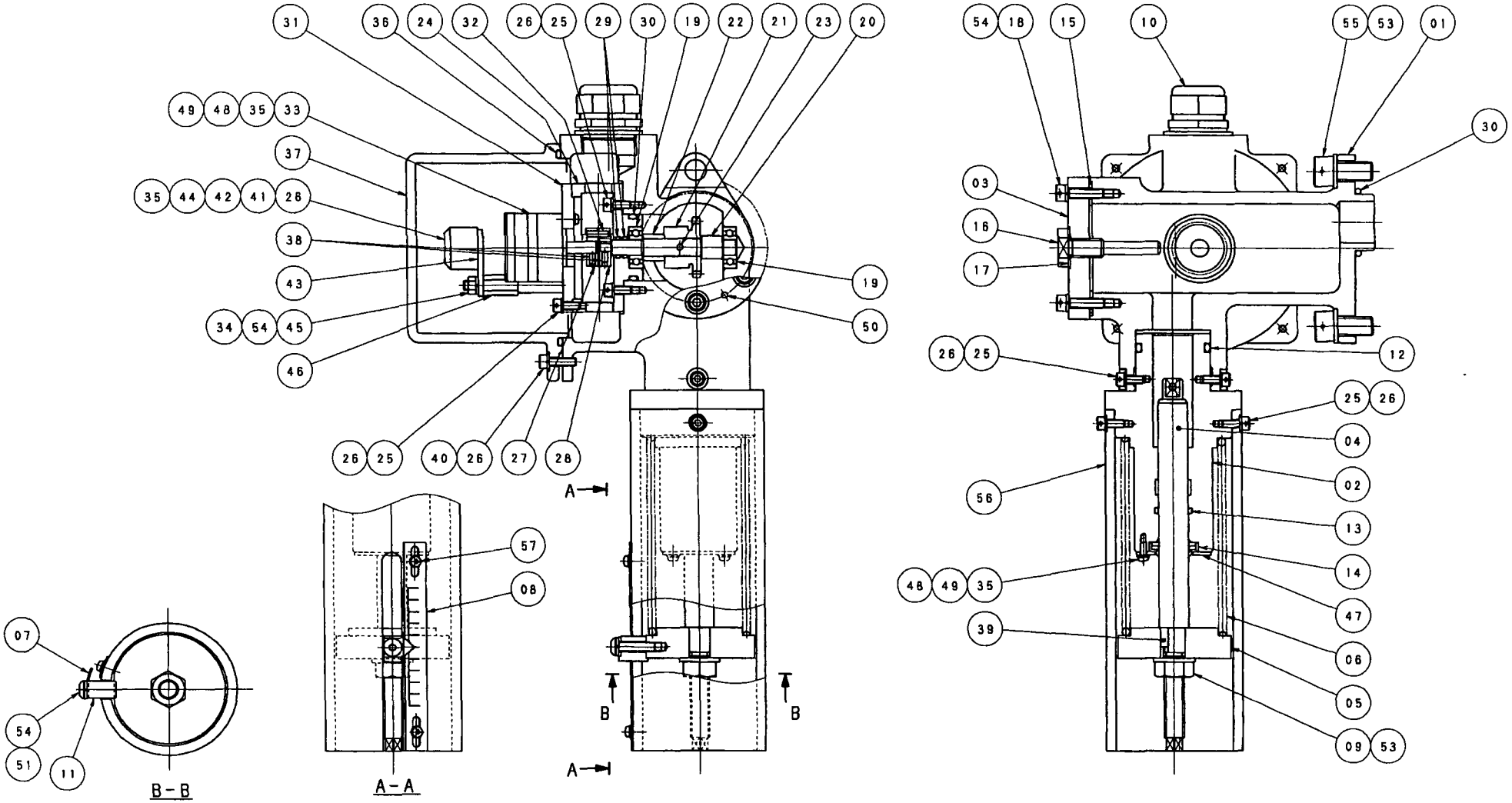

								d	部品表変更スル	B	2002 06/06	S S	－	古市	土井	MATERIAL －	NAME KCF-52 BLADE ANGLE TRANSMITTER 翼角発信器
g	部品表変更ニヨル	－	2003 10/01	S S	田中	土井	土井	c	全図見直シスル (SSSR1図ニ合ワス)	C	2001 08/20	S S	－	古市	土井	WEIGHT －	
f	74ZH42216-01 (部品表変更スル)	C	2002 08/22	S S	－	古市	土井	－		－	1999 09/09	S S	－	古市	吉川	RELATION NO. 外形図:F3796139 部品図:B2796139	CODE NO. 726
e	日産自動車付属ネジ変更スル (図号57消去スル)	C	2002 07/03	S S	－	古市	土井	REV. MARK	NOTE		DATE	DESIGNED	CHK.	APVD.		SCALE 1:1.5	DWG. NO. 72796139

NABCO Ltd.

削リ加工	呼ビ寸法区分	許容差			表面アラサ					
	0.5以上 6以下	±0.1	120ヲコエ 315以下	±0.5	仕上記号	Rmax	(Ra)	▽▽	25S	(6.3a)
	6ヲコエ 30以下	±0.2	315ヲコエ 1000以下	±0.8	▽▽▽▽	0.8S	(0.2a)	▽	100S	(25a)
			30ヲコエ 120以下	±0.3				▽▽▽	6.3S	(1.6a)

REF NO. 照号	CODE NO. コード	PC. NO. 品番	DESCRIPTION 品名	Q'TY 個数	REMARKS 記事
1			BODY ホンタイ	1	
2			GUIDE ガイド	1	
3			PLATE イタ	1	
4			SHAFT シャフト	1	
5			FLANGE バネウケ	1	
6			SPRING バネ	1	
7			POINTER シシン	1	
8	983	REFER TO ITEM TABLE 種別表参照	GRADUATION メモリイタ	1	
9			HEX. NUT 6カクナット	1	1種 M10
10			GLAND ケーブルグランド	1	SVRE21
11			POINTER BRACKET シシンブラケット	1	
12		0401-1000300-00	O RING Oリング	1	G30
13		0401-1000150-00	O RING Oリング	1	P15
14		6255-3116332-04	DUST WIPER ダストワイパ	1	DKH152557
15			GASKET ガスケット	1	
16			BOLT ボルト	1	
17	952	73594587-15	DAITHREAD ダイスレッド	1	DT-1-10
18			HEX. SOCKET HEAD BOLT 6カクアナツキボルト	6	M5x20
19			BEARING ベアリング	2	NTN608
20			SHAFT シャフト	1	
21			SPROCKET スプロケット	1	TSUBAKIMOTO RS35
22			SPACER スペーサ	1	
23			TAPER PIN テーパーピン	1	3x24
24			BRACKET ブラケット	1	
25			BOLT ボルト	11	M4x10
26			SPRING WASHER バネザガネ	17	M4
27			JOINT (A) ツギテ (A)	1	
28			JOINT (B) ツギテ (B)	1	
29		0401-2000080-00	O RING Oリング	2	P8
30		0401-1000320-00	O RING Oリング	2	P32
31			FLANGE トリツケイタ	1	
32			PIN ピン	1	
33			POTENTIO METER ポテンショメータ	1	2WD035-04 2kΩ 2連
34			WASHER ザガネ	2	M5
35			SPRING WASHER バネザガネ	8	M3
36		0401-2000950-00	O RING Oリング	1	G95
37			COVER フタ	1	
38		0051-3103006-51	SET SCREW 6カクアナツキトメネジ	2	M3x6
39			KEY ヘイコウキー	1	4x4x10
40			HEX. SOCKET HEAD BOLT 6カクアナツキボルト	4	M4x15

REF NO. 照号	CODE NO. コード	PC. NO. 品番	DESCRIPTION 品名	Q'TY 個数	REMARKS 記事
41			MACHINE SCREW ジュウジアナツキナベコネジ	2	M3x10
42			TERMINAL BOARD タンシダイ	1	
43			BRACKET ブラケット	1	
44			WASHER ザガネ	2	M3
45			HEX. NUT 6カクナット	2	1種 M5
46			BOLT ボルト	2	
47			COVER オサエイタ	1	
48			MACHINE SCREW ジュウジアナツキナベコネジ	6	M3x10
49			WASHER ザガネ	6	M3
50			SPRING PIN スプリングピン	2	3x20
51			HEX. SOCKET MACHING SCREW 6カクアナツキナベコネジ	1	M5x26
52					
53			WASHER ザガネ	3	M10
54			SPRING WASHER バネザガネ	9	M5
55			BOLT ボルト	2	M10x20
56			COVER カバー	1	
57		0032-1503006-64	CROSS RECESSED HEAD SCREWS WITH CAPTIVE WASHER ザガネ組込ミジュウジアナツキナベコネジ	2	M3x6

ITEM 種別	PC. NO. of REF. NO. 8 照号8ノ品番		REMARKS 記事
68	73753548-44	KT-25581	
67	73753548-42	KT-21982	
66	73753548-40	KT-1578 KT-18781	
65	73753548-38	KT-1578 KT-18781	
64	73753548-36	KT-1058 KT-13081	
63	73753548-34	KT-7281 KT-6881	
62	73753548-32	KT-438 KT-5581	
61	73753548-26	KT-13081 (スケッフラッグ用)	
60	73753548-25	KT-25581	
59	73753548-24	KT-21982	
58	73753548-22	KT-13081 KT-15781	
57	73753548-11	KT-328 KT-4381	
56	73753548-10	KT-328 KT-4381	
55	73753548-16	KT-7281 KT-6881	
54	73753548-06	KT-1058 KT-13081	
53	73753548-18	KT-888 KT-10581	
52	73753548-09	KT-1308 KT-15781	
51	73753548-23	KT-438 KT-5581	

ITEM 種別	PC NO. of REF. NO 8 照号8ノ品番		REMARKS 記事
22	73753548-45	KT-30081 KT-30083	2003/11/10 SS, 田中, 土井
21	73753548-43	KT-25581	
20	73753548-41	KT-21982	
19	73753548-39	KT-1578 KT-18781	
18	73753548-37	KT-1308 KT-15781	
17	73753548-35	KT-1058 KT-13081	
16	73753548-33	KT-7281 KT-6881	
15	73753548-31	KT-43 KT-5581	
14	73753548-21	KT-328 KT-4381	
13	73753548-30	KT-1058 KT-13081	
12	73753548-29	KT-18781 KT-1578	
11	73753548-28	KT-25581	
10	73753548-27	KT-888 KT-10581	
09	73753548-26	KT-888 KT-10581	
08	73753548-14		
07	73753548-19	KT-21982	
06	73753548-13	KT-328 KT-4381	
05	73753548-15	KT-7281 KT-6881	
03	73753548-17	KT-888 KT-10581	
→ 02	73753548-12	KT-1308 KT-15781	
01	73753548-08	KT-438 KT-5581	

REV. MARK	NOTE		DATE	DESIGNED		CHK.	APVD.
g	支給品Oリング品番追記	C	2003/10/01	SS	田中	土井	土井
f	742842216-01ニヨリ 照号57M3x8→M3x6ニ変更	C	2002/08/22	SS	-	古市	土井
e	照号57追加及ビ照号35,48,49個数変更	C	2002/07/02	SS	-	古市	土井
d	OリングサイズヲSSSR1適合ニ変更スル	B	2002/06/06	SS	-	古市	土井
c	全面見直シスル (SSSR1個ニ合ワス)	C	2001/08/20	SS	-	古市	土井
-		-	1999/09/09	SS	-	古市	吉川

MATERIAL: -
WEIGHT: -
RELATION NO. 組立図:72796139 外観図:F3796139
SCALE: -

NAME: KCF-52 BLADE ANGLE TRANSMITTER 翼角発信器

PARTS LIST 部品表

CODE NO: 726
DWG. NO: B2796139

NABCO Ltd.

加工											
0.5以上 6以下	±0.1	120ﾗｳｴ 315以下	±0.5	仕上記号	Rmax	(Ra)	▽▽	25S	(6.3a)
6ﾗｳｴ 30以下	±0.2	315ﾗｳｴ 1000以下	±0.8	▽▽▽	0.8S	(0.2a)	▽	100S	(25a)

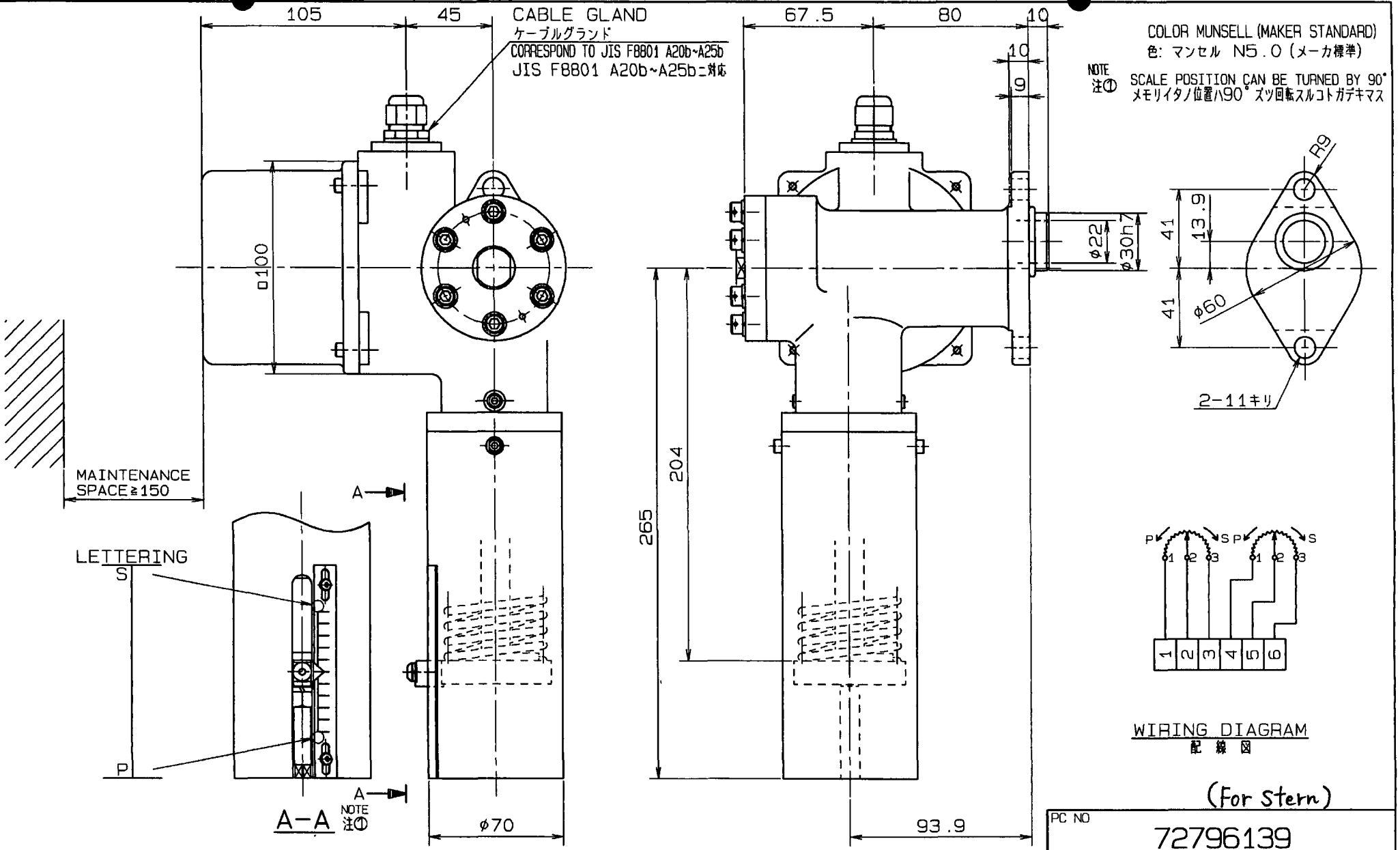

WIRING DIAGRAM
配線図

(For Stern)

REV.	NOTE		DATE	DESIGNED		CHK.	APVD.
b	ポテンショ回転方向明記スル	B	2004 12/8	TJ	KT	田中	土井
a	注① 追記スル	B	2001 06/13	S S	田中	古市	土井
–		–	1999 09/09	S S	–	古市	吉川

MATERIAL –
WEIGHT 9.7kg
RELATION NO.
組立図: 72796139
部品表: B2796139
SCALE 1:2

PC NO 72796139

NAME KCF-52 BLADE ANGLE TRANSMITTER
翼角発信器

OUT LINE
外形図

CODE NO. 726

DWG.NO F3796139 (P)

Nishinan Corporation

一般寸法区分	許容差	30ヲコエ 120以下	±0.3	表面アラサ			▽▽▽	6.3S	(1.6a)
0.5以上 6以下	±0.1	120ヲコエ 315以下	±0.5	仕上記号	Rmax	(Ra)	▽▽	25S	(6.3a)
6ヲコエ 30以下	±0.2	315ヲコエ 1000以下	±0.8	▽▽▽▽	0.8S	(0.[illegible]	▽	100S	(25a)

注記 ・番号55，25，18ノボルトハ針金ニテユルミ止メスルコト。
・ポテンショノ調整要領ハST42164ニヨル。

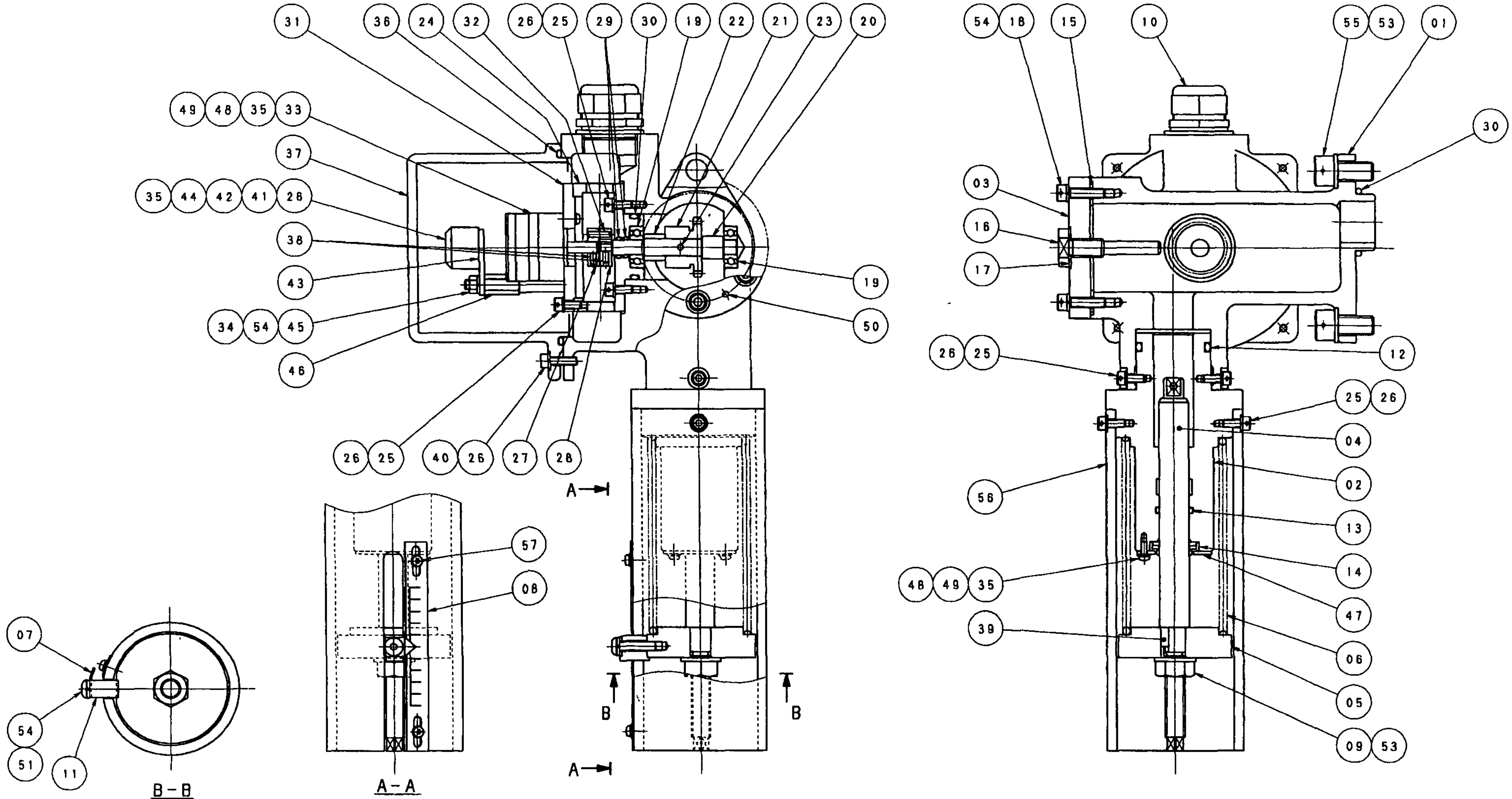

								d	部品表変更スル	B	2002 06/06	S S	－	古市	土井	MATERIAL －
g	部品表変更ニヨル	－	2003 10/01	S S	田中	土井	土井	c	全面見直シスル (SSSR1回ニ合ワス)	C	2001 08/20	S S	－	古市	土井	WEIGHT －
f	74ZH42216-01 (部品表変更スル)	C	2002 08/22	S S	－	古市	土井	－		－	1999 09/09	S S	－	古市	吉川	RELATION NO. 外形図:F3796139 部品表:B2796139
e	目盛板取付用ネジ変更スル (番号57追加スル)	C	2002 07/03	S S	－	古市	土井	REV. MARK	NOTE		DATE	DESIGNED	CHK.	APVD.	SCALE 1:1.5

NAME KCF-52 BLADE ANGLE TRANSMITTER 翼角発信器

CODE NO. 726

DWG NO 72796139

NABCO Ltd.

呼び寸法区分	許容差			表面アラサ					
0 5以上 6以下	±0 1	120ヲコエ 315以下	±0 5	仕上記号	Rmax	(Ra)	▽▽	25S	(6 3a)
6ヲコエ 30以下	±0 2	315ヲコエ 1000以下	±0 8	▽▽▽▽	0 8S	(0 2a)		100S	(25a)
		30ヲコエ 120以下	±0 3				▽▽▽	6 3S	(1 6a)

REF NO. 照号	CORD NO. コード	PC NO 品番	DESCRIPTION 品名	Q'TY 個数	REMARKS 記事
1			BODY ホンタイ	1	
2			GUIDE ガイド	1	
3			PLATE イタ	1	
4			SHAFT シャフト	1	
5			FLANGE バネウケ	1	
6			SPRING バネ	1	
7			POINTER シシン	1	
8	983	REFER TO ITEM TABLE 種別表参照	GRADUATION メモリイタ	1	
9			HEX NUT 6カクナット	1	1種 M10
10			GLAND ケーブルグランド	1	SVRE21
11			POINTER BRACKET シシンブラケット	1	
12		0401-1000300-00	O RING Oリング	1	G30
13		0401-1000150-00	O RING Oリング	1	P15
14		6255-3116332-04	DUST WIPER ダストワイパ	1	DKH152557
15			GASKET ガスケット	1	
16			BOLT ボルト	1	
17	952	73594587-15	DAITHREAD ダイスレット	1	DT-1-10
18			HEX SOCKET HEAD BOLT 6カクアナツキボルト	6	M5x20
19			BEARING ベアリング	2	NTN608
20			SHAFT シャフト	1	
21			SPROCKET スプロケット	1	TSUBAKIMOTO RS35
22			SPACER スペーサ	1	
23			TAPER PIN テーパーピン	1	3x24
24			BRACKET ブラケット	1	
25			BOLT ボルト	11	M4x10
26			SPRING WASHER バネザガネ	17	M4
27			JOINT (A) ツギテ (A)	1	
28			JOINT (B) ツギテ (B)	1	
29		0401-2000080-00	O RING Oリング	2	P8
30		0401-1000320-00	O RING Oリング	2	P32
31			FLANGE トリツケイタ	1	
32			PIN ピン	1	
33			POTENTIO METER ポテンショメータ	1	2WDD35-D4 2kΩ 2連
34			WASHER ザガネ	2	M5
35			SPRING WASHER バネザガネ	8	M3
36		0401-2000950-00	O RING Oリング	1	G95
37			COVER フタ	1	
38		0051-3103006-51	SET SCREW 6カクアナツキトメネジ	2	M3x6
39			KEY ヘイコウキー	1	4x4x10
40			HEX SOCKET HEAD BOLT 6カクアナツキボルト	4	M4x15
41			MACHINE SCREW ジュウジアナツキナベコネジ	2	M3x10
42			TERMINAL BOARD タンシダイ	1	
43			BRACKET ブラケット	1	
44			WASHER ザガネ	2	M3
45			HEX NUT 6カクナット	2	1種 M5
46			BOLT ボルト	2	
47			COVER オサエイタ	1	
48			MACHINE SCREW ジュウジアナツキナベコネジ	6	M3x10
49			WASHER ザガネ	6	M3
50			SPRING PIN スプリングピン	2	3x20
51			HEX SOCKET MACHING SCREW 6カクアナツキナベコネジ	1	M5x26
52					
53			WASHER ザガネ	3	M10
54			SPRING WASHER バネザガネ	9	M5
55			BOLT ボルト	2	M10x20
56			COVER カバー	1	
57		0032-1503006-64	CROSS RECESSED HEAD SCREWS WITH CAPTIVE WASHER ザガネ組込ミジュウジアナツキナベコネジ	2	M3x6

ITEM 種別	PC NO of REF NO 8 照号8ノ品番		REMARKS 記事
22	73753548-45	KT-30081 KT-30083	2003/11/10 SS, 田中, 土井
21	73753548-43	KT-25581	
20	73753548-41	KT-21982	
19	73753548-39	KT-1578 KT-18781	
18	73753548-37	KT-1308 KT-15781	
17	73753548-35	KT-1058 KT-13081	
16	73753548-33	KT-7281 KT-6881	
15	73753548-31	KT-43 KT-5581	
14	73753548-21	KT-328 KT-4381	
13	73753548-30	KT-1058 KT-13081	
12	73753548-29	KT-18781 KT-1578	
11	73753548-28	KT-25581	
10	73753548-27	KT-888 KT-10581	
09	73753548-26	KT-888 KT-10581	
08	73753548-14		
07	73753548-19	KT-21982	
06	73753548-13	KT-328 KT-4381	
05	73753548-15	KT-7281 KT 6881	
→ 03	73753548-17	KT-888 KT-10581	
02	73753548-12	KT-1308 KT-15781	
01	73753548-08	KT-438 KT 5581	

ITEM 種別	PC NO of REF NO 8 照号8ノ品番		REMARKS 記事
68	73753548-44	KT-25581	
67	73753548-42	KT-21982	
66	73753548-40	KT-1578 KT 18781	
65	73753548-38	KT-1578 KT-18781	
64	73753548-36	KT-1058 KT-13081	
63	73753548-34	KT-7281 KT-6881	
62	73753548-32	KT-438 KT-5581	
61	73753548-26	KT-13081 (スケスラスタ用)	
60	73753548-25	KT-25581	
59	73753548-24	KT-21982	
58	73753548-22	KT-13081 KT-15781	
57	73753548-11	KT-328 KT-4381	
56	73753548-10	KT-328 KT-4381	
55	73753548-16	KT-7281 KT-6881	
54	73753548-06	KT-1058 KT-13081	
53	73753548-18	KT-888 KT-10581	
52	73753548-09	KT-1308 KT-15781	
51	73753548-23	KT-438 KT-5581	

REV MARK	NOTE		DATE	DESIGNED	CHK.	APVD.
g	支給品Oリング品番追記	C	2003 10/01	S S	田中	土井 / 土井
f	742842216-01_3リ 照号57M3x8→M3x6ニ変更	C	2002 08/22	S S	-	古市 / 土井
e	照号57追加ビ照号35 48, 49個数変更	C	2002 07/02	S S	-	古市 / 土井
d	Oリングサイズヲ SSSR1種二変更スル	B	2002 06/06	S S	-	古市 / 土井
c	全面見直シスル (SSSR1個二合ワス)	C	2001 08/20	S S	-	古市 / 土井
-		-	1999 09/09	S S	-	古市 / 吉川

MATERIAL -
WEIGHT -
RELATION NO 組立図 72796139 外形図 F3796139
SCALE -

NAME KCF-52 BLADE ANGLE TRANSMITTER 翼角発信器
PARTS LIST 部品表

CODE NO 726
DWG NO B2796139

NABCO Ltd.

削り加工	呼ビ寸法区分	許容差	30ヲコエ 120以下	±0.3	表面アラサ			▽▽▽	6.3S	(1.6a)
	0.5以上 6以下	±0.1	120ヲコエ 315以下	±0.5	仕上記号	Rmax	(Ra)	▽▽	25S	(6.3a)
	6ヲコエ 30以下	±0.2	315ヲコエ1000以下	±0.8	▽▽▽▽	0.8S	(0.2a)	▽	100S	(25a)

注記 －1 字体ハ丸ゴシック体トスル
－2 文字サイズハメーカ標準トスル
－3 文字色ハ黒色トシ印刷又ハ彫刻トスル

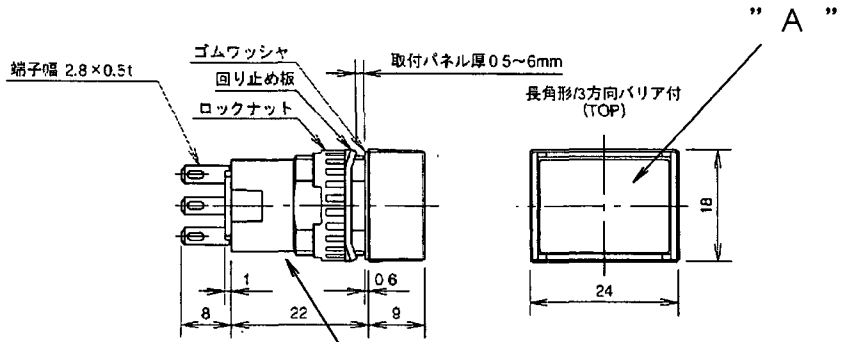

押釦スイッチ
AB6H-M1PR
(74757672-02)

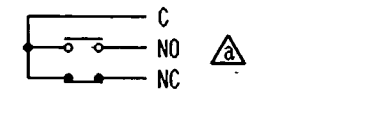

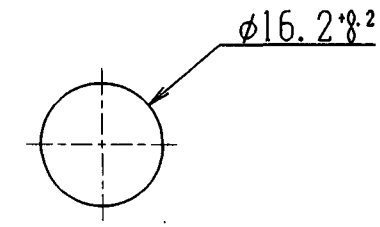

パネルカット
a

-01	EMERG STOP	
種別	文字 "A"	記事

MARK	NOTE		DATE	DESIGNED	CHK.	APVD.
a x2	セZH:回路及ビパネルカット追記	C	'04 10/26	石川	—	東	原
—	3次品スラスタ用	—	'03 12/18	林	—	東	松本

MATERIAL コウニュウヒン
WEIGHT
RELATION NO.
SCALE χ

NAME 押釦スイッチ
PUSH BUTTON SWITCH

CODE NO. 926
DWG. NO. 74759141

Nabtesco Corporation

FD

削り加工	呼ビ寸法区分	許容差			表面アラサ					
			30ヲコエ 120以下	±0.3				▽▽▽	6.3S	(1.6a)
	0.5以上 6以下	±0.1	120ヲコエ 315以下	±0.5	仕上記号	Rmax	(Ra)	▽▽	25S	(6.3a)
	6ヲコエ 30以下	±0.2	315ヲコエ1000以下	±0.8	▽▽▽▽	0.8S	(0.2a)	▽	100S	(25a)

種別	形式	仕様	記事
01	AI-KH6SP	180度開閉、長角形用、IP65	

メーカ ： 和泉電気

長角形用(AL-KH6SP)

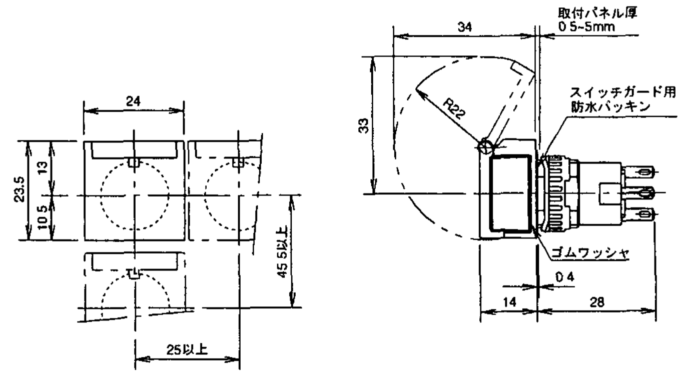

													MATERIAL コウニュウヒン	NAME スイッチガード A6シリーズ
													WEIGHT	
							—		-	2003 3.22	M I	-	石原	孫井	RELATION NO.
							REV. MARK	NOTE		DATE	DESIGNED	CHK.	APVD.	SCALE X

CODE NO. 926

DWG. NO. 74757673

FD

削り加工	呼ビ寸法区分	許容差	30ヲコエ120[illegible]下	±0.3	表面アラサ			▽▽▽	6.3S	(1.6a)
	0.5以上 6以下	±0.1	120ヲコエ315以下	±0.5	仕上記号	Rmax	(Ra)	▽▽	25S	(6.3a)
	6ヲコエ 30以下	±0.2	315ヲコエ1000以下	±0.8	▽▽▽▽	0.8S	(0.2a)	▽	100S	(25a)

材質：ニトリルゴム　厚サ1mm

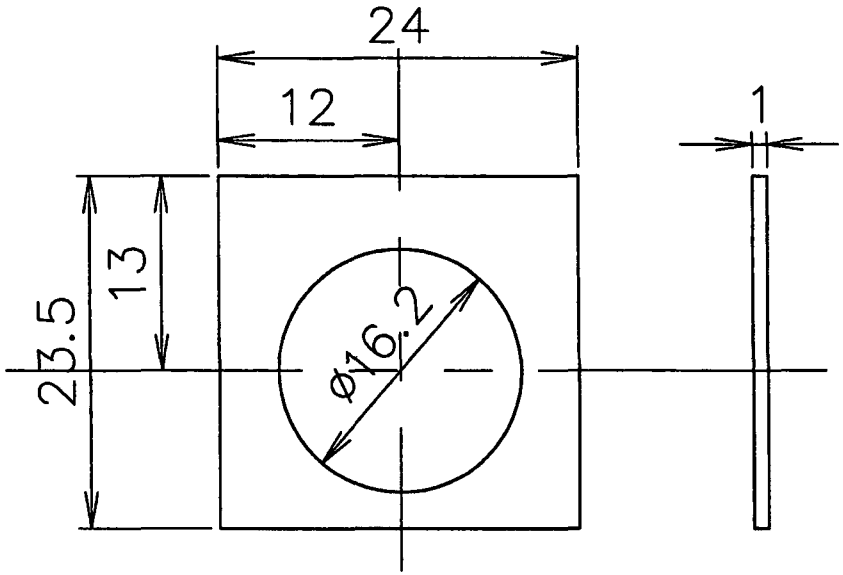

REV. MARK	NOTE		DATE	DESIGNED		CHK.	APVD.
—	3次品スラスタ	−	'03 12/17	小林	−	[illegible]	[illegible]

MATERIAL: ニトリルゴム
WEIGHT
RELATION NO.
SCALE: 2:1

NAME: スイッチカバー用パッキン
（AL−KH6SP用）

CODE NO.: 950
DWG. NO.: 74759133

NABCO Ltd.

AC

Nabtesco

74Y54676−01	1/2

SPARE PARTS LIST 予　備　品　表	SPEC NO.	
NAME MTHⅢ THRUSTER REMOTE CONTROL SYSTEM	BOX NO.	

Nabtesco Corporation

MARINE CONTROL SYSTEMS COMPANY
ENGINEERING DEPARTMENT

REV. NOTE 記号	NOTE 来歴		DATE 日付	DESIGNED 担当		CHK. 検図	APVD. 承認
a	⇐ZH: 項目5. ポテンショ使用個数変更	c	'05 2.28	石川	—	東	馬
—	———————	—	'04 10.19	石川	—	東	馬

ADDRESS :
1617−1, Fukuyoshi−dai 1−chome, Nishi−ku, Kobe, 651−2413, Japan
Phone No. Kobe +81−78−967−5361 Fax. No. Kobe +81−78−967−5362

AC

Nabtesco

74Y54676−01 | 2/2

SPARE PARTS LIST 予 備 品 表	SPEC NO.	
NAME MTHⅢ THRUSTER REMOTE CONTROL SYSTEM	BOX NO.	

NO. 項目	DESCRIPTION 品 名	OUTLINE 外 形 図	PC. NO. 品 番	個数 Q'TY WORKING PERSET	WORKING PERSHIP	SPARE	REMARKS 記 事	REV. 改正
1	FUSE NCO 5A	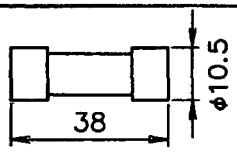	74734176 −03		2	2	UTSUNOMIYA	
2	FUSE NCO 10A	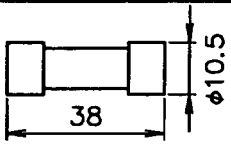	74734176 −04		2	2	UTSUNOMIYA	
3	FUSE 125V 5A	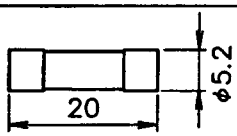	74755815 −07		4	4	FUJI	
4	FUSE 125V 10A	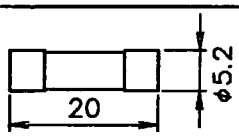	74755815 −11		2	2	FUJI	
5	POTENTIOMETER 2WDD35D−4	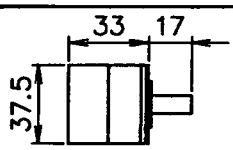	74753573 −01		4	1	2KX2	
6	SPACER M5 L=30	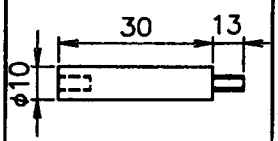	74757581 −13		−	4	FOR MAINTENANCE	
7	PORTABLE KEYPAD	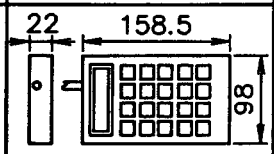	74759070 −01		−	1	WITH CABLE 1.8m, CONNECTOR FOR MAINTENANCE	

ADDRESS :
1617−1, Fukuyoshi−dai 1−chome, Nishi−ku, Kobe, 651−2413, Japan
Phone No. Kobe +81−78−967−5361 Fax. No. Kobe +81−78−967−5362

AC

削り加工	呼ビ寸法区分	許容差	30ヲコエ120以下	±0.3	表面アラサ			▽▽▽	6.3S	(1.6a)
	0.5以上 6以下	±0.1	120ヲコエ315以下	±0.5	仕上記号	Rmax	(Ra)	▽▽	25S	(6.3a)
	6ヲコエ 30以下	±0.2	315ヲコエ1000以下	±0.8	▽▽▽▽	0.8S	(0.2a)	▽	100S	(25a)

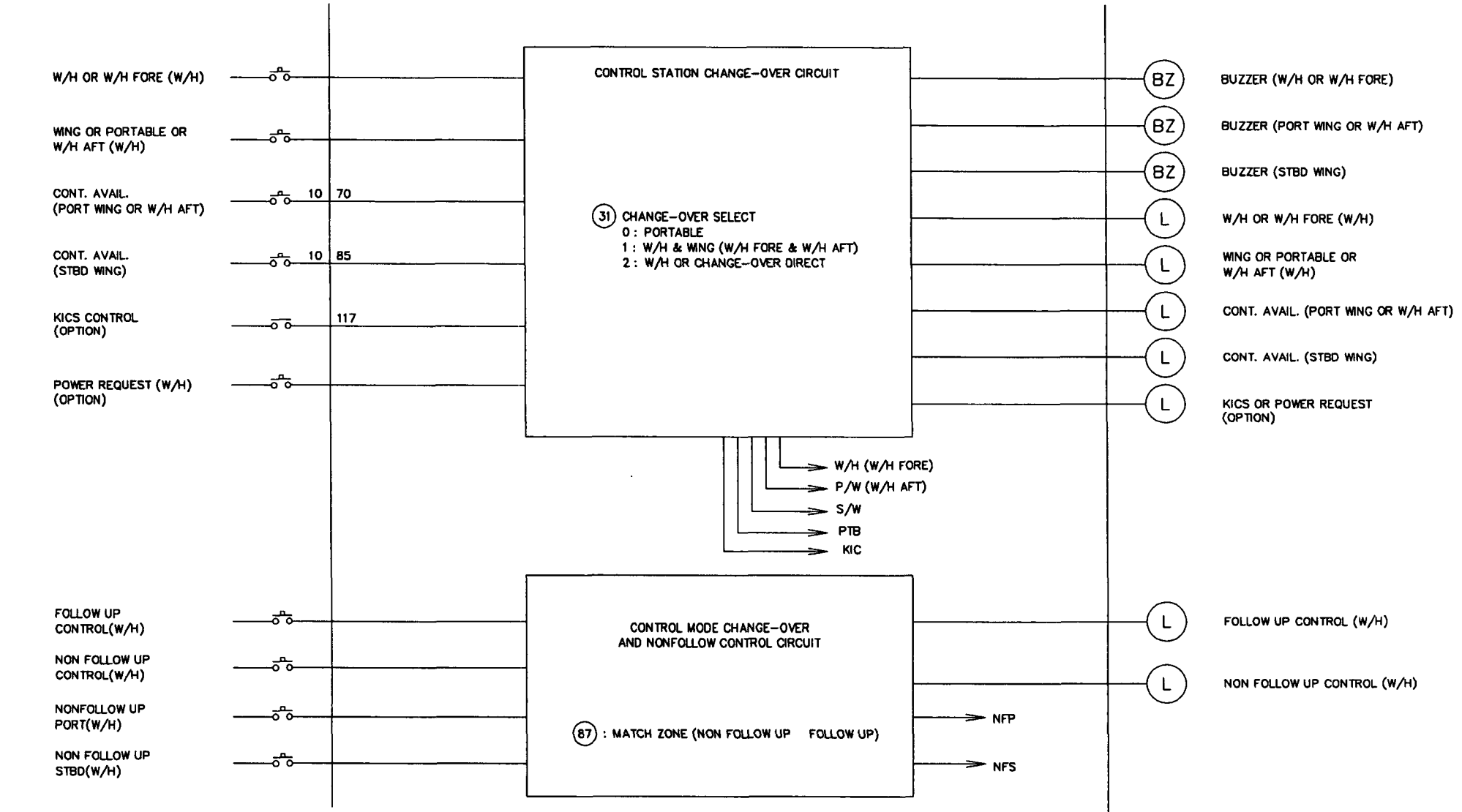

○ : ADDRESS FOR COMMON USE

□ : ADDRESS FOR MONITOR

REV. MARK	NOTE		DATE	DESIGNED	CHK.	APV'D.
b	一部書キ改メル	c	'05 10.5	石川	—	東
a	6/6=訂正	c	'04 10.5	石川	—	東
—	MTHIII STD		'01 10.15	小林	—	東

MATERIAL
WEIGHT
RELATION NO.
SCALE

NAME
THRUSTER REMOTE CONTROL SYSTEM
SOFTWARE DIAGRAM

CODE NO.

DWG. NO.
73SS48867-01 1/6

Nabtesco Corporation

AC

削り加工	呼び寸法区分	許容差	30ヲコエ120以下	±0.3	表面アラサ			▽▽▽	6.3S	(1.6a)
	0.5以上 6以下	±0.1	120ヲコエ315以下	±0.5	仕上記号	Rmax	(Ra)	▽▽	25S	(6.3a)
	6ヲコエ 30以下	±0.2	315ヲコエ1000以下	±0.8	▽▽▽▽	0.8S	(0.2a)	▽	100S	(25a)

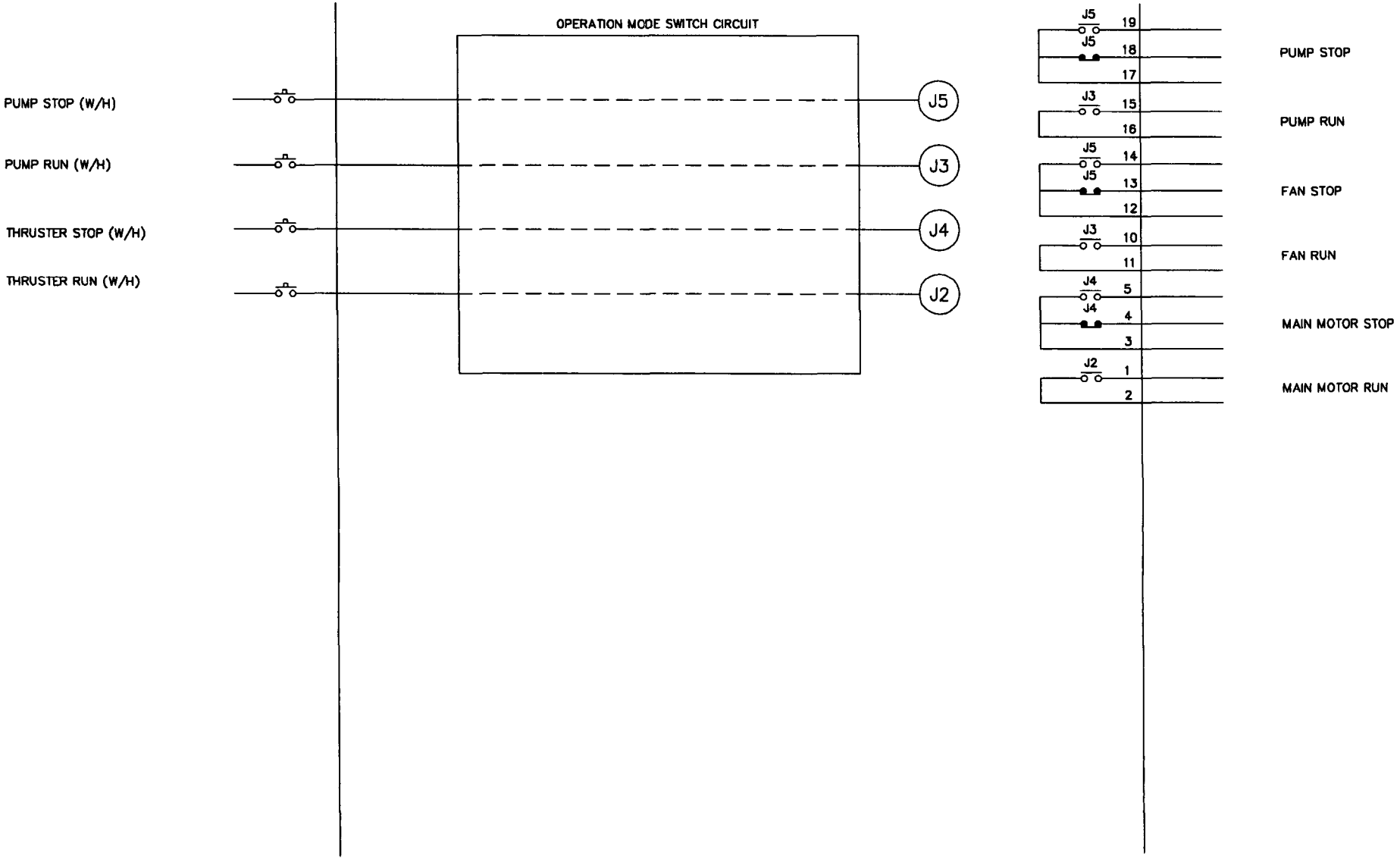

REV. MARK	NOTE	DATE	DESIGNED	CHK.	APV'D
—					

MATERIAL

WEIGHT

RELATION NO.

SCALE

NAME

THRUSTER REMOTE CONTROL SYSTEM

SOFTWARE DIAGRAM

CODE NO

DWG NO. 73SS48867-01 2/

Nabtesco Corporation

AC

削り加工	呼ビ寸法区分	許容差	30ヲコエ120以下	±0.3	表面アラサ			▽▽▽	6.3S	(1.6a)
	0.5以上 6以下	±0.1	120ヲコエ315以下	±0.5	記号	Rmax	(Ra)	▽▽	25S	(6.3a)
	6ヲコエ 30以下	±0.2	315ヲコエ1000以下	±0.8	▽▽▽▽	0.8S	(0.2a)	▽	100S	(25a)

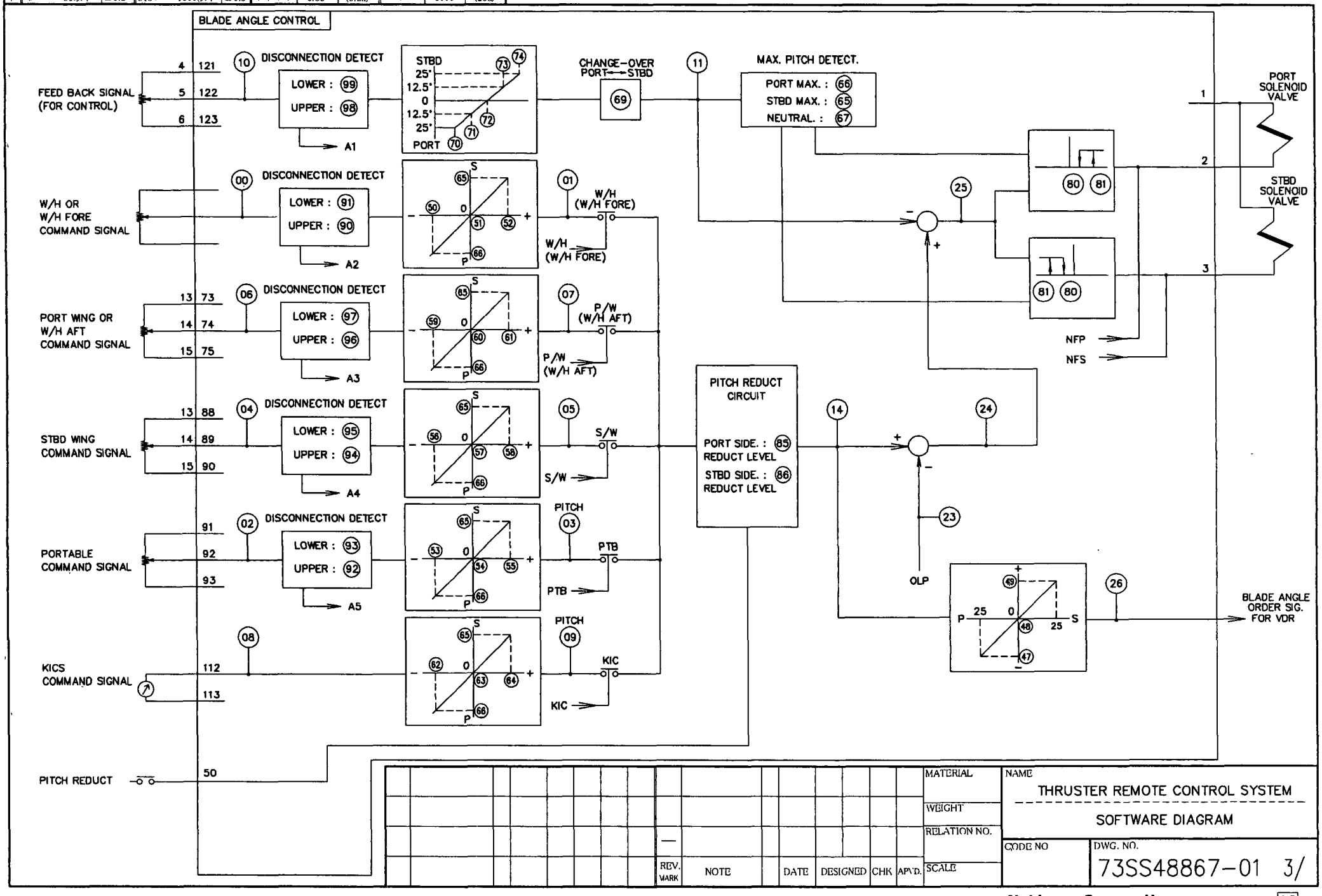

REV. MARK	NOTE	DATE	DESIGNED	CHK	APV'D.
—					

MATERIAL
WEIGHT
RELATION NO.
SCALE

NAME
THRUSTER REMOTE CONTROL SYSTEM
SOFTWARE DIAGRAM

CODE NO

DWG. NO.
73SS48867-01 3/

Nabtesco Corporation

AC

削り加工	呼び寸法区分	許容差	30ヲコエ120以下	±0.3	表面アラサ			▽▽▽	6.3S	(1.6a)
	0.5以上 6以下	±0.1	120ヲコエ315以下	±0.5	旧記号	Rmax	(Ra)	▽▽	25S	(6.3a)
	6ヲコエ 30以下	±0.2	315ヲコエ1000以下	±0.8	▽▽▽▽	0.8S	(0.2a)	▽	100S	(25a)

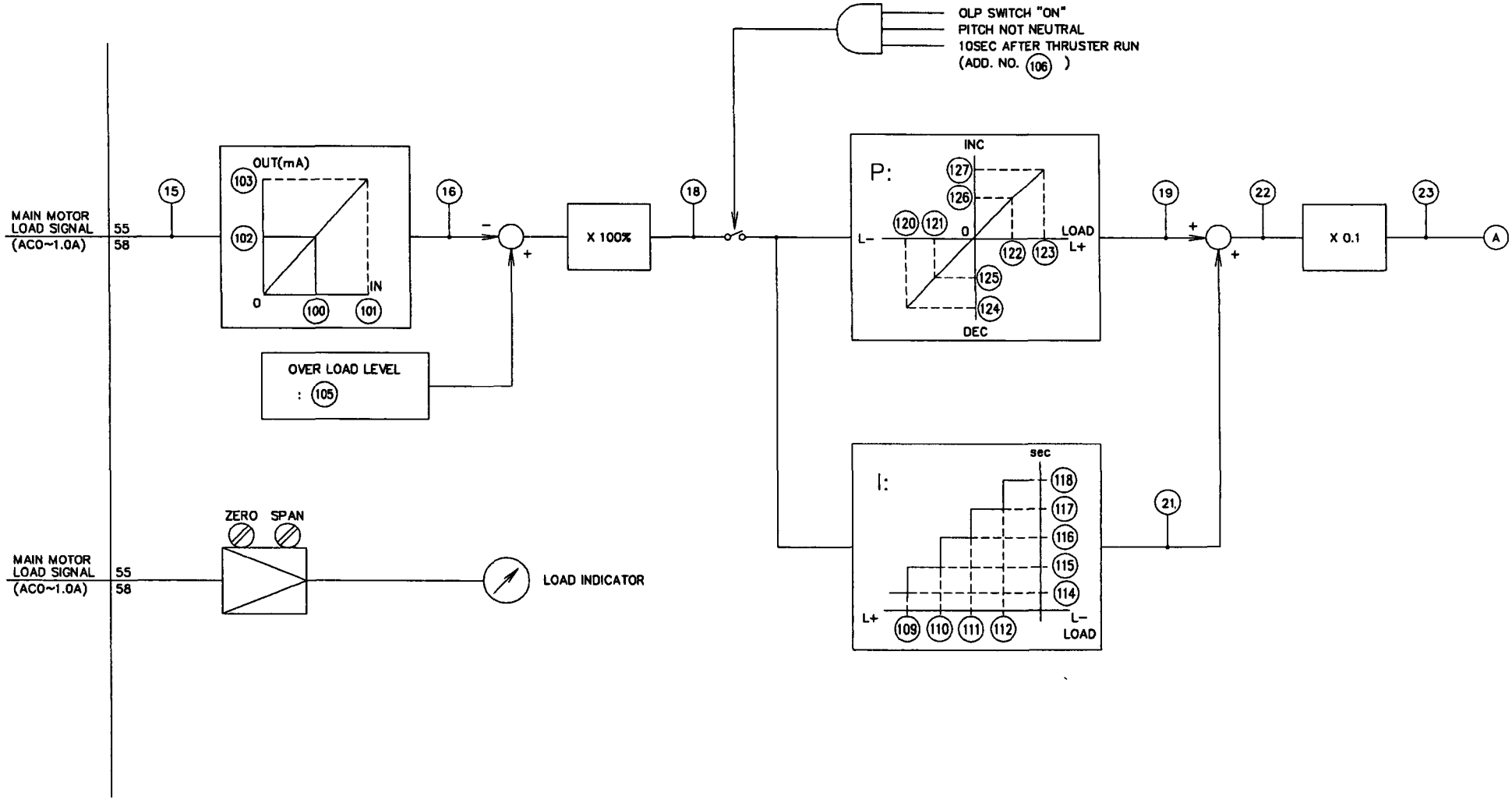

REV MARK	NOTE	DATE	DESIGNED	CHK.	APV'D
—					

MATERIAL
WEIGHT
RELATION NO
SCALE

NAME
THRUSTER REMOTE CONTROL SYSTEM
SOFTWARE DIAGRAM

CODE NO
DWG NO
73SS48867-01 4/

Nabtesco Corporation

AC

削り加工	呼ビナ法区分	許容差	30ヲコエ120以下	±0.3	表面アラサ			▽▽▽	6.3S	(1.6a)
	0.5以上 6以下	±0.1	120ヲコエ315以下	±0.5	仕上記号	Rmax	(Ra)	▽▽	25S	(6.3a)
	6ヲコエ 30以下	±0.2	315ヲコエ1000以下	±0.8	▽▽▽▽	0.8S	(0.2a)	▽	100S	(25a)

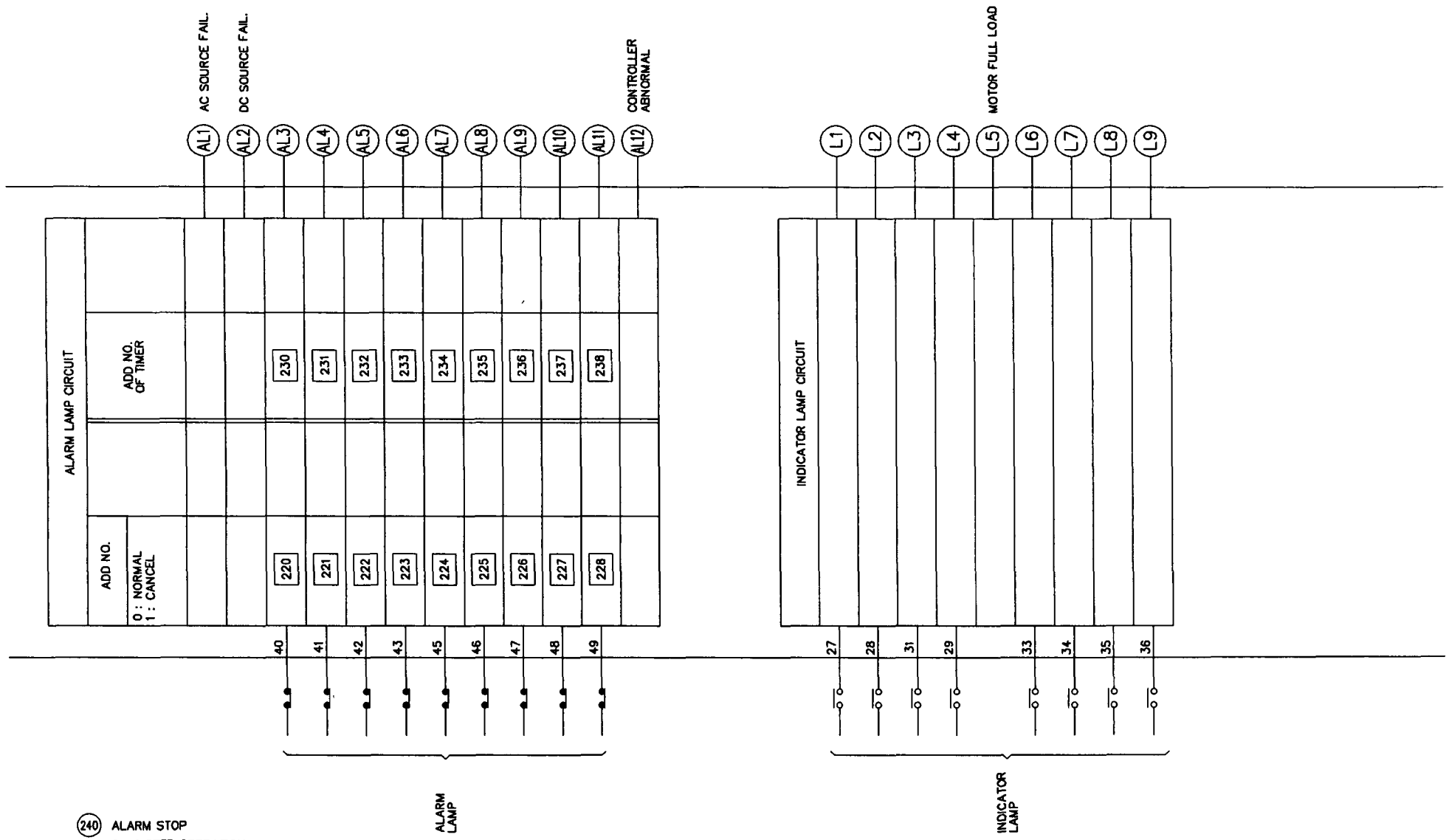

(240) ALARM STOP
0 : 1 STEP OPERATION
1 : 2 STEP OPERATION

REV. MARK	NOTE	DATE	DESIGNED	CHK.	APV'D.
—					

MATERIAL
WEIGHT
RELATION NO.
SCALE

NAME
THRUSTER REMOTE CONTROL SYSTEM
SOFTWARE DIAGRAM

CODE NO.
DWG. NO.
73SS48867-01 5/

Nabtesco Corporation

AC

削り加工	呼ビ寸法区分	許容差	30ヲコエ120以下	±0.3	表面アラサ			▽▽▽	6.3S	(1.6a)
	0.5以上 6以下	±0.1	120ヲコエ315以下	±0.5	仕上記号	Rmax	(Ra)	▽▽	25S	(6.3a)
	6ヲコエ 30以下	±0.2	315ヲコエ1000以下	±0.8	▽▽▽▽	0.8S	(0.2a)	▽	100S	(25a)

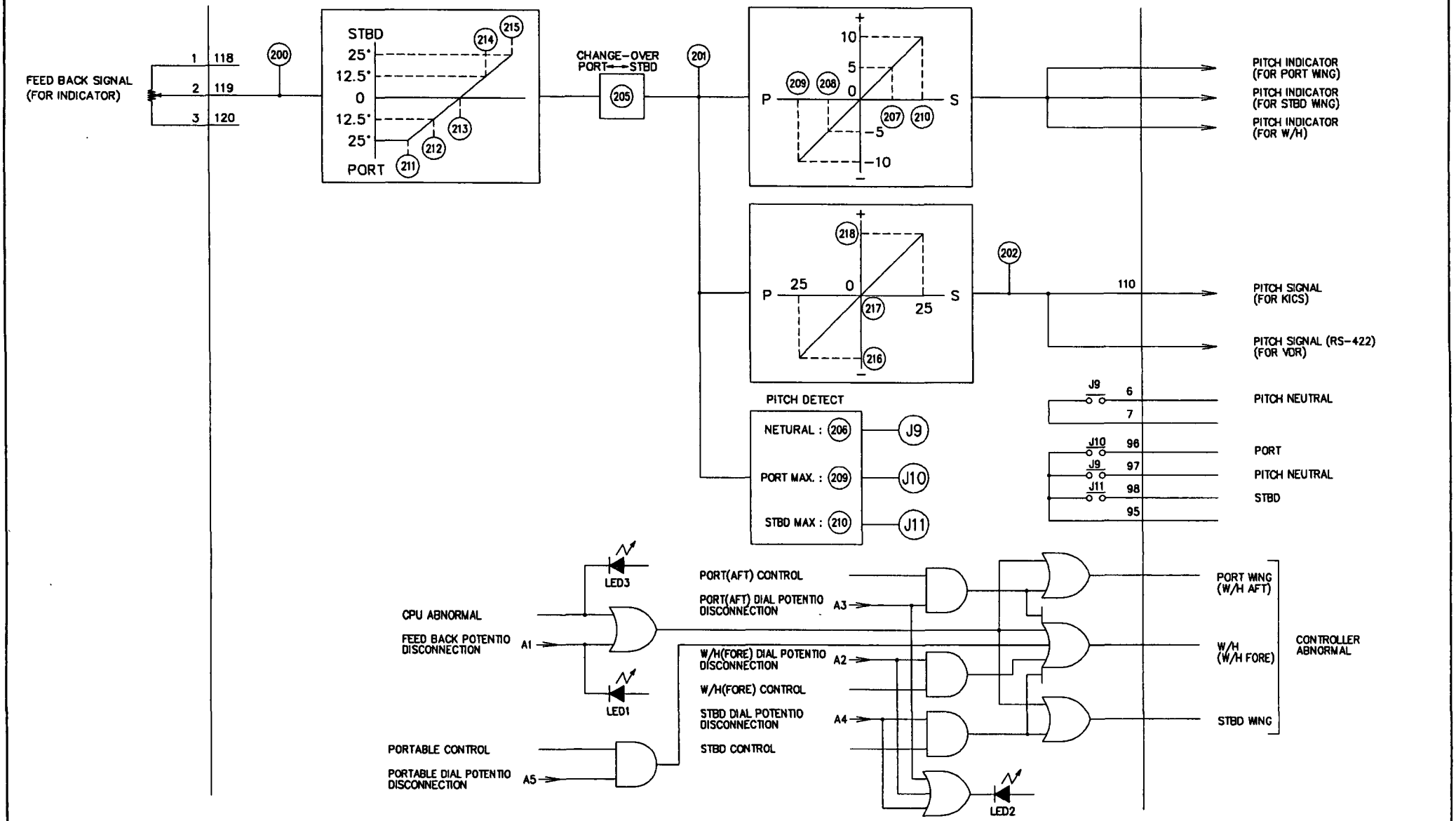

REV. MARK	NOTE	DATE	DESIGNED	CHK.	APV'D.
a	本図ニ書キ改メル				
—					

MATERIAL
WEIGHT
RELATION NO.
SCALE

NAME
THRUSTER REMOTE CONTROL SYSTEM
SOFTWARE DIAGRAM

CODE NO.

DWG. NO.
73SS48867-01 6/6

Nabtesco Corporation

AC

Adjusting Manual
for
MTH Ⅲ Type Thruster Remote Control System

SHIP YARD : HYUNDAI HEAVY INDUSTRIES CO., LTD.

SHIP NO. : H-1630 / H-1631 / H-1671 / H-1672 / H-1699
H-1700 / H-1701 / H-1733

THRUSTER TYPE : KAWASAKI HEAVY INDUSTRIES, LTD.
KT-157B3 (BOW)
KT-88B3 (STERN)

RULE : LR

Nabtesco Corporation
MARINE CONTROL SYSTEMS COMPANY
ENGINEERING DEPARTMENT

–		–	'05 5/13	石川	——	李	馬場
REV. MARK	NOTE		DATE	DESIGNED		CHK.	APVD.

Adjusting Manual for MTH Ⅲ Type Thruster Remote Control System

This adjusting manual contains adjusting procedures at shops and on board; after delivery, it is recommended to carry out only the adjustment items on board except the replacement of parts. Use only a digital multi-meter (DMM) for electrical measurement

Adjustment before Shipment from Nabtesco

☆Check and adjustment of a power supply

Adjust an AC/DC converter so that the output voltage of an converter is set to 25.5±0.5V.

Actual measurement : _____ V

1. Adjustment of DIP switch and rotary switch

Adjustment of the switch in the W/H controller.

a) DIP switch

DIP SW.	1	2	3	4
DIPSW1	OFF	OFF	OFF	OFF
DIPSW11	OFF	OFF	OFF	OFF

b) rotary switch

Rotary switch	Set position
RSW1	1
RSW11	1

c) selector switch

"OLP CANCEL" switch setup "OFF"

(BOW)

2. Zero Point Adjustment of Potentiometer

a) W/H maneuvering dial

a. Maneuvering dial is set as "0."

b. Adjust the potentiometer so that address 000 shows 5.0 ±0.1.

b) PORT maneuvering dial

a. Maneuvering dial is set as "0."

b. Adjust the potentiometer so that address 006 shows 5.0 ±0.1.

c) STBD maneuvering dial

a. Maneuvering dial is set as "0."

b. Adjust the potentiometer so that address 004 shows 5.0 ±0.1.

d) Blade angle transmitter

a. Blade angle is set as "0."

b. The voltage between the terminal numbers 2-3 is set as 7.5±0.3V.

V

(BOW)

3. Setting Ten-keys

Please set up the data of the ten key address number indicated.

Refer to 74SS48882-01E for the handling manual of a ten key pad.

3-1. System Setting

ADD	Description	Contents	Data
030	KICS selection	0:KICS NOT USED 1:KICS USED	0
031	Change-over selection	0:PORTABLE 1:WING 2:W/H or DIRECT	1
032	Power request selection	0:NOT USED 1: USED	1
033	POWER REQUEST STOP selection	0:M/M STOP 1:POWER AVAIL	0
034	VDR Thruster number	Odd : BOW Even : STERN (0~9)	1
035	W/H Dial order signal	0:PORT-STBD 1:STBD-PORT	0
036	STBD Dial order signal	0:PORT-STBD 1:STBD-PORT	0
037	PORT Dial order signal	0:PORT-STBD 1:STBD-PORT	0
065,210	STBD Max. Limit	10~25Deg	25
066,209	PORT Max. Limit	-25~-10Deg	-25
069,205	Blade angle transmitter	When a chain goes into KCF, −1:STBD 1:PORT	1
085	PORT reduction level	-25~0Deg	0
086	STBD reduction level	0~25Deg	0
105	OLP set	0~999mA	710
106	OLP timer	0~60Sec	10
220	AL3 alarm selection	0:USED 1:NOT USED	0
221	AL4 alarm selection	0:USED 1:NOT USED	0
222	AL5 alarm selection	0:USED 1:NOT USED	0
223	AL6 alarm selection	0:USED 1:NOT USED	0
224	AL7 alarm selection	0:USED 1:NOT USED	0
225	AL8 alarm selection	0:USED 1:NOT USED	0
226	AL9 alarm selection	0:USED 1:NOT USED	0
227	AL10 alarm selection	0:USED 1:NOT USED	0
228	AL11 alarm selection	0:USED 1:NOT USED	1
229	AL11 mode selection	0:Alarm lamp 1:Auto pitch reduct	1
239	Reduct pattern selection	0:Other 1:Auto zero pitch(L9)	0
240	Bz stop selection	0:Normal 1:NV (2step)	0
241	WING M/M run lamp	0:needles 1:needfull	1
245	D.out signal selection	0:NOT USED 1:Cont. pos.(Fig.1) 2:Others(Fig.2)	0
250	W/H Pitch indicator	−1:STBD-PORT 1:PORT-STBD	1
251	STBD Pitch indicator	−1:STBD-PORT 1:PORT-STBD	1
252	PORT Pitch indicator	−1:STBD-PORT 1:PORT-STBD	1

Address"245" Digital output signal

Output sig. (Cont. pos.)	TBU 20-21	TBU 22-23
W/H	CLOSE	CLOSE
PORT WING	CLOSE	OPEN
STBD WING	OPEN	CLOSE
OFF	OPEN	OPEN

Fig. 1

Operation	TBU 20-21	TBU 22-23
Case of pitch neutral	CLOSE	—
Case of portable	—	CLOSE

Fig. 2

NOTE ; Please power OFF at the time of the desorption of a ten key pad.

To change the data with the ten-key pad, be sure to shift the control position to "W/H".

(BOW)

4. Adjustment of Potentiometer

4-1. W/H maneuvering dial

a. The value of an address "000" is read in a following dial position, and the value is inputted into the address shown to ( )

PORT10 _____ (050)

0 _____ (051)

STBD10 _____ (052)

4-2. STBD maneuvering dial

a. The value of an address "004" is read in a following dial position, and the value is inputted into the address shown to ( )

PORT10 _____ (056)

0 _____ (057)

STBD10 _____ (058)

4-3. PORT maneuvering dial

a. The value of an address "006" is read in a following dial position, and the value is inputted into the address shown to ( )

PORT10 _____ (059)

0 _____ (060)

STBD10 _____ (061)

4-4. Blade angle transmitter

a. The value of an address "010" is read in a following blade angle position, and the value is inputted into the address shown to ( )

When ten keys 069 and 205 are -1	When ten keys 069 and 205 are 1	Value of Add"010"	Data input Add
STBD 25°	PORT 25°		(070)
STBD 12.5°	PORT 12.5°		(071)
0°	0°		(072)
PORT 12.5°	STBD 12.5°		(073)
PORT 25°	STBD 25°		(074)

b. The value of an address "200" is read in a following blade angle position, and the value is inputted into the address shown to ( )

When ten keys 069 and 205 are -1	When ten keys 069 and 205 are 1	Value of Add"200"	Data input Add
STBD 25°	PORT 25°		(211)
STBD 12.5°	PORT 12.5°		(212)
0°	0°		(213)
PORT 12.5°	STBD 12.5°		(214)
PORT 25°	STBD 25°		(215)

(BOW)

5. Adjustment of blade angle signal output (terminal 110−111) (NOT USED)

(1) Change blade angle signal so that address "201" of ten key shows "STBD 25".
Adjust data of address "218" so that voltage of terminal No. 110-111 is 10.0±0.05V.
If a setting value is increased, voltage will go up.

(2) Change blade angle signal so that address "201" of ten key shows "0".
Adjust data of address "217" so that voltage of terminal No. 110-111 is 0.0±0.05V.
If a setting value is increased, voltage will go up.

(3) Change blade angle signal so that address "201" of ten key shows "PORT 25".
Adjust data of address "216" so that voltage of terminal No. 110-111 is -10.0±0.05V.
If a setting value is increased, voltage will go up.

5-1. Adjustment of pitch indicator (NOT USED)

(1) Change blade angle signal so that address "201" of ten key shows "0".
Adjust trimmer ZERO of Isolation Amplifier so that pitch indicated is "0".

(2) Change blade angle signal so that address "201" of ten key shows "STBD25".
Adjust trimmer SPAN of Isolation Amplifier so that pitch indicated is "STBD25".

6. Adjustment of load signal

6-1. Adjustment of load indicator

(1) The load current between the terminal stands 59-60 is set as 0A.
Adjust trimmer VR2(ZERO) of controller so that load indicated is "0".

(2) The load current between the terminal stands 59-60 is set as OLP value.
Adjust trimmer VR1(GAIN) of controller so that load indicated is "100".

6-2. Adjustment of load signal for OLP control.

(1) The load current between the terminal stands 55-58 is set as 1A.
Reading of an address "015" is inputted into the data of an address "101".

(2) The load current between the terminal stands 55-58 is set as 0.5A.
Reading of an address "015" is inputted into the data of an address "100".

(BOW)

Adjustment on Board

1. Blade angle transmitter
   a. Blade angle is set as "0."
   b. The voltage between the terminal numbers 2-3 is set as 7.5±0.3V.

      _____ V

      (Please enforce the slack stop of a fixed screw certainly.)

2. Adjustment of blade angle transmitter

2-1. Make non follow up control condition

2-2. Under machine side control, press manual buttons provided on the solenoid valve in the hydraulic unit to set the following blade angles of propeller as correct as possible.

When carrying out the adjustment by oneself, the method in 2-3,2-4 is recommendable.

a. The value of an address "010" is read in a following blade angle position, and the value is inputted into the address shown to ( )

When ten keys 069 and 205 are -1	When ten keys 069 and 205 are 1	Value of Add"010"	Data input Add
STBD 25°	PORT 25°		(070)
STBD 12.5°	PORT 12.5°		(071)
0°	0°		(072)
PORT 12.5°	STBD 12.5°		(073)
PORT 25°	STBD 25°		(074)

b. The value of an address "200" is read in a following blade angle position, and the value is inputted into the address shown to ( )

When ten keys 069 and 205 are -1	When ten keys 069 and 205 are 1	Value of Add"200"	Data input Add
STBD 25°	PORT 25°		(211)
STBD 12.5°	PORT 12.5°		(212)
0°	0°		(213)
PORT 12.5°	STBD 12.5°		(214)
PORT 25°	STBD 25°		(215)

(BOW)

2-3. Make non follow up control condition

2-4. Under machine side control, press manual buttons provided on the solenoid valve in the hydraulic unit to set the following blade angles of propeller as correct as possible.

a. The output voltage of potentiometer is measured with the terminal 5-6 of blade angle transmitter in a following blade angle position.
b. Input the value into the address shown in ( ).

When ten keys 069 and 205 are -1	When ten keys 069 and 205 are 1	Voltage of terminal 5-6	Data input Add
STBD 25°	PORT 25°		(070)
STBD 12.5°	PORT 12.5°		(071)
0°	0°		(072)
PORT 12.5°	STBD 12.5°		(073)
PORT 25°	STBD 25°		(074)

a. The output voltage of potentiometer is measured with the terminal 2-3 of blade angle transmitter in a following blade angle position.
b. Input the value into the address shown in ( ).

When ten keys 069 and 205 are -1	When ten keys 069 and 205 are 1	Voltage of terminal 2-3	Data input Add
STBD 25°	PORT 25°		(211)
STBD 12.5°	PORT 12.5°		(212)
0°	0°		(213)
PORT 12.5°	STBD 12.5°		(214)
PORT 25°	STBD 25°		(215)

(BOW)

3. Detecting neutral signal

   Enter ± blade angle into address "067"and "206".

4. Setting maximum blade angle limitation

   Considering the hydraulic system, enter slightly lower values than calculated values in to the corresponding ten-key address and then check the actual blade angles at the local scale.

   a. PORT side ------ Enter maximum blade angle into address "066" and "209".
      Enter 1/2 value of address "209" into address "208"
   b. STBD side ------ Enter maximum blade angle into address "065" and "210".
      Enter 1/2 value of address "210" into address "207"

5. Setting dial matching zone of change over interlock

   Non-follow→Follow change over : Enter it into address "087".

6. Setting dead zone

   Solenoid valve OFF deviation : Enter it into address "080".
   Solenoid valve ON deviation : Enter it into address "081".

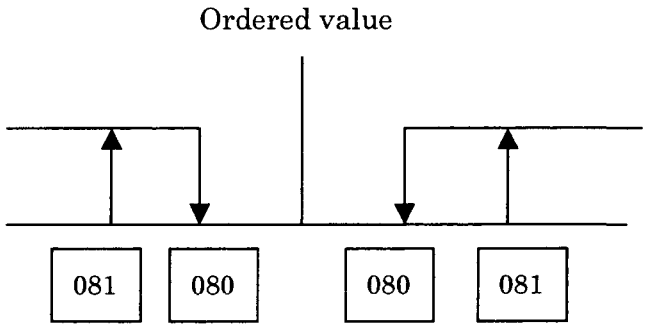

7. Setting blade angle at the time of reducing demand.

   Blade angle is reduced on the pre-set value at the time of reducing demand.

   However, it works only case of maneuvering dial order is higher than setting value.

   a. PORT side ------ Enter into address "085". (Input range –25~0 Deg)
   b. STBD side ------ Enter into address "086". (Input range 0~25 Deg)

   In case of no use this function, enter "-25" into address"085" and "25" into address"086".

   Moreover, in case of use auto zero pitch function, enter "0" into address "085" and "086".

(BOW)

8. Adjustment of blade angle signal output (terminal 110－111) (NOT USED)

(1) Change blade angle signal so that address "201" of ten key shows "STBD 25".
Adjust data of address "218" so that voltage of terminal No. 110-111 is 10.0±0.05V.
If a setting value is increased, voltage will go up.

(2) Change blade angle signal so that address "201" of ten key shows "0".
Adjust data of address "217" so that voltage of terminal No. 110-111 is 0.0±0.05V.
If a setting value is increased, voltage will go up.

(3) Change blade angle signal so that address "201" of ten key shows "PORT 25".
Adjust data of address "216" so that voltage of terminal No. 110-111 is -10.0±0.05V.
If a setting value is increased, voltage will go up.

8-1. Adjustment of pitch indicator (NOT USED)

(1) Change blade angle signal so that address "201" of ten key shows "0".
Adjust trimmer ZERO of Isolation Amplifier so that pitch indicated is "0".

(2) Change blade angle signal so that address "201" of ten key shows "STBD25".
Adjust trimmer SPAN of Isolation Amplifier so that pitch indicated is "STBD25".

(BOW)

9. Setting OLP control

OLP level: Address mA is inputted into "105" for an OLP value.

Formula:

(main motor rated current {A} / CT rated current {A}) x1000=OLP value {mA} = address "105"

Amount of Load deviations displayed address "018" (+ : Light load、— : Over load Unit %)

Amount of OLP control displayed address "023" (+ : Addition、— : Subtraction Unit Deg)

Order of blade angle displayed address "024" (+ : PORT order、— : STBD order Unit Deg)

Order of dial displayed address "014" (+ : PORT order、— : STBD order Unit Deg)

Proportionality : A proportionality value can be set up by the following table.

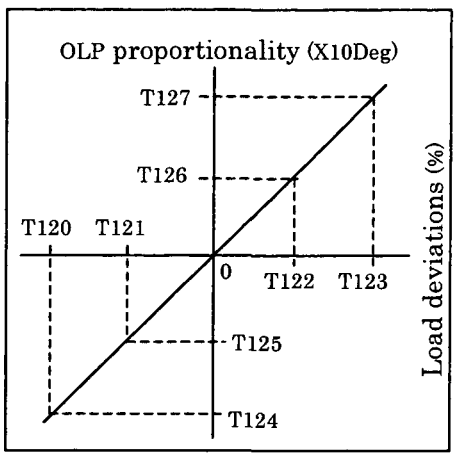

The standard value is as follows.

Load deviations (%)		OLP OLP proportionality (X10Deg)	
Address	Data	Address	Data
T120	-10	T124	-10
T121	-5	T125	-5
deviation 0	0	deviation 0	0
T122	5	T126	5
T123	10	T127	10

Setup of −1Deg is standard in 110% load.

OLP proportionality value is displayed in address "019" (+ : Addition、— : Subtraction Unit X10Deg)

Integration : A Integration value can be set up by the following table.

Load setup	Load				Blade angle moving speed		
	Detect address	Detect range	Unit	standard value	Setup address	Unit	Standard value
Over	—	0% or less	%	—	T118	X10deg/10Sec	20
Heavy	T112	T112～T111	%	0	T117	X10deg/10Sec	10
Middle	T111	T111～T110	%	10	T116	X10deg/10Sec	10
Light	T110	T110～T109	%	20	T115	X10deg/10Sec	20
Small	T109	T109 以上	%	20	T114	X10deg/10Sec	20

Blade angle moving speed of a standard value has set up 2points.

Blade angle moving speed can be set up to 4points maximum.

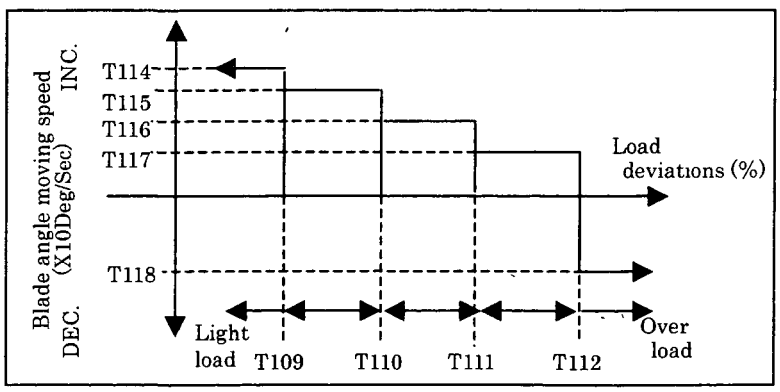

Adjusting Manual for MTH Ⅲ Type Thruster Remote Control System

This adjusting manual contains adjusting procedures at shops and on board; after delivery, it is recommended to carry out only the adjustment items on board except the replacement of parts. Use only a digital multi-meter (DMM) for electrical measurement

Adjustment before Shipment from Nabtesco

☆Check and adjustment of a power supply

Adjust an AC/DC converter so that the output voltage of an converter is set to 25.5±0.5V.

Actual measurement : V

1. Adjustment of DIP switch and rotary switch

Adjustment of the switch in the W/H controller.

a) DIP switch

DIP SW.	1	2	3	4
DIPSW1	OFF	OFF	OFF	OFF
DIPSW11	OFF	OFF	OFF	OFF

b) rotary switch

Rotary switch	Set position
RSW1	1
RSW11	1

c) selector switch

"OLP CANCEL" switch setup "OFF"

(STERN)

2. Zero Point Adjustment of Potentiometer

a) W/H maneuvering dial

a. Maneuvering dial is set as "0."

b. Adjust the potentiometer so that address 000 shows 5.0 ±0.1.

b) PORT maneuvering dial

a. Maneuvering dial is set as "0."

b. Adjust the potentiometer so that address 006 shows 5.0 ±0.1.

c) STBD maneuvering dial

a. Maneuvering dial is set as "0."

b. Adjust the potentiometer so that address 004 shows 5.0 ±0.1.

d) Blade angle transmitter

a. Blade angle is set as "0."

b. The voltage between the terminal numbers 2-3 is set as 7.5±0.3V.

_____ V

(STERN)

3. Setting Ten-keys

Please set up the data of the ten key address number indicated.

Refer to 74SS48882-01E for the handling manual of a ten key pad.

3-1. System Setting

ADD	Description	Contents	Data
030	KICS selection	0:KICS NOT USED 1:KICS USED	0
031	Change-over selection	0:PORTABLE 1:WING 2:W/H or DIRECT	1
032	Power request selection	0:NOT USED 1: USED	1
033	POWER REQUEST STOP selection	0:M/M STOP 1:POWER AVAIL	0
034	VDR Thruster number	Odd : BOW Even : STERN (0~9)	2
035	W/H Dial order signal	0:PORT-STBD 1:STBD-PORT	1
036	STBD Dial order signal	0:PORT-STBD 1:STBD-PORT	1
037	PORT Dial order signal	0:PORT-STBD 1:STBD-PORT	1
065,210	STBD Max. Limit	10~25Deg	25
066,209	PORT Max. Limit	-25~-10Deg	-25
069,205	Blade angle transmitter	When a chain goes into KCF, -1:STBD 1:PORT	1
085	PORT reduction level	-25~0Deg	0
086	STBD reduction level	0~25Deg	0
105	OLP set	0~999mA	662
106	OLP timer	0~60Sec	10
220	AL3 alarm selection	0:USED 1:NOT USED	0
221	AL4 alarm selection	0:USED 1:NOT USED	0
222	AL5 alarm selection	0:USED 1:NOT USED	0
223	AL6 alarm selection	0:USED 1:NOT USED	0
224	AL7 alarm selection	0:USED 1:NOT USED	0
225	AL8 alarm selection	0:USED 1:NOT USED	0
226	AL9 alarm selection	0:USED 1:NOT USED	1
227	AL10 alarm selection	0:USED 1:NOT USED	0
228	AL11 alarm selection	0:USED 1:NOT USED	1
229	AL11 mode selection	0:Alarm lamp 1:Auto pitch reduct	1
239	Reduct pattern selection	0:Other 1:Auto zero pitch(L9)	0
240	Bz stop selection	0:Normal 1:NV (2step)	0
241	WING M/M run lamp	0:needles 1:needfull	1
245	D.out signal selection	0:NOT USED 1:Cont. pos.(Fig.1) 2:Others(Fig.2)	0
250	W/H Pitch indicator	-1:STBD-PORT 1:PORT-STBD	1
251	STBD Pitch indicator	-1:STBD-PORT 1:PORT-STBD	1
252	PORT Pitch indicator	-1:STBD-PORT 1:PORT-STBD	1

Address"245" Digital output signal

Output sig. (Cont. pos.)	TBU 20-21	TBU 22-23
W/H	CLOSE	CLOSE
PORT WING	CLOSE	OPEN
STBD WING	OPEN	CLOSE
OFF	OPEN	OPEN

Fig. 1

Operation	TBU 20-21	TBU 22-23
Case of pitch neutral	CLOSE	—
Case of portable	—	CLOSE

Fig. 2

NOTE ; Please power OFF at the time of the desorption of a ten key pad.

To change the data with the ten-key pad, be sure to shift the control position to "W/H".

(STERN)

4. Adjustment of Potentiometer

4-1. W/H maneuvering dial

a. The value of an address "000" is read in a following dial position, and the value is inputted into the address shown to ( )

STBD10 _____ (050)

0 _____ (051)

PORT10 _____ (052)

4-2. STBD maneuvering dial

a. The value of an address "004" is read in a following dial position, and the value is inputted into the address shown to ( )

STBD10 _____ (056)

0 _____ (057)

PORT10 _____ (058)

4-3. PORT maneuvering dial

a. The value of an address "006" is read in a following dial position, and the value is inputted into the address shown to ( )

STBD10 _____ (059)

0 _____ (060)

PORT10 _____ (061)

4-4. Blade angle transmitter

a. The value of an address "010" is read in a following blade angle position, and the value is inputted into the address shown to ( )

When ten keys 069 and 205 are -1	When ten keys 069 and 205 are 1	Value of Add"010"	Data input Add
STBD 25°	PORT 25°		(070)
STBD 12.5°	PORT 12.5°		(071)
0°	0°		(072)
PORT 12.5°	STBD 12.5°		(073)
PORT 25°	STBD 25°		(074)

b. The value of an address "200" is read in a following blade angle position, and the value is inputted into the address shown to ( )

When ten keys 069 and 205 are -1	When ten keys 069 and 205 are 1	Value of Add"200"	Data input Add
STBD 25°	PORT 25°		(211)
STBD 12.5°	PORT 12.5°		(212)
0°	0°		(213)
PORT 12.5°	STBD 12.5°		(214)
PORT 25°	STBD 25°		(215)

(STERN)

5. Adjustment of blade angle signal output (terminal 110－111) (NOT USED)

(1) Change blade angle signal so that address "201" of ten key shows "STBD 25".
Adjust data of address "218" so that voltage of terminal No. 110-111 is 10.0±0.05V.
If a setting value is increased, voltage will go up.

(2) Change blade angle signal so that address "201" of ten key shows "0".
Adjust data of address "217" so that voltage of terminal No. 110-111 is 0.0±0.05V.
If a setting value is increased, voltage will go up.

(3) Change blade angle signal so that address "201" of ten key shows "PORT 25".
Adjust data of address "216" so that voltage of terminal No. 110-111 is -10.0±0.05V.
If a setting value is increased, voltage will go up.

5-1. Adjustment of pitch indicator (NOT USED)

(1) Change blade angle signal so that address "201" of ten key shows "0".
Adjust trimmer ZERO of Isolation Amplifier so that pitch indicated is "0".

(2) Change blade angle signal so that address "201" of ten key shows "STBD25".
Adjust trimmer SPAN of Isolation Amplifier so that pitch indicated is "STBD25".

6. Adjustment of load signal

6-1. Adjustment of load indicator

(1) The load current between the terminal stands 59-60 is set as 0A.
Adjust trimmer VR2(ZERO) of controller so that load indicated is "0".

(2) The load current between the terminal stands 59-60 is set as OLP value.
Adjust trimmer VR1(GAIN) of controller so that load indicated is "100".

6-2. Adjustment of load signal for OLP control.

(1) The load current between the terminal stands 55-58 is set as 1A.
Reading of an address "015" is inputted into the data of an address "101".

(2) The load current between the terminal stands 55-58 is set as 0.5A.
Reading of an address "015" is inputted into the data of an address "100".

(STERN)

Adjustment on Board

1. Blade angle transmitter
   a. Blade angle is set as "0."
   b. The voltage between the terminal numbers 2-3 is set as 7.5±0.3V.

      _____V

      (Please enforce the slack stop of a fixed screw certainly.)

2. Adjustment of blade angle transmitter

2-1. Make non follow up control condition

2-2. Under machine side control, press manual buttons provided on the solenoid valve in the hydraulic unit to set the following blade angles of propeller as correct as possible.

When carrying out the adjustment by oneself, the method in 2-3,2-4 is recommendable.

a. The value of an address "010" is read in a following blade angle position, and the value is inputted into the address shown to ( )

When ten keys 069 and 205 are -1	When ten keys 069 and 205 are 1	Value of Add"010"	Data input Add
STBD 25°	PORT 25°		(070)
STBD 12.5°	PORT 12.5°		(071)
0°	0°		(072)
PORT 12.5°	STBD 12.5°		(073)
PORT 25°	STBD 25°		(074)

b. The value of an address "200" is read in a following blade angle position, and the value is inputted into the address shown to ( )

When ten keys 069 and 205 are -1	When ten keys 069 and 205 are 1	Value of Add"200"	Data input Add
STBD 25°	PORT 25°		(211)
STBD 12.5°	PORT 12.5°		(212)
0°	0°		(213)
PORT 12.5°	STBD 12.5°		(214)
PORT 25°	STBD 25°		(215)

(STERN)

2-3. Make non follow up control condition

2-4. Under machine side control, press manual buttons provided on the solenoid valve in the hydraulic unit to set the following blade angles of propeller as correct as possible.

a. The output voltage of potentiometer is measured with the terminal 5-6 of blade angle transmitter in a following blade angle position.

b. Input the value into the address shown in ( ).

When ten keys 069 and 205 are -1	When ten keys 069 and 205 are 1	Voltage of terminal 5-6	Data input Add
STBD 25°	PORT 25°		(070)
STBD 12.5°	PORT 12.5°		(071)
0°	0°		(072)
PORT 12.5°	STBD 12.5°		(073)
PORT 25°	STBD 25°		(074)

a. The output voltage of potentiometer is measured with the terminal 2-3 of blade angle transmitter in a following blade angle position.

b. Input the value into the address shown in ( ).

When ten keys 069 and 205 are -1	When ten keys 069 and 205 are 1	Voltage of terminal 2-3	Data input Add
STBD 25°	PORT 25°		(211)
STBD 12.5°	PORT 12.5°		(212)
0°	0°		(213)
PORT 12.5°	STBD 12.5°		(214)
PORT 25°	STBD 25°		(215)

(STERN)

3. Detecting neutral signal

   Enter ± blade angle into address "067"and "206".

4. Setting maximum blade angle limitation

   Considering the hydraulic system, enter slightly lower values than calculated values in to the corresponding ten-key address and then check the actual blade angles at the local scale.

   a. PORT side ------ Enter maximum blade angle into address "066" and "209".
      Enter 1/2 value of address "209" into address "208"
   b. STBD side ------ Enter maximum blade angle into address "065" and "210".
      Enter 1/2 value of address "210" into address "207"

5. Setting dial matching zone of change over interlock

   Non-follow→Follow change over : Enter it into address "087".

6. Setting dead zone

   Solenoid valve OFF deviation : Enter it into address "080".
   Solenoid valve ON deviation : Enter it into address "081".

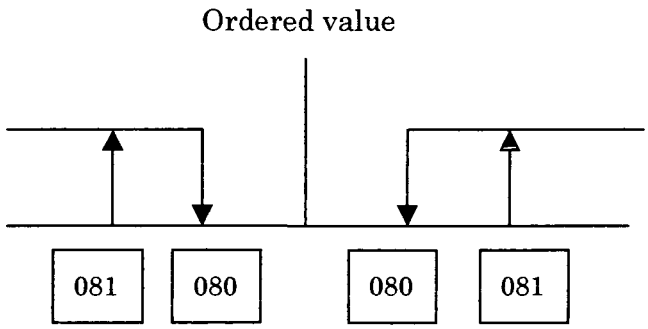

7. Setting blade angle at the time of reducing demand.

   Blade angle is reduced on the pre-set value at the time of reducing demand.

   However, it works only case of maneuvering dial order is higher than setting value.

   a. PORT side ------ Enter into address "085". (Input range –25～0 Deg)
   b. STBD side ------ Enter into address "086". (Input range 0～25 Deg)

   In case of no use this function, enter "-25" into address"085" and "25" into address"086".

   Moreover, in case of use auto zero pitch function, enter "0" into address "085" and "086".

(STERN)

8. Adjustment of blade angle signal output (terminal 110－111) (NOT USED)

(1) Change blade angle signal so that address "201" of ten key shows "STBD 25".
Adjust data of address "218" so that voltage of terminal No. 110-111 is 10.0±0.05V.
If a setting value is increased, voltage will go up.

(2) Change blade angle signal so that address "201" of ten key shows "0".
Adjust data of address "217" so that voltage of terminal No. 110-111 is 0.0±0.05V.
If a setting value is increased, voltage will go up.

(3) Change blade angle signal so that address "201" of ten key shows "PORT 25".
Adjust data of address "216" so that voltage of terminal No. 110-111 is -10.0±0.05V.
If a setting value is increased, voltage will go up.

8-1. Adjustment of pitch indicator (NOT USED)

(1) Change blade angle signal so that address "201" of ten key shows "0".
Adjust trimmer ZERO of Isolation Amplifier so that pitch indicated is "0".

(2) Change blade angle signal so that address "201" of ten key shows "STBD25".
Adjust trimmer SPAN of Isolation Amplifier so that pitch indicated is "STBD25".

(STERN)

9. Setting OLP control

OLP level: Address mA is inputted into "105" for an OLP value.

Formula:

(main motor rated current {A} / CT rated current {A}) x1000=OLP value {mA} = address "105"

Amount of Load deviations displayed address "018" (+ : Light load、— : Over load Unit %)

Amount of OLP control displayed address "023" (+ : Addition、— : Subtraction Unit Deg)

Order of blade angle displayed address "024" (+ : PORT order、— : STBD order Unit Deg)

Order of dial displayed address "014" (+ : PORT order、— : STBD order Unit Deg)

Proportionality : A proportionality value can be set up by the following table.

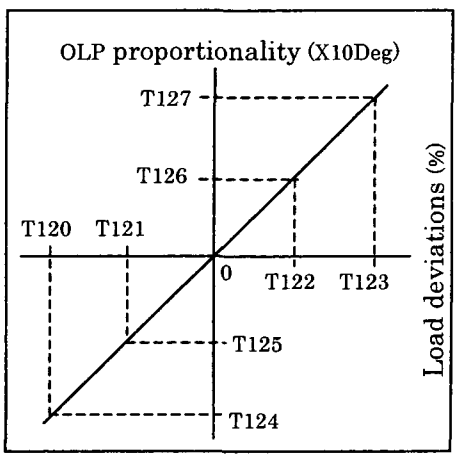

The standard value is as follows.

Load deviations (%)		OLP OLP proportionality (X10Deg)	
Address	Data	Address	Data
T120	-10	T124	-10
T121	-5	T125	-5
deviation 0	0	deviation 0	0
T122	5	T126	5
T123	10	T127	10

Setup of −1Deg is standard in 110% load.

OLP proportionality value is displayed in address "019" (+ : Addition、— : Subtraction Unit X10Deg)

Integration : A Integration value can be set up by the following table.

Load setup	Load				Blade angle moving speed		
	Detect address	Detect range	Unit	standard value	Setup address	Unit	Standard value
Over	—	0% or less	%	—	T118	X10deg/10Sec	20
Heavy	T112	T112～T111	%	0	T117	X10deg/10Sec	10
Middle	T111	T111～T110	%	10	T116	X10deg/10Sec	10
Light	T110	T110～T109	%	20	T115	X10deg/10Sec	20
Small	T109	T109 以上	%	20	T114	X10deg/10Sec	20

Blade angle moving speed of a standard value has set up 2points.

Blade angle moving speed can be set up to 4points maximum.

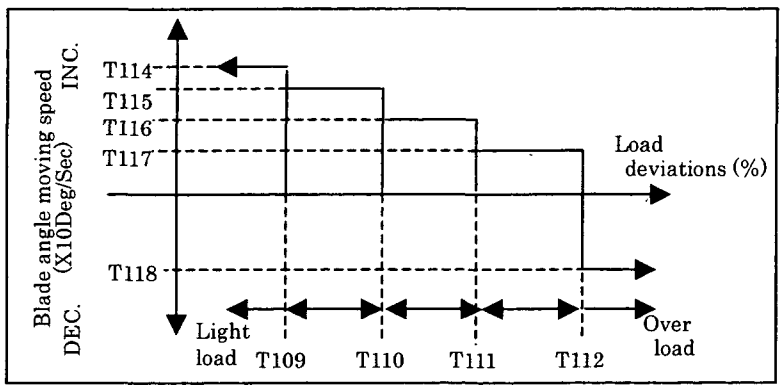

PORTABLE KEYPAD OPERATING MANUAL FOR MTHⅢ TYPE THRUSTER CONTROLLER

(74759070-01)

Nabtesco Corporation
MARINE CONTROL SYSTEMS COMPANY
ENGINEERING DEPT.

–	–	–	'04 04/19		–		
REV. MARK	NOTE		DATE	DESIGNED		CHK.	APVD.

ED

Engineering Dept.	Portable Keypad Operating Manual For MTHIII Type Thruster Controller	—
		74SS48882-01E

1. Outline

The MTHIII type thruster controller provides with a Portable Keypad shown in Figure 1 to set and check the stored data. When connecting this Portable Keypad, it can requires to prepare spacers (M 5) for fixing the panel depending on the controller's installation condition. These are included in the Spare Parts as standard.

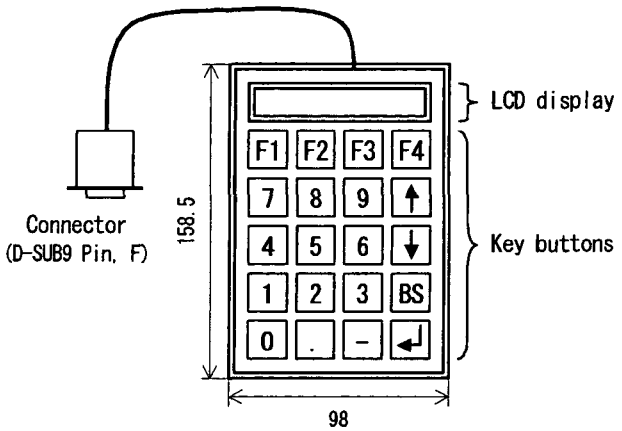

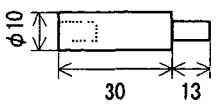

Spacer (74757581-13) x 4

Portable Keypad (74759070-01)x1

Figure 1. External View

2. Connecting Procedures

To connect the Portable Keypad, proceed as follows (see Figure 2):

【Step 1】
Turn the Thruster Controller off.

【Step 2】
Remove four decorative screws for mounting the Thruster Controller and then raise the panel.

【Step 3】
Replace the decorative screws with the spacers for fixing the panel, and then connect a connector with the connector CN4 provided on the BTC-302 Card (73757618-01). Then, attach the panel to the spacer using decorative screws. Or, insert the connector into the Thruster Controller body front's or side face's rectangle hole (30 x 50) and connect it to the connector CN4. Next, restore the panel using the decorative screws.

【Step 4】
Turn the Thruster Controller on to make it operatable.

【Step 5】
Turn the Thruster Controller off and then remove the connector.

【Step 6】
Restore the panel to the original condition.

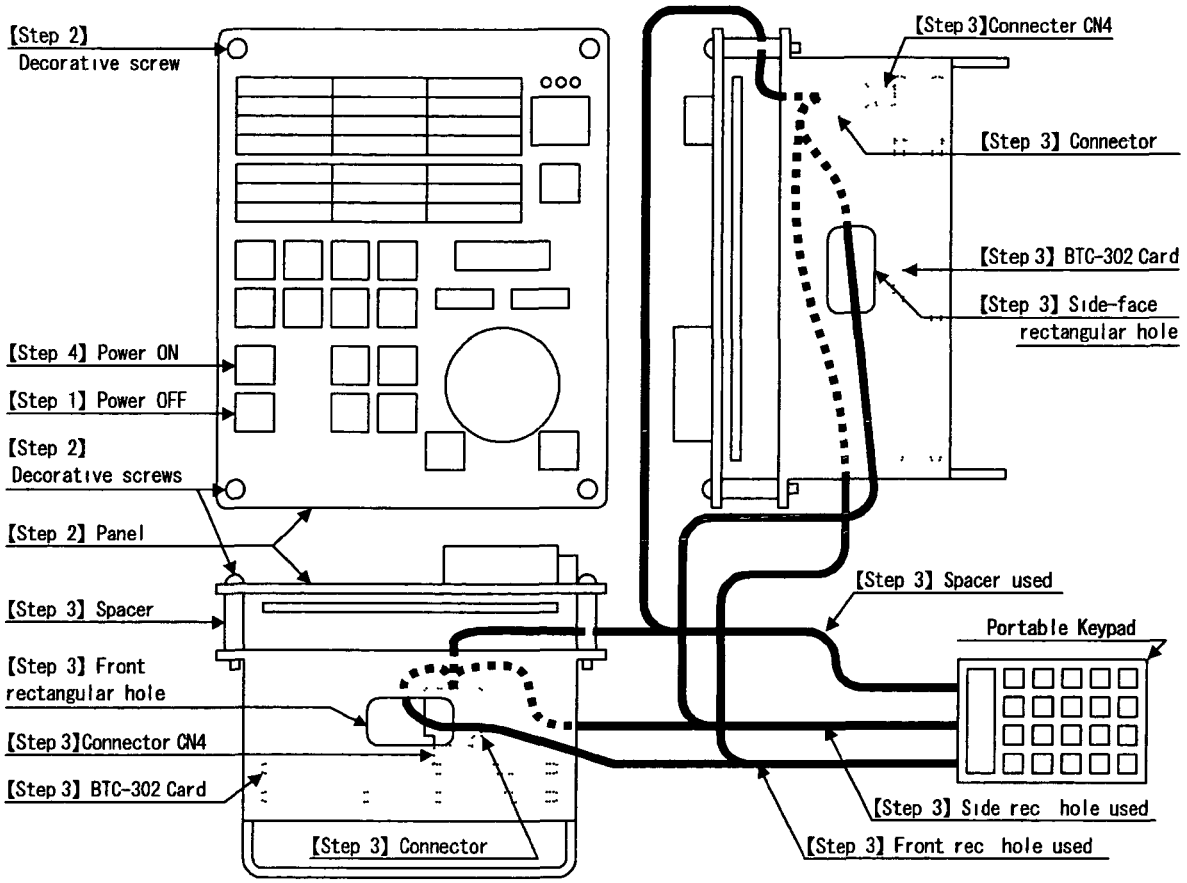

Figure 2. Connecting Method

ED

3. Operating Method

The LCD display consists of five displays such as the Address Attribute, Mode, Write Status, Address, and Data, which are shown in Figure 3 and Table 1.

The initial condition at a time when the power is supplied is as follows: the Mode is "R" (Read Mode), Write status is " " (Write Disable), and Address is "000".

	1st letter	2nd letter	3rd letter	4th letter	5th letter	6th letter	7th letter	8th letter	9th letter	10th letter	11th letter	12th letter	13th letter	14th letter	15th letter	16th letter
1st line	①	-	②		a	d	r	s				d	a	t	a	
2nd line	③	③			④	④	④			⑤	⑤	⑤	⑤	⑤	⑤	

Figure 3. LCD Display Format

Display		Indication	Description
①	Attribute	R	Shows it is an exclusive read-in address.
		W	Shows it is a writable address.
		P	Shows it is an address for entering passwords.
		-	Shows it is an unused address.
②	Mode	R	Shows it is Read mode.
		W	Show it is Write mode.
③	Write Status		Shows it is Write Disable.
		WE	Shows it is Writ Enable.
④	Address	xxx	Shows an address number.
⑤	Data	xxxxxx	Shows read-out data and entered data with right-adjusted. Shows "-" when the data value is minus. Shows "---" for unused address. Shows "v" at the top of data when it has overflowed.

Table 1. Details of LCD Indication

3-1. Designating an Address

There is two methods of designating an address:

【Method 1】

Designate an address directly by operating key buttons "0" - "9".
To directly destignate addresses 0 - 99, enter "000" - "099".

【Method 2】

Designate an address indirectly by operating key buttons " ↑ " (address increment) and " ↓ " (address decrement). It is convenient to designate serial addresses.

3-2. Readout of Data

To read out data, proceed as follows:

【Step 1】

Press key button "F1" (READ) to make the Read Mode effective. The Mode indication becomes "R" (Read Mode). This operation is not necessary except to stop entering data in the WRITE Mode.

【Step 2】

According to 3-1, designate a desired address to be read out. The data stored in the designated address is shown on the DATA display.

3-3. Changing the Write Status

The Write status consists of the Write Enable in which writing data is possible and the Write Disable in which writing is prohibited, whose selection can be done as follows:

【Step 1】

According to 3-1, designate address "199". The DATA display shows "Lock".

【Step 2】

Press key button "F2" (WRITE) to make the Write Mode effective. The MODE display shows "W" (Write Mode) and the DATA display blank.

【Step 3】

Press key buttons "0", "7", "2", "5", and "↵" to enter the password (0725). The Write Status display shows "WE" (Write Enable) and the data display "Unlock".
Since the four-letter inputs just before entering "↵" are recognized as a password input, try to enter the password again if you become uncertain of password input condition.

【Step 4】

When completing the write of a new address by repeating the Write actions in 3-4, carry out actions Steps 1 and 2 to enter a letter except the password (entering only "↵" is enough) to make the status Write Disable.

3-4. Writing Data

Writing data is possible only in the Write Enable condition and proceed as follows:

【Step 1】

According to 3-1, designate your desired data address.

【Step 2】

Press key button "F2" (WRITE) to make the Write Mode effective. The mode display shows "W" (Write Mode) and the data display blank. When the address' attribute is "R" (Read Only), "-" (Unused), or "W" (Write Enable) plus Write Disable, the Write Mode cannot be obtained.

【Step 3】

Enter a data by pressing key buttons "0"-"9", ".", and "-". The input possible data range is between -999 and 999. Then, the enter of "." is possible only when there is no "." indication on the DATA display and each time "-" is pressed, the data is added with " " and "-" to its top alternately. When key button "BS " is pressed, the inputted data is cleared.

【Step 4】

Press key button "↵ " to make the entered data fixed. The Mode Display turns to "R" (Read Mode) to make the entered data stored. However, if the inputted data exceeds the upper or lower limit, the data becomes ineffective and the previous data is shown.

【Step 5】

Repeat Steps 1-4 to enter your desired data.

Nabtesco

TENKEY DATA ADDRESS LIST
FOR
MTHⅢ TYPE
THRUSTER REMOTE CONTROL SYSTEM

(BOW THRUSTER)

SHIPYARD : HYUNDAI HEAVY INDUSTRIES CO., LTD.

S.NO. : H-1630

REVISION
1. NABTESCO SHOP TEST 2005.5.19
2.
3.
4.

READOUT OPERATION OF DATA

INPUT THE ADDRESS FOR THE DATA TO BE READ OUT WITH THE KEYBOARD, AND THE ADDRESS IS DISPLAY ON THE ADDRESS DISPLAY SECTION AND THE DATA ON THE DATA DISPLAY SECTION.

(BOW) FOR CONTROL

TENKEY ADDRESS	DESCRIPTION	UNIT	ADJUSTABLE RANGE		SETTING VALUE			
			LOWER	UPPER	1	2	3	4
000	W/H DIAL FG INPUT SIGNAL	Volt	—	—				
001	W/H DIAL FG OUTPUT SIGNAL	Deg	—	—				
002	PORTABLE DIAL FG INPUT SIGNAL	Volt	—	—				
003	PORTABLE DIAL FG OUTPUT SIGNAL	Deg	—	—				
004	STBD WING DIAL FG INPUT SIGNAL	Volt	—	—				
005	STBD WING DIAL FG OUTPUT SIGNAL	Deg	—	—				
006	PORT WING DIAL FG INPUT SIGNAL	Volt	—	—				
007	PORT WING DIAL FG OUTPUT SIGNAL	Deg	—	—				
008	KICS ORDER FG INPUT SIGNAL	Volt	—	—				
009	KICS ORDER FG OUTPUT SIGNAL	Deg	—	—				
010	FEEDBACK FG INPUT SIGNAL	Volt	—	—				
011	FEEDBACK FG OUTPUT SIGNAL	Deg	—	—				
012								
013	DIAL ORDER SIGNAL	Deg	—	—				
014	THRUSTER ORDER SIGNAL	Deg	—	—				
015	MOTOR LOAD FG INPUT SIGNAL	Volt	—	—				
016	MOTOR LOAD FG OUTPUT SIGNAL	mA	—	—				
017	MOTOR LOAD DEVIATION	mA	—	—				
018	MOTOR LOAD DEVIATION	%	—	—				
019	OLP PROPORTIONAL	10xDeg	—	—				
020	SCHEDULER INPUT	—	—	—				
021	SCHEDULER OUTPUT	10xDeg	—	—				
022	OLP VALUE	10xDeg	—	—				
023	OLP VALUE (BLADE ANGLE DECREASE)	Deg	—	—				
024	DEVIATION OF OLP-DIAL ORDER	Deg	—	—				
025	BLADE ANGLE DEVIATION	Deg	—	—				
026	BLADE ANGLE ORDER SIG FOR VDR	%	—	—				
027								
028								
029								
030	KICS SELECT 0:NOT USED 1:KICS	—	0	1	0			
031	CHANGE-OVER SELECT 0:PORTABLE 1:WING 2:W/H or DIRECT	—	0	2	1			
032	REQUEST SELECT 0:NOT USED 1:USED	—	0	1	1			
033	REQUEST STOP SELECT 0:M/M STOP 1:POW AVAIL	—	0	1	0			
034	THRUSTER NUMBER BOW: ODD STERN: EVN	—	0	10	1			
035	W/H DIAL ORDER SIGNAL 0: P-S 1: S-P	—	0	1	0			
036	STBD WING DIAL ORDER SIGNAL 0: P-S 1: S-P	—	0	1	0			
037	PORT WING DIAL ORDER SIGNAL 0: P-S 1: S-P	—	0	1	0			
038								
039								
040								
041								
042								
043								
044								
045								
046								
047								
048								
049								

(BOW) FOR CONTROL

TENKEY ADDRESS	DESCRIPTION	UNIT	ADJUSTABLE RANGE		SETTING VALUE			
			LOWER	UPPER	1	2	3	4
050	W/H DIAL FG INPUT 1	Volt	0	10	1.08			
051	W/H DIAL FG INPUT 2	Volt	0	10	5			
052	W/H DIAL FG INPUT 3	Volt	0	10	8.91			
053	PORTABLE DIAL FG INPUT 1	Volt	0	10	1			
054	PORTABLE DIAL FG INPUT 2	Volt	0	10	5			
055	PORTABLE DIAL FG INPUT 3	Volt	0	10	9			
056	STBD WING DIAL FG INPUT 1	Volt	0	10	1.09			
057	STBD WING DIAL FG INPUT 2	Volt	0	10	5.01			
058	STBD WING DIAL FG INPUT 3	Volt	0	10	8.9			
059	PORT WING DIAL FG INPUT 1	Volt	0	10	1.08			
060	PORT WING DIAL FG INPUT 2	Volt	0	10	5.01			
061	PORT WING DIAL FG INPUT 3	Volt	0	10	8.89			
062	KICS ORDER FG INPUT 1	Volt	-10	10	-10			
063	KICS ORDER FG INPUT 2	Volt	-10	10	0			
064	KICS ORDER FG INPUT 3	Volt	-10	10	10			
065	STBD MAX LIMIT	Deg	10	25	25			
066	PORT MAX LIMIT	Deg	-25	-10	-25			
067	NEUTRAL LEVEL	Deg	0	10	3			
068								
069	POLER CHANGE OF BLADE ANGLE FEEDEBACK	—	-1	1	1			
070	BLADE ANGLE FEEDBACK FG INPUT 1	Volt	0	15	2.02			
071	BLADE ANGLE FEEDBACK FG INPUT 2	Volt	0	15	4.72			
072	BLADE ANGLE FEEDBACK FG INPUT 3	Volt	0	15	7.47			
073	BLADE ANGLE FEEDBACK FG INPUT 4	Volt	0	15	10.2			
074	BLADE ANGLE FEEDBACK FG INPUT 5	Volt	0	15	12.9			
075								
076								
077	STBD MAX SET AT DPS & JOY ORDER	Deg	0	25	25			
078	PORT MAX SET AT DPS & JOY ORDER	Deg	-25	0	-25			
079								
080	DEAD ZONE	Deg	0	5	0.5			
081	DEAD ZONE (SETTLED)	Deg	0	5	0.5			
082								
083								
084								
085	PITCH REDUCE LEVEL OF PORT SIDE	Deg	-25	0	0			
086	PITCH REDUCE LEVEL OF STBD SIDE	Deg	0	25	0			
087	DIAL MATCH ZONE	Deg	0	10	1			
088								
089								
090	W/H DIAL DISCONNECTION DETECT LEVEL (UPPER)	Volt	0	10	9.2			
091	W/H DIAL DISCONNECTION DETECT LEVEL (LOWER)	Volt	0	5	0.5			
092	PORTABLE DIAL DISCONNECTION DETECT LEVEL (UPPER)	Volt	0	10	9.2			
093	PORTABLE DIAL DISCONNECTION DETECT LEVEL (LOWER)	Volt	0	5	0.5			
094	STBD DIAL DISCONNECTION DETECT LEVEL (UPPER)	Volt	0	10	9.2			
095	STBD DIAL DISCONNECTION DETECT LEVEL (LOWER)	Volt	0	5	0.5			
096	PORT DIAL DISCONNECTION DETECT LEVEL (UPPER)	Volt	0	10	9.2			
097	PORT DIAL DISCONNECTION DETECT LEVEL (LOWER)	Volt	0	5	0.5			
098	FEED BACK DISCONNECTION DETECT LEVEL (UPPER)	Volt	0	13.5	13.5			
099	FEED BACK DISCONNECTION DETECT LEVEL (LOWER)	Volt	0	5	1			

(BOW) FOR CONTROL

TENKEY ADDRESS	DESCRIPTION	UNIT	ADJUSTABLE RANGE		SETTING VALUE			
			LOWER	UPPER	1	2	3	4
100	MOTOR LOAD FG1 INPUT	Volt	0	15	4.93			
101	MOTOR LOAD FG2 INPUT	Volt	0	15	9.88			
102	MOTOR LOAD FG1 OUTPUT	mA	0	999	500			
103	MOTOR LOAD FG2 OUTPUT	mA	0	999	999			
104								
105	MOTOR LOAD OVER LOAD LEVEL	mA	0	999	710			
106	MOTOR RUN CONFIRM TIMER	Sec	0	60	10			
107								
108	SCHEDULER LAST TARGET VALUE	—	0	999	100			
109	SCHEDULER CONVERT RATIO CHANGEOVER POINT 1	%	-100	100	20			
110	SCHEDULER CONVERT RATIO CHANGEOVER POINT 2	%	-100	100	20			
111	SCHEDULER CONVERT RATIO CHANGEOVER POINT 3	%	-100	100	10			
112	SCHEDULER CONVERT RATIO CHANGEOVER POINT 4	%	-100	100	0			
113								
114	SCHEDULER INTEGRAL FIXED VALUE 1	(10xDeg/10Sec)	0	999	20			
115	SCHEDULER INTEGRAL FIXED VALUE 2	(10xDeg/10Sec)	0	999	20			
116	SCHEDULER INTEGRAL FIXED VALUE 3	(10xDeg/10Sec)	0	999	10			
117	SCHEDULER INTEGRAL FIXED VALUE 4	(10xDeg/10Sec)	0	999	10			
118	SCHEDULER INTEGRAL FIXED VALUE 5	(10xDeg/10Sec)	0	999	20			
119								
120	OLP PROPORTIONAL VALUE INPUT 1	%	-999	999	-10			
121	OLP PROPORTIONAL VALUE INPUT 2	%	-999	999	-5			
122	OLP PROPORTIONAL VALUE INPUT 3	%	-999	999	5			
123	OLP PROPORTIONAL VALUE INPUT 4	%	-999	999	10			
124	OLP PROPORTIONAL VALUE OUTPUT 1	10xDeg	-999	999	-10			
125	OLP PROPORTIONAL VALUE OUTPUT 2	10xDeg	-999	999	-5			
126	OLP PROPORTIONAL VALUE OUTPUT 3	10xDeg	-999	999	5			
127	OLP PROPORTIONAL VALUE OUTPUT 4	10xDeg	-999	999	10			
128								
129								
130								
131								
132								
133								
134								
135								
136								
137								
138								
139								
140								
141								
142								
143								
144								
145								
146								
147								
148								
149								

(BOW) FOR MONITOR

TENKEY ADDRESS	DESCRIPTION	UNIT	ADJUSTABLE RANGE		SETTING VALUE			
			LOWER	UPPER	1	2	3	4
200	BLADE ANGLE INPUT SIGNAL	Volt	—	—	—			
201	BLADE ANGLE	Deg	—	—	—			
202	BLADE ANGLE OUTPUT VOLT SIGNAL	Volt	—	—	—			
203	BLADE ANGLE OUTPUT INDICATOR SIGNAL	Notch	—	—	—			
204	BLADE ANGLE OUTPUT VDR SIGNAL	%	—	—	—			
205	POLER CHANGE OF BLADE ANGLE FEEDEBACK	—	-1	1	1			
206	BLADE ANGLE NEUTRAL LEVEL	Deg	0	10	3			
207	BLADE ANGLE STBD MAX/2 POINT	Deg	0	25	12.5			
208	BLADE ANGLE PORT MAX/2 POINT	Deg	-25	0	-12.5			
209	BLADE ANGLE PORT MAX	Deg	-25	-10	-25			
210	BLADE ANGLE STBD MAX	Deg	10	25	25			
211	BLADE ANGLE SIGNAL FG INPUT 1	Volt	0	15	1.99			
212	BLADE ANGLE SIGNAL FG INPUT 2	Volt	0	15	4.7			
213	BLADE ANGLE SIGNAL FG INPUT 3	Volt	0	15	7.43			
214	BLADE ANGLE SIGNAL FG INPUT 4	Volt	0	15	10.1			
215	BLADE ANGLE SIGNAL FG INPUT 5	Volt	0	15	12.8			
216	BLADE ANGLE SIGNAL FG OUTPUT 1 FOR INDICATOR	Volt	-15	15	-9.9			
217	BLADE ANGLE SIGNAL FG OUTPUT 2 FOR INDICATOR	Volt	-15	15	0.05			
218	BLADE ANGLE SIGNAL FG OUTPUT 3 FOR INDICATOR	Volt	-15	15	9.9			
219								
220	ALARM 3 SELECT 0:USE 1:NOTUSE	—	0	1	0			
221	ALARM 4 SELECT 0:USE 1:NOTUSE	—	0	1	0			
222	ALARM 5 SELECT 0:USE 1:NOTUSE	—	0	1	0			
223	ALARM 6 SELECT 0.USE 1:NOTUSE	—	0	1	0			
224	ALARM 7 SELECT 0:USE 1:NOTUSE	—	0	1	0			
225	ALARM 8 SELECT 0:USE 1:NOTUSE	—	0	1	0			
226	ALARM 9 SELECT 0:USE 1:NOTUSE	—	0	1	0			
227	ALARM 10 SELECT 0:USE 1:NOTUSE	—	0	1	0			
228	ALARM 11 SELECT 0:USE 1:NOTUSE	—	0	1	1			
229	ALARM 11 MODE SELECT 0:ALARM LAMP 1:AUTO PITCH REDUCT	—	0	1	1			
230	ALARM 3 TIMER SET	Sec	0	60	0			
231	ALARM 4 TIMER SET	Sec	0	60	0			
232	ALARM 5 TIMER SET	Sec	0	60	0			
233	ALARM 6 TIMER SET	Sec	0	60	0			
234	ALARM 7 TIMER SET	Sec	0	60	0			
235	ALARM 8 TIMER SET	Sec	0	60	0			
236	ALARM 9 TIMER SET	Sec	0	60	0			
237	ALARM 10 TIMER SET	Sec	0	60	0			
238	ALARM 11 TIMER SET	Sec	0	60	0			
239	REDUCT PATTERN SELECT 0:OTHER 1:AUTO ZERO PITCH(L9)	—	0	1	0			
240	ALARM STOP PATTERN SELECT 0:NORMAL 1.2STEP	—	0	1	0			
241	WING THRUSTER RUN IND. SELECT 0:NEED LESS 1:NEED	—	0	1	1			
242	HYSTERESISS	Deg	-5	5	0.1			
243								
244								
245	D.OUT SELECT 0:NOT USED 1:CONT. POSI 2 NEUTRAL	—	0	2	0			
246								
247								
248	FEED BACK DISCONNECTION DETECT LEVEL (UPPER)	Volt	0	13.5	13.5			
249	FEED BACK DISCONNECTION DETECT LEVEL (LOWER)	Volt	0	5	1			

(BOW) FOR MONITOR

TENKEY ADDRESS	DESCRIPTION	UNIT	ADJUSTABLE RANGE		SETTING VALUE			
			LOWER	UPPER	1	2	3	4
250	W/H PITCH IND -1: S-P 1: P-S	—	-1	1	1			
251	STBD WING PITCH IND -1: S-P 1: P-S	—	-1	1	1			
252	PORT WINGPITCH IND -1: S-P 1: P-S	—	-1	1	1			
253								
254								
255								
256								
257								
258								
259								
260								
261								
262								
263								
264								
265								
266								
267								
268								
269								
270								
271								
272								
273								
274								
275								
276								
277								
278								
279								
280								
281								
282								
283								
284								
285								
286								
287								
288								
289								
290								
291								
292								
293								
294								
295								
296								
297								
298								
299								

Nabtesco

TENKEY DATA ADDRESS LIST
FOR
MTHⅢ TYPE
THRUSTER REMOTE CONTROL SYSTEM
(STERN THRUSTER)

SHIPYARD : HYUNDAI HEAVY INDUSTRIES CO., LTD.

S.NO. : H-1630

REVISION
1. NABTESCO SHOP TEST 2005.5.19
2.
3.
4.

READOUT OPERATION OF DATA

INPUT THE ADDRESS FOR THE DATA TO BE READ OUT WITH THE KEYBOARD, AND THE ADDRESS IS DISPLAY ON THE ADDRESS DISPLAY SECTION AND THE DATA ON THE DATA DISPLAY SECTION.

(STERN) FOR CONTROL

TENKEY ADDRESS	DESCRIPTION	UNIT	ADJUSTABLE RANGE		SETTING VALUE			
			LOWER	UPPER	1	2	3	4
000	W/H DIAL FG INPUT SIGNAL	Volt	—	—				
001	W/H DIAL FG OUTPUT SIGNAL	Deg	—	—				
002	PORTABLE DIAL FG INPUT SIGNAL	Volt	—	—				
003	PORTABLE DIAL FG OUTPUT SIGNAL	Deg	—	—				
004	STBD WING DIAL FG INPUT SIGNAL	Volt	—	—				
005	STBD WING DIAL FG OUTPUT SIGNAL	Deg	—	—				
006	PORT WING DIAL FG INPUT SIGNAL	Volt	—	—				
007	PORT WING DIAL FG OUTPUT SIGNAL	Deg	—	—				
008	KICS ORDER FG INPUT SIGNAL	Volt	—	—				
009	KICS ORDER FG OUTPUT SIGNAL	Deg	—	—				
010	FEEDBACK FG INPUT SIGNAL	Volt	—	—				
011	FEEDBACK FG OUTPUT SIGNAL	Deg	—	—				
012								
013	DIAL ORDER SIGNAL	Deg	—	—				
014	THRUSTER ORDER SIGNAL	Deg	—	—				
015	MOTOR LOAD FG INPUT SIGNAL	Volt	—	—				
016	MOTOR LOAD FG OUTPUT SIGNAL	mA	—	—				
017	MOTOR LOAD DEVIATION	mA	—	—				
018	MOTOR LOAD DEVIATION	%	—	—				
019	OLP PROPORTIONAL	10xDeg	—	—				
020	SCHEDULER INPUT	—	—	—				
021	SCHEDULER OUTPUT	10xDeg	—	—				
022	OLP VALUE	10xDeg	—	—				
023	OLP VALUE (BLADE ANGLE DECREASE)	Deg	—	—				
024	DEVIATION OF OLP-DIAL ORDER	Deg	—	—				
025	BLADE ANGLE DEVIATION	Deg	—	—				
026	BLADE ANGLE ORDER SIG FOR VDR	%	—	—				
027								
028								
029								
030	KICS SELECT 0:NOT USED 1:KICS	—	0	1	0			
031	CHANGE-OVER SELECT 0:PORTABLE 1:WING 2:W/H or DIRECT	—	0	2	1			
032	REQUEST SELECT 0:NOT USED 1:USED	—	0	1	1			
033	REQUEST STOP SELECT 0:M/M STOP 1:POW AVAIL	—	0	1	0			
034	THRUSTER NUMBER BOW: ODD STERN: EVN	—	0	10	2			
035	W/H DIAL ORDER SIGNAL 0: P-S 1: S-P	—	0	1	1			
036	STBD WING DIAL ORDER SIGNAL 0: P-S 1: S-P	—	0	1	1			
037	PORT WING DIAL ORDER SIGNAL 0: P-S 1: S-P	—	0	1	1			
038								
039								
040								
041								
042								
043								
044								
045								
046								
047								
048								
049								

(STERN) FOR CONTROL

TENKEY ADDRESS	DESCRIPTION	UNIT	ADJUSTABLE RANGE		SETTING VALUE			
			LOWER	UPPER	1	2	3	4
050	W/H DIAL FG INPUT 1	Volt	0	10	1.08			
051	W/H DIAL FG INPUT 2	Volt	0	10	5.02			
052	W/H DIAL FG INPUT 3	Volt	0	10	8.94			
053	PORTABLE DIAL FG INPUT 1	Volt	0	10	1			
054	PORTABLE DIAL FG INPUT 2	Volt	0	10	5			
055	PORTABLE DIAL FG INPUT 3	Volt	0	10	9			
056	STBD WING DIAL FG INPUT 1	Volt	0	10	1.08			
057	STBD WING DIAL FG INPUT 2	Volt	0	10	5.01			
058	STBD WING DIAL FG INPUT 3	Volt	0	10	8.94			
059	PORT WING DIAL FG INPUT 1	Volt	0	10	1.09			
060	PORT WING DIAL FG INPUT 2	Volt	0	10	5.01			
061	PORT WING DIAL FG INPUT 3	Volt	0	10	8.94			
062	KICS ORDER FG INPUT 1	Volt	-10	10	-10			
063	KICS ORDER FG INPUT 2	Volt	-10	10	0			
064	KICS ORDER FG INPUT 3	Volt	-10	10	10			
065	STBD MAX LIMIT	Deg	10	25	25			
066	PORT MAX LIMIT	Deg	-25	-10	-25			
067	NEUTRAL LEVEL	Deg	0	10	3			
068								
069	POLER CHANGE OF BLADE ANGLE FEEDEBACK	—	-1	1	1			
070	BLADE ANGLE FEEDBACK FG INPUT 1	Volt	0	15	2.06			
071	BLADE ANGLE FEEDBACK FG INPUT 2	Volt	0	15	4.86			
072	BLADE ANGLE FEEDBACK FG INPUT 3	Volt	0	15	7.63			
073	BLADE ANGLE FEEDBACK FG INPUT 4	Volt	0	15	10.4			
074	BLADE ANGLE FEEDBACK FG INPUT 5	Volt	0	15	13.2			
075								
076								
077	STBD MAX SET AT DPS & JOY ORDER	Deg	0	25	25			
078	PORT MAX SET AT DPS & JOY ORDER	Deg	-25	0	-25			
079								
080	DEAD ZONE	Deg	0	5	0.5			
081	DEAD ZONE (SETTLED)	Deg	0	5	0.5			
082								
083								
084								
085	PITCH REDUCE LEVEL OF PORT SIDE	Deg	-25	0	0			
086	PITCH REDUCE LEVEL OF STBD SIDE	Deg	0	25	0			
087	DIAL MATCH ZONE	Deg	0	10	1			
088								
089								
090	W/H DIAL DISCONNECTION DETECT LEVEL (UPPER)	Volt	0	10	9.2			
091	W/H DIAL DISCONNECTION DETECT LEVEL (LOWER)	Volt	0	5	0.5			
092	PORTABLE DIAL DISCONNECTION DETECT LEVEL (UPPER)	Volt	0	10	9.2			
093	PORTABLE DIAL DISCONNECTION DETECT LEVEL (LOWER)	Volt	0	5	0.5			
094	STBD DIAL DISCONNECTION DETECT LEVEL (UPPER)	Volt	0	10	9.2			
095	STBD DIAL DISCONNECTION DETECT LEVEL (LOWER)	Volt	0	5	0.5			
096	PORT DIAL DISCONNECTION DETECT LEVEL (UPPER)	Volt	0	10	9.2			
097	PORT DIAL DISCONNECTION DETECT LEVEL (LOWER)	Volt	0	5	0.5			
098	FEED BACK DISCONNECTION DETECT LEVEL (UPPER)	Volt	0	13.5	13.5			
099	FEED BACK DISCONNECTION DETECT LEVEL (LOWER)	Volt	0	5	1			

(STERN) FOR CONTROL

TENKEY ADDRESS	DESCRIPTION	UNIT	ADJUSTABLE RANGE		SETTING VALUE			
			LOWER	UPPER	1	2	3	4
100	MOTOR LOAD FG1 INPUT	Volt	0	15	4 99			
101	MOTOR LOAD FG2 INPUT	Volt	0	15	10			
102	MOTOR LOAD FG1 OUTPUT	mA	0	999	500			
103	MOTOR LOAD FG2 OUTPUT	mA	0	999	999			
104								
105	MOTOR LOAD OVER LOAD LEVEL	mA	0	999	662			
106	MOTOR RUN CONFIRM TIMER	Sec	0	60	10			
107								
108	SCHEDULER LAST TARGET VALUE	—	0	999	100			
109	SCHEDULER CONVERT RATIO CHANGEOVER POINT 1	%	-100	100	20			
110	SCHEDULER CONVERT RATIO CHANGEOVER POINT 2	%	-100	100	20			
111	SCHEDULER CONVERT RATIO CHANGEOVER POINT 3	%	-100	100	10			
112	SCHEDULER CONVERT RATIO CHANGEOVER POINT 4	%	-100	100	0			
113								
114	SCHEDULER INTEGRAL FIXED VALUE 1	(10xDeg/10Sec)	0	999	20			
115	SCHEDULER INTEGRAL FIXED VALUE 2	(10xDeg/10Sec)	0	999	20			
116	SCHEDULER INTEGRAL FIXED VALUE 3	(10xDeg/10Sec)	0	999	10			
117	SCHEDULER INTEGRAL FIXED VALUE 4	(10xDeg/10Sec)	0	999	10			
118	SCHEDULER INTEGRAL FIXED VALUE 5	(10xDeg/10Sec)	0	999	20			
119								
120	OLP PROPORTIONAL VALUE INPUT 1	%	-999	999	-10			
121	OLP PROPORTIONAL VALUE INPUT 2	%	-999	999	-5			
122	OLP PROPORTIONAL VALUE INPUT 3	%	-999	999	5			
123	OLP PROPORTIONAL VALUE INPUT 4	%	-999	999	10			
124	OLP PROPORTIONAL VALUE OUTPUT 1	10xDeg	-999	999	-10			
125	OLP PROPORTIONAL VALUE OUTPUT 2	10xDeg	-999	999	-5			
126	OLP PROPORTIONAL VALUE OUTPUT 3	10xDeg	-999	999	5			
127	OLP PROPORTIONAL VALUE OUTPUT 4	10xDeg	-999	999	10			
128								
129								
130								
131								
132								
133								
134								
135								
136								
137								
138								
139								
140								
141								
142								
143								
144								
145								
146								
147								
148								
149								

(STERN) FOR MONITOR

TENKEY ADDRESS	DESCRIPTION	UNIT	ADJUSTABLE RANGE		SETTING VALUE			
			LOWER	UPPER	1	2	3	4
200	BLADE ANGLE INPUT SIGNAL	Volt	—	—	—			
201	BLADE ANGLE	Deg	—	—	—			
202	BLADE ANGLE OUTPUT VOLT SIGNAL	Volt	—	—	—			
203	BLADE ANGLE OUTPUT INDICATOR SIGNAL	Notch	—	—	—			
204	BLADE ANGLE OUTPUT VDR SIGNAL	%	—	—	—			
205	POLER CHANGE OF BLADE ANGLE FEEDEBACK	—	-1	1	1			
206	BLADE ANGLE NEUTRAL LEVEL	Deg	0	10	3			
207	BLADE ANGLE STBD MAX/2 POINT	Deg	0	25	12.5			
208	BLADE ANGLE PORT MAX/2 POINT	Deg	-25	0	-12.5			
209	BLADE ANGLE PORT MAX	Deg	-25	-10	-25			
210	BLADE ANGLE STBD MAX	Deg	10	25	25			
211	BLADE ANGLE SIGNAL FG INPUT 1	Volt	0	15	1.9			
212	BLADE ANGLE SIGNAL FG INPUT 2	Volt	0	15	4.68			
213	BLADE ANGLE SIGNAL FG INPUT 3	Volt	0	15	7.47			
214	BLADE ANGLE SIGNAL FG INPUT 4	Volt	0	15	10.2			
215	BLADE ANGLE SIGNAL FG INPUT 5	Volt	0	15	13			
216	BLADE ANGLE SIGNAL FG OUTPUT 1 FOR INDICATOR	Volt	-15	15	-10			
217	BLADE ANGLE SIGNAL FG OUTPUT 2 FOR INDICATOR	Volt	-15	15	0.05			
218	BLADE ANGLE SIGNAL FG OUTPUT 3 FOR INDICATOR	Volt	-15	15	10.1			
219								
220	ALARM 3 SELECT 0:USE 1:NOTUSE	—	0	1	0			
221	ALARM 4 SELECT 0:USE 1:NOTUSE	—	0	1	0			
222	ALARM 5 SELECT 0:USE 1:NOTUSE	—	0	1	0			
223	ALARM 6 SELECT 0:USE 1:NOTUSE	—	0	1	0			
224	ALARM 7 SELECT 0:USE 1:NOTUSE	—	0	1	0			
225	ALARM 8 SELECT 0:USE 1:NOTUSE	—	0	1	0			
226	ALARM 9 SELECT 0:USE 1:NOTUSE	—	0	1	1			
227	ALARM 10 SELECT 0:USE 1:NOTUSE	—	0	1	0			
228	ALARM 11 SELECT 0:USE 1:NOTUSE	—	0	1	1			
229	ALARM 11 MODE SELECT 0:ALARM LAMP 1:AUTO PITCH REDUCT	—	0	1	1			
230	ALARM 3 TIMER SET	Sec	0	60	0			
231	ALARM 4 TIMER SET	Sec	0	60	0			
232	ALARM 5 TIMER SET	Sec	0	60	0			
233	ALARM 6 TIMER SET	Sec	0	60	0			
234	ALARM 7 TIMER SET	Sec	0	60	0			
235	ALARM 8 TIMER SET	Sec	0	60	0			
236	ALARM 9 TIMER SET	Sec	0	60	0			
237	ALARM 10 TIMER SET	Sec	0	60	0			
238	ALARM 11 TIMER SET	Sec	0	60	0			
239	REDUCT PATTERN SELECT 0:OTHER 1:AUTO ZERO PITCH(L9)	—	0	1	0			
240	ALARM STOP PATTERN SELECT 0:NORMAL 1:2STEP	—	0	1	0			
241	WING THRUSTER RUN IND. SELECT 0:NEED LESS 1:NEED	—	0	1	1			
242	HYSTERESISS	Deg	-5	5	0.1			
243								
244								
245	D.OUT SELECT 0:NOT USED 1:CONT. POSI. 2:NEUTRAL	—	0	2	0			
246								
247								
248	FEED BACK DISCONNECTION DETECT LEVEL (UPPER)	Volt	0	13.5	13.5			
249	FEED BACK DISCONNECTION DETECT LEVEL (LOWER)	Volt	0	5	1			

(STERN) FOR MONITOR

TENKEY ADDRESS	DESCRIPTION	UNIT	ADJUSTABLE RANGE		SETTING VALUE			
			LOWER	UPPER	1	2	3	4
250	W/H PITCH IND -1: S-P 1: P-S	—	-1	1	1			
251	STBD WING PITCH IND -1: S-P 1: P-S	—	-1	1	1			
252	PORT WINGPITCH IND -1: S-P 1: P-S	—	-1	1	1			
253								
254								
255								
256								
257								
258								
259								
260								
261								
262								
263								
264								
265								
266								
267								
268								
269								
270								
271								
272								
273								
274								
275								
276								
277								
278								
279								
280								
281								
282								
283								
284								
285								
286								
287								
288								
289								
290								
291								
292								
293								
294								
295								
296								
297								
298								
299								

MTHⅢ TYPE THRUSTER CONTROLLER
OPERATION CHECK LEDS SPECIFICATIONS

Nabtesco Corporation
MARINE CONTROL SYSTEMS COMPANY
ENGINEERING DEPT.

–	–	–	'04 04/20		–		
REV. MARK	NOTE		DATE	DESIGNED		CHK.	APVD.

ED

Engineering Dept	MTHⅢ Type Thruster Controller Operating Check LEDs Specifications	—
		74SS48900-01E

ON the MTHⅢ Type Thruster Controller, Tables 1 - 3 show the details on operation check LEDs provided on the W/H Panel and Terminal Board Unit shown in Figure 1 below. However, these details of indication can change according to the setting of rotary switches on the BTC-302 Card. After the completion of check, return to the normal position

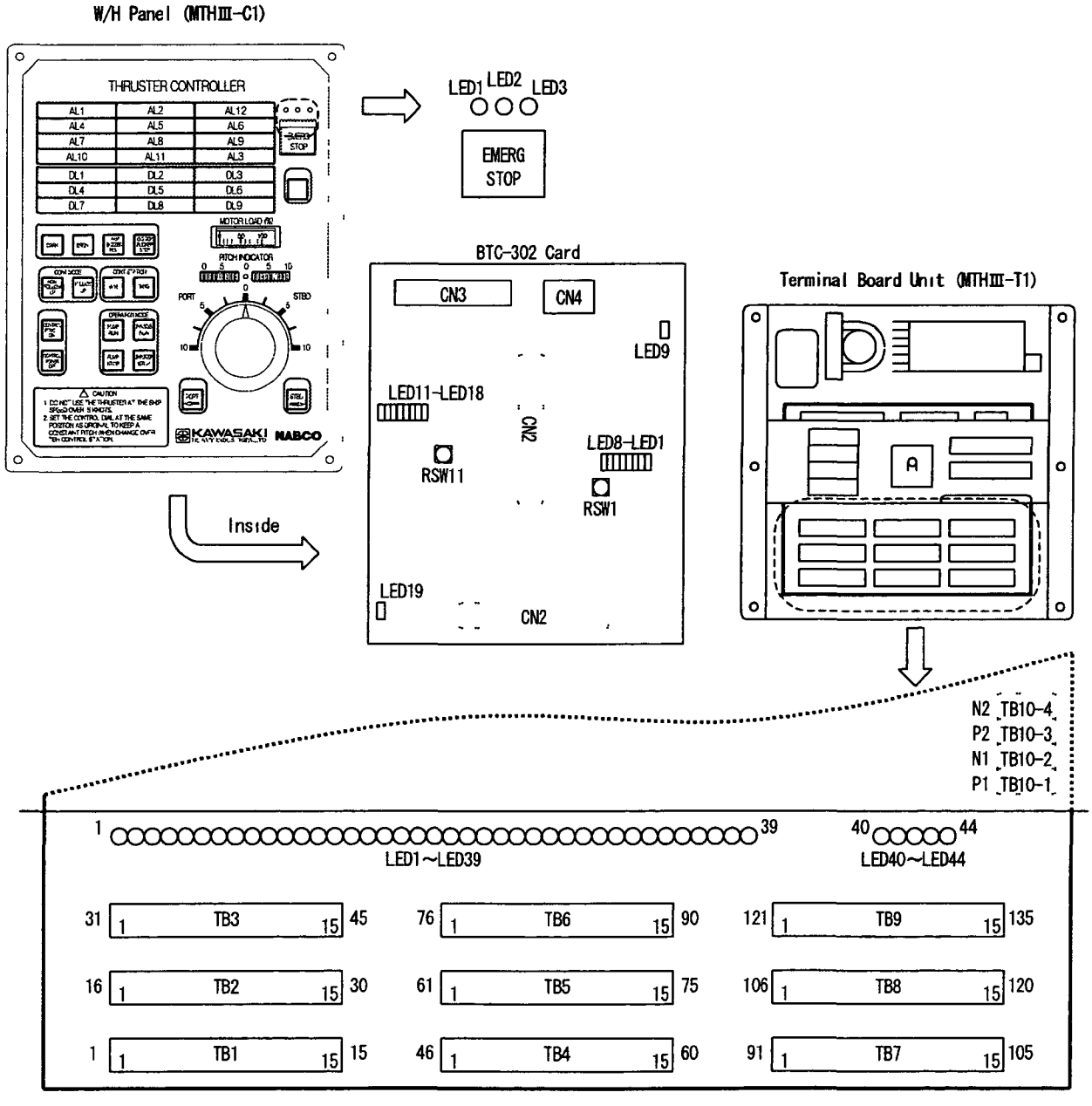

Figure 1 LED Location

ED

Engineering Dept.	MTHⅢ Type Thruster Controller Operating Check LEDs Specifications	—
		74SS48900-01E

【Table 1. Check LEDs on W/H Panel】

LED	Lights Up When:	Remarks
LED1	Blade Angle Transmitter signal fails.	Flickers when monitor blade angle transmitter signal fails.
LED2	Control Dial signal fails.	W/H, Wing, Portable
LED3	CPU, communication	

【Table 2. Check LEDs Inside W/H Panel】

LED	RSW Set.		Lights Up When:	Remarks
LED9	-		Control CPU fails.	ABN_C
LED1-LED8	RSW1	8	Control software version.	Hexadecimal indication
		9	Goes off normally.	
		A	VDR receiving fails (self-transmission)	Short-circuits TBU terminals 106-108, 107-109.
		B	CAN communication fails.	Control → Monitor
		C	CAN communication fails.	Monitor → Control
		D	VDR transmission fails.	
		E	Portable keypad communication fails.	
		F	Control AD conversion fails.	LED1: Motor load signal
				LED2: Control blade angle transmitter signal
				LED3: W/H dial signal
				LED4: KICS order signal
				LED5: Portable dial signal
				LED6: STBD Wing dial signal
				LED7: Port Wing dial signal
LED19	-		Monitor CPU fails.	ABN_M
LED11-LED18	RSW11	8	Monitor software version.	Hexadecimal indication
		9	Port Wing communication driver version	Hexadecimal indication
		A	STBD Wing communication driver version	Hexadecimal indication
		B	CAN communication fails.	Monitor → Control
		C	CAN communication fails.	Control → Monitor
		D	Port Wing communication fails.	
		E	STBD Wing communication fails.	
		F	Monitor AD conversion fails.	LED 13: Monitor blade angle transmitter signal

ED

Engineering Dept.	MTHⅢ Type Thruster Controller Operating Check LEDs Specifications	—
		74SS48900-01E

【Table 3. Check LEDs on Terminal Board Unit】

LED	Terminal Board No.	LED ON	LED OFF	Remarks	
LED1	1- 2	Closed	Open	Output	MAIN MOTOR RUN
LED2	3- 4	Open	Closed	Output	MAIN MOTOR STOP
	3- 5	Closed	Open		
LED3	6- 7	Closed	Open	Output	PITCH NEUTRAL
LED4	8- 9	Closed	Open	Output	POWER REQUEST(OPTION)
LED5	10- 11	Closed	Open	Output	FAN RUN(OPTION)
LED6	12- 13	Open	Closed	Output	FAN STOP(OPTION)
	12- 14	Closed	Open		
LED7	15- 16	Closed	Open	Output	OIL PUMP RUN
LED8	17- 18	Open	Closed	Output	OIL PUMP STOP
	17- 19	Closed	Open		
LED9	20- 21	Closed	Open	Output	SPARE1
LED10	22- 23	Closed	Open	Output	SPARE2
LED11	24- 25	ON	OFF	Input	THRUSTER RUN (for power off interlock)
LED12	26- 27	ON	OFF	Input	[DL1] MAIN SOURCE ON
LED13	26- 28	ON	OFF	Input	[DL2] POWER AVAILABLE(OPTION)
LED14	26- 29	ON	OFF	Input	[DL4] READY TO START
LED15	30- 31	ON	OFF	Input	[DL3] FAN RUN (OPTION, for power off interlock)
LED16	32- 33	ON	OFF	Input	[DL6] SPARE
LED17	32- 34	ON	OFF	Input	[DL7] SPARE
LED18	32- 35	ON	OFF	Input	[DL8] SPARE
LED19	32- 36	ON	OFF	Input	[DL9] SPARE
LED20	37- 38	ON	OFF	Input	OIL PUMP RUN (for power off interlock)
LED21	39- 40	ON	OFF	Input	[AL3] SPARE
LED22	39- 41	ON	OFF	Input	[AL4] OIL LOW LEVEL
LED23	39- 42	ON	OFF	Input	[AL5] OIL LOW PRESS
LED24	39- 43	ON	OFF	Input	[AL6] OIL PUMP OVER LOAD
LED25	44- 45	ON	OFF	Input	[AL7] MAIN MOTOR OVER LOAD
LED26	44- 46	ON	OFF	Input	[AL8] MAIN MOTOR TRIP
LED27	44- 47	ON	OFF	Input	[AL9] MAIN MOTOR START FAIL
LED28	44- 48	ON	OFF	Input	[AL10] SPARE
LED29	44- 49	ON	OFF	Input	[AL11] SPARE
LED30	50- 51	ON	OFF	Input	SPARE1(PITCH REDUCTION: OPTION)
LED31	52- 53	ON	OFF	Input	SPARE2
LED32	99-100	ON	OFF	Output	Solenoid valve output
LED33	99-101	ON	OFF	Output	Solenoid valve output
LED34	102-103	Closed	Open	Output	NON FOLLOW Control (VDR)
LED35	104-105	Closed	Open	Output	W/H Control (VDR)
LED36	114-115	Closed	Open	Output	THRUSTER READY
LED37	116-117	ON	OFF	Input	KICS CONTROL
LED38	124-125	Open	Closed	Output	INTEGRATED ALARM
LED39	126-127	Open	Closed	Output	ALARM POWER FAIL
LED40	P1- N1	Normal	Failure	-	DC Power source (TB10-1～TB10-2): P-N
LED41	P2- N2	Normal	Failure	-	AC Power source (TB10-3～TB10-4): R-S
LED42	Inside	Normal	Failure	-	DC or AC power source normal
LED43	Inside	Normal	Failure	-	Control power source
LED44	Inside	Normal	Failure	-	Monitor power source

Troubleshooting
For
MTHⅢ Type Thruster Controller

Nabtesco Corporation
MARINE CONTROL SYSTEMS COMPANY
ENGINEERING DEPT.

–	APPLY:MTHⅢ	–	'04 4.2	小林	——	東	松本
REV. MARK	NOTE		DATE	DESIGNED		CHK.	APVD.

Introduction

This manual is prepared to narrow and locate the trouble when it occurs in the thruster remote control system as soon as possible.

1. Abbreviations

WH: Wheel House Controller
PW: Port Wing Controller
SW: Starboard Wing Controller
PT : Portable Controller
JB : Junction box
TBU: Terminal Board Unit(In W/H)
KCF: Blade Angle Follow-up Transmitter

2. Checking Power Supply Voltage and Indicator Lamps

Before starting the investigation of trouble cause, measure the power supply voltage and check indicator lamp for burnt-out light bulb by pressing the LAMP TEST button.

AC power supply: terminals TBP R and S on TBU (For the voltage, see the specifications.)
24 VDC: terminals TBP P and N on TBU
Power switches on TBU: AC and DC power switches should be ON.
(These switches should be OFF when the system is maintained or not used for a long time.)

3. Checking Alarms

"AC SOURCE FAIL" alarm: It is given if the input source has no voltage or the power switch on TBU is turned off.
"DC SOURCE FAIL" alarm: It is given if the input source has no voltage or the power switch on TBU is turned off.
"CONTROLLER ABNORMAL" alarm:
During W/H control, if the CONTROL ABNORMAL alarm is given, the present blade angle will be maintained but immediately shifting to the NON FLOW UP control is recommend.
During wing control, if the CONTROLLER ABNORMAL alarm is given, the present blade angle will be maintained but immediately changing the control position to W/H and shifting to the NON FLOW UP control are recommended.

* An alarm is given in W/H and both wings because there is:
Broken potentiometer in Blade angle transmitter (Left side factor LED ON)
If the voltage between terminals 119 and 120 on TBU is within about 3~ 12VDC, the potentiometer is normal.
If the voltage between terminals 122 and 123 on TBU is within about 3~ 12VDC, the potentiometer is normal.
Control or Alarm source failure (Right side factor LED ON)
Check fuse(s) in Terminal Board Unit.

CPU or communication abnormality. (Right side factor LED ON)
Turn off the system and turn on it after a while.

* An alarm is given in a control position that has the present control right because there is:
(Center factor LED ON)

Broken potentiometer in WH.
If the voltage between potentiometer terminals 2 and 3 is within about 1～9VDC, the potentiometer is normal.

Broken potentiometer in PW.
If the voltage between terminals 74 and 75 on Terminal board unit (TBU) is within about 1～9VDC, the potentiometer is normal.

Broken potentiometer in SW.
If the voltage between terminals 89 and 90 on Terminal board unit (TBU) is within about 1～9VDC, the potentiometer is normal.

Broken potentiometer in PT.
If the voltage between terminals 92 and 93 on Terminal board unit (TBU) is within about 1～9VDC, the potentiometer is normal.

4. Troubleshooting

Press a button until it touches the end.

Trouble	Check Point (CP)	Result		Cause/Remedy
A1. Wing control is not available.	When WING button is pressed, 1) WING lamp flickers. However, CONTROL AVAIL button is not effective. 2) WING lamp does not flicker.			1. Go to CP① 2. Consult NABCO.
	①Check that wing dial position agrees with the actual blade angle. (In the case there is an interlock for the agreement)	PW /SW dial	Agree	Go to CP ②
			Disagree	Imperfect interlock condition.
	②Check wiring between terminal 10 of PW or SW and TBU for looseness.	PW /SW /TBU terminal	No good	Tighten again.
			Good	Consult NABCO.
A2. Potable control is not available.	When WING button is pressed, 1) When PORTABLE button is pressed, PORTABLE lamp on. However, Can not potable control 2) POTABLE lamp does not .			1.Go to CP① 2. Consult NABCO.
	①Check that portable dial position agrees with the actual blade angle. (In the case there is an interlock for the agreement)	PT dial	Agree	Go to CP ②
			Disagree	Imperfect interlock condition.
	②Check wiring between JB,PT,TBU and connecter for looseness.	PT JB /TBU terminal	No good	Tighten again.
			Good	Consult NABCO.
B. W/H control is not restored.	When W/H button is pressed, 1) W/H lamp flickers. 2) W/H lamp does not flicker.			1. Go to CP① 2. Consult NABCO.
	①Check that WH dial position agrees with the actual blade angle. (In the case there is an interlock for the agreement)	WH dial	Agree	Consult NABCO.
			Disagree	Imperfect interlock condition.

Trouble	Check Point (CP)	Result		Cause/Remedy
C. Follow up control is not available. (Note that during starting of thruster, follow up control is not available and the neutral is maintained.)	1) When CONTROLLER ABNORMAL is not occurred, is non-follow up control available?	Non-follow control	Available	Consult NABCO.
			Not available	Go to CP①or②.
	①Measure voltage between TBU terminals 99 and 100 when PORT button is pressed during non-follow up control.	Voltage	0 VDC	Consult NABCO.
			24 VDC	Check wiring between TBU terminals 99,100 and solenoid valve for looseness. Check PORT solenoid valve.
	②Measure voltage between TBU terminals 99 and 101 when "STBD" button is pressed during non-follow up control.	Voltage	0 VDC	Consult NABCO.
		Voltage	24 VDC	Check wiring between TBU terminals 99,101 and solenoid valve for looseness. Check STBD solenoid valve.
D. Non-follow up control is not available.	1) Is follow up control available?	Follow control	Available	Consult NABCO.
			Not available	Go to C-CP①or②.
E. OLP does not function.	1) Connect an ammeter between TBU terminals 56 and 57 with thruster stopped, and then check that the current value is the same as the design value after starting thruster. (Before removing the ammeter, stop thruster and install a jumper between TBU terminals 56 and 57.)	Current	The same as design value.	Consult NABCO.
			There is a differenc e.	Check CT.
			0 A.	Check wiring between TBU terminals 55, 56, 57, 58 and CT for looseness. Check CT.
F. Oil pump does not stop	When pressing Pump stop button.			
	①Oil pump status?	Oil pump	Stop	Go to CP②.
			Run	Go to CP③.
	②Remove TBU terminal 38.	Pump lamp	On	Consult NABCO.
			Off	Check starter.
	③Remove TBU terminal 16 and jumper 17-18.	Oil pump	Stop	Consult NABCO.
			Run	Check starter.

Trouble	Check Point (CP)	Result		Cause/Remedy
G. Fan does not stop	When pressing Pump stop button.			
	①Fan status?	Fan	Stop	Go to CP②.
			Run	Go to CP③.
	②Remove TBU terminal 31.	Fan lamp	On	Consult NABCO.
			Off	Check starter.
	③Remove TBU terminal 11 and jumper 12-13.	Fan	Stop	Consult NABCO.
			Run	Check starter.
H. Thruster does not stop	When pressing Thruster stop button.			
	①Thruster status?	Thrust	Stop	Go to CP②.
			Run	Go to CP③.
	②Remove TBU terminal 25.	Thrust lamp	On	Consult NABCO.
			Off	Check starter.
	③Remove TBU terminal 2 and jumper 3-4.	Thrust	Stop	Consult NABCO.
			Run	Check starter.
I. Oil pump does not start.	When pressing Pump run button,			
	①Oil pump status?	Oil pump	Stop	Go to CP②.
			Run	Go to CP③.
	②Install a jumper between TBU terminals 15 and 16.	Oil pump	Stop	Check starter.
			Run	Consult NABCO.
	③Install a jumper between TBU terminals 37 and 38.	Pump lamp	On	Check starter.
			Off	Consult NABCO.
J. Fan does not start.	When pressing Pump run button,			
	①Fan status?	Fan	Stop	Go to CP②.
			Run	Go to CP③.
	②Install a jumper between TBU terminals 10 and 11.	Fan	Stop	Check starter.
			Run	Consult NABCO.
	③Install a jumper between TBU terminals 30 and 31.	FAN lamp	On	Check starter.
			Off	Consult NABCO.
K. Thruster does not start.	When pressing Turuster run button, 1) Thruster run lamp is ON 2) Thruster run lamp is OFF			1. Go to CP①. 2. Consult NABCO.
	①Thruster status?	Thrust	Stop	Go to CP②.
			Run	Go to CP③.
	②Install a jumper between TBU terminals 1 and 2.	Thrust	Stop	Check starter.
			Run	Consult NABCO.
	③Install a jumper between TBU terminals 24 and 25.	Thrust lamp	On	Check starter.
			Off	Consult NABCO.
	④Install a jumper between TBU terminals 6 and 7.	Thrust	Stop	Check starter.
			Run	Consult NABCO.

Trouble	Check Point (CP)	Result		Cause/Remedy
L. Wing control does not work normally.	*All of alarm lamps on W/H goes off. However, alarm lamps on wings are on. *Only pitch indicators on wings does not show correct pitch.			Check if wing stand is flooded or not.
M. Control dial slips.				Remove the upper cap on dial and tighten the nut.
N.W/H alarm function does not worked normally.	Alarm is given in W/H, but no alarm is on starter panel. When pressing BUZZER STOP button, 1) Buzzer stops sounding and lamp turns on. 2) Buzzer does not stop sounding and lamp keeps on flickering.			1. Go to CP①. 2. Consult NABCO.
	①Install a jumper between TBU terminals of the alarm-input contact.	Alarm lamp	Off	Check starter.
			On as it is	Check connector for flat cable. Consult NABCO.

Nabtesco's *technology leads the future of modern vessels.*

ナブテスコのテクノロジーが近代化船の未来をリードします。

● **Periodical maintenance is required for remote control systems, digital govemors, pneumatic/electric/electronic devices!**

Fortunately, we have achieved the 26,000-set production of remote control systems since their first delivery in 1963, and the 2,100-set production of digital govemors in 2003.**Nabtesco** is thanking all the customers for their patronage.

The delivered **Nabtesco** systems/devices, which mainly consist of electric/electronic components and pneumatic components, are the essential equipment to secure your vessel's safe voyages. Since the malfunction or failure in them can seriously hinder the safe voyages, they are required to maintain reliability that should be supported by everyday servicing and periodical and planed maintenance. **Nabtesco** is recommending periodical maintenance programs to the customers in which proper maintenance intervals are set based on the long experience and data analysis.At this opportunity, please consider accepting our recommended maintenance program and then take an order of maintenance work at the earliest docking chance.

・遠隔操縦装置、電子ガバナ、空圧／電気／電子機器の定期メンテナンスをお奨めします！

ナブテスコは、1963年に舶用遠隔制御装置の初号機を生産して以来、累計生産台数26,000台を達成し、また、2003年には電子ガバナの累計生産台数2,100台を達成することができました。これもひとえに皆様方のご支援、ご愛顧の賜物と深く感謝申し上げる次第でございます。

さて、納入させていただきました**ナブテスコ**制御機器は電子／電子機器ならび空圧機器で構成され、本船の安全運航を確保する意味では大変重要なシステムです。機器の不調や故障は運航上重大な支障をきたす可能性がありますので、特に信頼性が要求され、普段の点検や定期的・計画的なメンテナンスが必要です。弊社では永年にわたる経験とデータ分析により、以下のように適切なメンテナンス間隔を設定した定期メンテナンスを推奨いたしておりますので、この機会に弊社推奨のメンテナンス計画を織り込んでいただき、次回ドック時にはご用命を賜りますようお願い申し上げます。

● **Nabtesco's Policy, Continuous achievement of CS(Customer Satisfaction)** ナブテスコの方針：C.S.（顧客満足度）の絶えまざる追求

● **Available After-Sales Service Menu** ご提供できるサービスメニュー

- **Periodical maintenance** 定期メンテナンスサービス
- **Spare parts supply** 予備品供給
- **Document service (Supplying the Maintenance List and Record)** 文書サービス（メンテナンスリストおよび記録のご提供）
- **Training program — Troubleshooting training with a Failure Check System**
  トレーニングコース－故障診断装置を使用しての故障診断・修理トレーニング
- *** Recommendation of long-term maintenance contract** 長期メンテナンス契約締結のお奨め

● **Recommended Periodical Maintenance** 推奨定期メンテナンス

○ (Strong Recommendation)

	Periodical Maintenance Interval 定期メンテナンスインターバル				Remarks 備考
	2.5 Years	5 Years	7.5 Years	10 Years	
Digital governor 電子ガバナ - Control unit コントロールユニット - Actuator アクチュエータ		○		◎	- 5 years: Regular inspection - 10 years: Actuator will be overhauled or replaced. 5年目：定期検査 10年目：オーバーホールもしくはアクチュエータ交換
Pneumatic components 空圧機器 - Low-and high-pressure devices & other parts 低・高圧用空圧機器その他	○	◎	○	◎	- All pneumatic components should be overhauled every 5 years. (Overhaul and replacement of rubber parts and filter elements) 5年毎に空圧機器のオーバーホールを一巡させます。 (開放点検／ゴム部品・フィルターエレメント交換)
Electric/electronic components in remote control systems リモコンシステム用電気・電子機器 - Power supply unit 電源装置 - Potentiometer ポテンショメータ - Proximity switch 近接スイッチ - Various relays 各種リレー - Annunciator アナンシエータ		◎		◎	- Regular maintenance should be carried out every 5 years; some parts will be replaced according to the result as well as major components. 5年毎に定期検査を行い、主要機器および定期検査の結果により必要な部品の交換を行います。

—Before each job, the Maintenance List will be submitted to your company. いずれの場合も事前にメンテナンスリストを提出いたします—

After-Sales Service - Offering Proper Technique and Reliability

サービス－それは確かな技術と信頼の提供です

Nabtesco's *worldwide service network guarantees the safety of your vessels.*

ナブテスコのワールドワイドなサービスネットワークが貴社の船舶の安全運航をお約束します。

● **Periodical Maintenance for Main Engine Remoto Control Systems** 主機リモコン装置への定期メンテナンスのご推奨

Maintenance no longer means simple repairing but implies preventive service and adjustments against disorder. **Nabtesco** recommends planned maintenance to the customers which will guarantee safe voyages, the reduction in cost, and planned budget-making.

今、時代は故障が起きてから修理を行うのではなく、予防・整備メンテナンスへと移ってきています。**ナブテスコ**では、計画的メンテナンスをお客様にお奨めしておりますが、これにより安全運航、コストの削減、計画的メンテナンス予算の作成を行うことができます。

● **Recommendation of Long-Term Maintenance Contract** 長期メンテナンス契約のお奨め

By concluding a long-term maintenance contract, there will be the following merits:

- There is no need to negotiate the maintenance fee every time.
- The maintenance will be made suitably in the range of the annual budget. The annual budget will be set easily.
- The management efficiency of maintenance work will be increased by the check list made before the work and the simplified maintenance report.

長期メンテナンス契約を締結していただくと以下のようなメリットがあります。

－各メンテナンス工事の都度、料金を打ち合わせる必要がなくなります。

－年間メンテナンス予算の枠内で最適な工事を施行することができます。年間予算は容易に設定することができます。

－各工事の前に作成するチェックリストと簡略化したメンテナンス工事報告書により、メンテナンス工事の管理効果がアップします。

● **Spare Parts Supply** 予備品の供給

Based on its worldwide network, **Nabtesco** is supplying spare parts promptly to the customer by reinforcing the inventory control system and the prompt delivery system. We will prepare quotes for spare parts upon request.

ナブテスコはワールドワイドネットワークをベースに、迅速な部品供給ができるように、在庫管理機能の充実ならびに即納体制の強化に努めています。ご要望に応じて見積りいたします。

● **Training Program** トレーニングコース

Reliable technique and sincere attendance are the first requisite to satisfy your requirement. **Nabtesco** is has established a systematic training program ranging from the policy of after-sales service to technical skills. A certificate of achievement will be awarded to the trainees upon the successful completion of the program. Training programs for crew and other end-users are also available. Meanwhile, NABMIC (Netherlands) will open a training program for crew at the beginning of 2000 and **Nabtesco Marine Service Singapore** has just opened the similar program at this time. For details, please contact a service center convenient for you.

ユーザーと直結するサービスマンには「確かな技術と真心のこもった対応」が求められます。**ナブテスコ**はサービス思想から技術トレーニングまで、計画的なサービスマン教育を実施し、トレーニング修了者には認定書を発行する制度を確立しています。このトレーニングを修了した優秀なサービスマンをユーザーのもとへ派遣いたします。また、乗組員ほかユーザーのためのトレーニングコースも開設しております。また、2000年頭からはNABMIC（オランダ）で船員研修コースが開設され、2000年11月に**Nabtesco Marine Service Singapore**（シンガポール）でも開設致しました。詳細は最寄りのサービスセンターまでお問い合わせください。

● **Worldwide After-Sales Service Network** ワールドワイドサービスネットワーク

Nabtesco is intends to widen its after-sales service network according to the variation in berthing and repairing places, dispatching service engineers to the vessels around the world as well as sending spare parts. We are expanding the worldwide service network through **Nabtesco** is (Japan), **Nabtesco Marine Service Singapore**, and NABMIC (Netherlands) under the leadership of the headquarters (**Nabtesco** is Kobe). These three regional centers are well connected with their local service agents, which allows us to respond quickly with the best condition for any requirements of service.

世界各地で運航している船舶に対して、入渠あるいは整備／修繕予定地がさらに多岐化する現在、**ナブテスコ**ではいつでも、どこへでもサービスマンを派遣し、補修部品の供給ができるようなサービスネットワークの拡充を計っています。ネットワークシステムとして、サービス部門の統括本部をナブコ神戸に置き、日本、シンガポール、オランダの3拠点をベースとしたワールドワイドなネットワークの展開をいたしております。本部および3拠点、さらに国内外のサービス代理店は常時緊密に連携し、いつ、どこへサービスのご依頼があっても、最適な条件で迅速にお答えできる体制をとっております。

● **Service Centers** サービスセンター

- **Nabtesco Corporation.** (Japan): After-Sales Service Department / Headquarters — Kobe Office (in Executive Office) — Tokyo Office
- NABMIC B.V. (Netherlands)
- **Nabtesco Marine Service Singapore PTE., LTD.** (Singapore)

* For further information and contact addresses / telephone numbers, please see the back of this document and catalogues.

詳細および連絡先につきましては、裏面ならびにカタログをご参照ください。

Anywhere Around the World, Anytime Round the Clock!

世界中どこでも、365日／24時間いつでも！

SERVICE NETWORK

To the users of **Nabtesco** system, we are always ready to answer swiftly your requests for after-sales service on **Nabtesco** system. Please call the following **Nabtesco** Service Centers.

Particularly ourr service center can accept calls 24 hours during whole year.

ナブテスコは、システムをご利用いただいているユーザーの皆様からのサービスご依頼に対し、いつでも迅速にお応えする体制をとっております。
ご依頼の際は、下記最寄りのサービスセンターに御連絡下さい。
NABTESCOサービスセンターは365日／24時間お応えする体制をとっております。夜間、休日のお問い合わせの場合は転送にしばらく時間がかかりますのでそのまま約1分お待ち下さい。

Service Center

● **JAPAN**
NABTESCO MARINE SERVICE CO.,LTD
1617-1 Fukuyoshi-dai 1-chome
Nishi-ku, kobe, 651-2413, Japan
Phone:+81 78 967 1404
FAX :+81 78 967 4891

● The Netherlands
NABMIC B.V.
Louis Pasteuraat 8, 3261 LZ Oud-Beijerland
P.O.Box 1558, 3260 BB Oud-Beijerland
The Netherlands
Phone:+31 186 636 777
FAX :+31 186 636 778

● Singapore
NABTESCO Marine Service Singapore Pte., Ltd.
102E Pasir Panjang Road, #05-03,
Citilink Industrial Complex, Singapore 118529.
Phone:+65 6225 6559
FAX :+65 6225 7393

Marketing Department

○ Kobe Office
1617-1 Fukuyoshi-dai 1-chome
Nishi-ku, kobe, 651-2413, Japan
Phone:+81 78 967 5361
FAX :+81 78 967 5362

○ Tokyo Office
Kokusai Hamamatsucho Bldg., 9-18, Kaigan
1-chome, Minato-ku, Tokyo, 105-0022, Japan
Phone:+81 3 5470 2413 (Overseas Marketing Sec.)
FAX :+81 3 5470 2417

Nabtesco
ナブテスコ株式会社

●西神工場 〒651-2413 神戸市西区福吉台1丁目1617番1 TEL(078) 967-1401 FAX.(078) 967-1279

●神戸営業
〒651-2413 神戸市西区福吉台1丁目1617番1
TEL.(078) 967-5361 FAX.(078) 967-5362

●東京営業・海外営業
〒105-0022 東京都港区海岸1丁目9番18号 国際浜松町ビル
東京営業 TEL.(03) 5470-2411 FAX.(03) 5470-2417
海外営業 TEL.(03) 5470-2413

CAT.NO.SM43-044-0410-10D

Nabtesco GLOBAL SERVICE NETWORK

NABTESCO CORPORATION for Japan, Korea, China, U.S.A. etc.
- ●NABTESCO MARINE SERVICE CO.,LTD.Japan
- ●HAKUYO SEIKI CO.,LTD.Japan
- ●KOYO KEISO CO.,LTD.Japan
- ●SHIKOKU MARINE CUSTOMER SERVICE CO.,LTD.Japan
- ●MARINE ENTERPRISE CO.,LTD.Japan
- ●MENTE SYSTEM LTD.Japan
- ●YOKOHAMA DENKO CO.,LTD.Japan
- ●NAKAYA SANGYO CO.,LTD.Japan
- ●NABTESCO MARINETEC CO.,LTD. Korea
- ●KT ELECTRIC CO.,LTD.Korea
- ●NABTESCO COPRORATION.Shanghai office
- ●SHANGHAI SHIP AND SHIPPING RESEARCH INSTITUTE, China
- ●WEYCHANG BROTHERS' CO.,LTD.Taiwan
- ●MARICO ENGINEERING CO.,LTD.Hongkong
- ●THE REXROTH CORPORATION PNEUMATICS DIVISION,U.S.A
- ●RADIO HOLLAND U.S.A.Inc.U.S.A

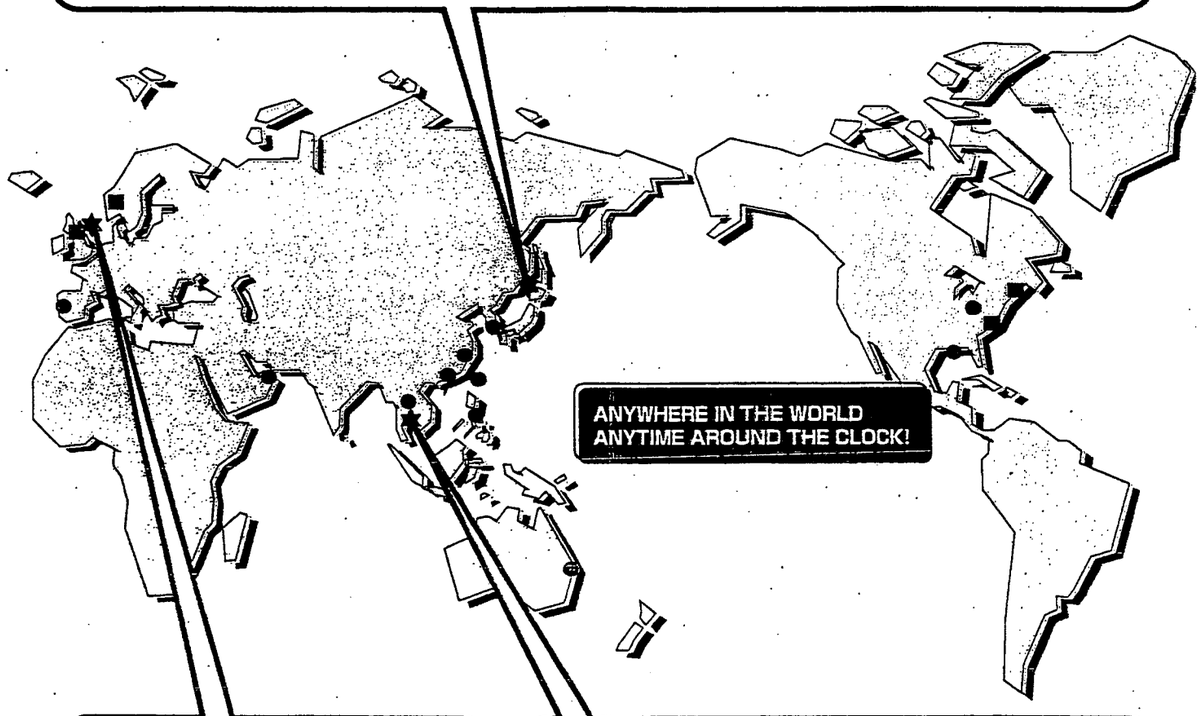

NABMIC B.V.
Netherlands
for Europe, Middle East
- ●DART AUTOMATION INC. U.A.E.
- ●CONTROLIS LDA.Portugal

NABTESCO MARINE SERVICE Singapore PTE., LTD.
for ASEAN, Australia and Newzealand
- ●MARICO ENGINEERING(S)PTE., LTD. Singapore
- ●IHI MARINE ENGINEERING(S)PTE., LTD. Singapore
- ●BRIDEX ELECTRIC PHILIPPINES,Inc.Philippines
- ●AQUALOGIC INDUSTRIES PTY LTD, Australia

★Parts & Personnel service center ●Parts & Personnel service station ■Parts service station

Parts service station

■ Greece	ISS MACHINERY SERVICES LTD. (Piraeus)	■ U.K.	ISS MACHINERY SERVICES LTD. (London)
■ Norway	ISS MACHINERY SERVICES LTD. (Oslo)	■ U.S.A.	ISS MACHINERY SERVICES LTD. (New Jersey)
■ U.A.E.	ISS MACHINERY SERVICES LTD. (Dubai)	■ U.S.A.	FUJI TRADING INC. (Newport News)

Handling manual of **Nabtesco** Control equipment

1. Installation

1) Take care that foreign matters or dust should not come in each equipment and pipe. Without fail clean pipes with compressed air of 0.5to 0.7MPa before connection.
2) Use the pipes specified in the circuit diagram.
3) In case of piping by brazing or welding, take care that the passage or pipes are not narrowed or blocked by molten metal.
4) Arrange each equipment so that the length of pipes can be shortened.
5) Use the cable specified in the electric circuit diagram.
6) Install the electric equipment where there is less vibration.
7) After finishing the piping with blowing air, supply compressed air of 0.7MPa and check the air leakage at the connecting portion with soapsuds.

2. Application

1) Do not touch the red-painted portion except unavoidable cases, since it is fully adjusted by Nabtesco.
2) Drain the filter or the tank once a day.
3) In regard to filters or strainers, overhaul the filter elements within one month after application. Replace dirty vinyl sponge elements with new ones. Overhaul the filter of main line regularly once a month.
4) In regard to other pneumatic equipment, only regular inspection is required.
   The period of regular inspection depends on the environment and the frequency (Refer to the following)
   ○Equipment for 1.0MPa installed in Bridge or Engine Room
   (Under good condition of dry and clean air)·····every five years
   ○Change-over valves for high pressure
   (3.0MPa)·····every two years
   ○Devices installed on deck·····Once a year or every two years
   (according to enviromental conditions)
5) Make regular inspection referring to the drawing and manual of each equipment. Replace damaged parts with new ones. Apply good grease to the sliding portion and reassemble them. (Recommended grease: COSMO OIL Dynamax No.2, etc.) Replace main rubber parts such as valve seat, diaphragm, and sliding packing with new ones once five years. Replace rubber parts for gasket seal of stopping portion once six to eight years.
6) The variation of power source voltage should be in ±10% of rating. In case of the application charging 24V battery, take care not to exceed 27V.

Nabtesco 制御機器・装置取扱説明

1. 艤装上の注意事項

(1) 配管工事の際，各機器および管内に塵や異物が入らないよう注意し，必らず接続の前に管内を圧力空気（0.5～0.7MPa）で十分吹かし清浄にするようしてください。
(2) 配管は，回路図中に指定されたものを使用してください。
(3) ロー付または溶接配管をする場合は接続個所の通路が絞られないよう，また，ロー等が管内に流入し管がつまるようなことがないよう十分に注意してください。
(4) 配管の長さはできるだけ短かくするよう機器の配置を考えてください。
(5) 電気配線はできるかぎり，盤間配線図に指示されたケーブルを使用してください。
(6) 電気機器はできるだけ振動の少ない場所に取付けるようにしてください。
(7) エヤーふかしを行ない配管が全て完了してから0.7MPaの空気を供給し，配管の接続個所から空気の洩れがないか石鹸水にてチェックしてください。

2. 使用上の注意事項

(1) 赤ペンを塗って封印した箇所はNabtescoにて十分調整検査した箇所ですからできるだけさわらないようにしてください。
(2) フィルターおよびタンクに溜まるドレンは，1日1回ぬいてください。
(3) 塵コシ類は使用開始後1カ月以内に，分解してフィルターエレメントの清掃を行ってください。ビニールスポンジエレメントで汚れのひどいものは新品と交換してください。メインラインの塵コシはその後も毎月1回程度定期的に分解清掃を行ってください。
(4) 他の空気圧機器は定期点検以外特に点検を必要としません。定期点検の時期は使用環境，作用頻度を勘案し下記推奨基準を参考として決定してください。
   ◦船橋または機関室設置の1.0MPa用機器
   乾燥清浄空気を使用するなど好条件の場合　5年に1度
   ◦高圧用（3.0MPa）切換弁類　2年に1度
   ◦暴露甲板上に設置された機器　1年に1度もしくは2年に1度（環境に応じて決定）
(5) 定期点検は各機器の図面及び説明書参照の上分解洗浄し損傷部品は新品と取替え，摺動部に良質のグリースを塗布して再組立してください。（推奨グリース　コスモ石油ダイナマックスNo.2相当品）
   バルブシート，膜板，摺動パッキン等重要なゴム部品は5年に1度，静止部品のガスケットシール用ゴム部品は6～8年に1度新品と取り替えるようにしてください。
(6) 電源電圧の変動は定格の±10%以内に必らず押えてください。24Vバッテリーを充電しながら使用する場合も絶対に27Vを超えないよう注意してください。

KAWASAKI

MAIN MOTOR

OF

KAWASAKI SIDE THRUSTER

KT-157B3

FOR

4,150TEU Class Container Carrier

HYUNDAI HEAVY INDUSTRIES CO.,LTD.
S.No.H1630/1,1671/2,1699-1701,1733

DELIVERY	
YARD	
KPME 工務	
KPME 工事	
工務	
組立	
検査	
控	1
ISSUE	

ORDER NO.
31KB068 ,70,72,74,76,78,80,82

NOTES
For working . Apr. 25, 2005 .

REVISION

DATE
November 24, 2004

KAWASAKI
HEAVY INDUSTRIES, LTD.

GAS TURBINE & MACHINERY COMPANY
MACHINERY DIVISION
MARINE MACHINERY DEP'T.
PROPULSION MACHINERY ENG'NG SECT.

APPROVED T. Harada

CHECKED M. Okada

DRAWN M. Ishihara

DRAWING NO.
G4-201-289

(SHEETS COVER INC)

HLM-

CUSTOMER : Kawasaki Heavy Industries LTD

PROJECT : H1630(1335Kw)

SPECIFICATION OF INDUCTION MOTOR

FOR FINAL

CLASS : LR

NO.	ITEM NO. (ORDER NO.)	TYPE	FRAME NO.	KW	P	VOLT	Hz	REMARKS
01	LA85013501	VSTC	450E	1335	6	3300	60	BOW
02	LA85013503	VSTC	450E	1335	6	3300	60	BOW
03	LA85013505	VSTC	450E	1335	6	3300	60	BOW
04	LA85013507	VSTC	450E	1335	6	3300	60	BOW
05	LA85013509	VSTC	450E	1335	6	3300	60	BOW
06	LA85013511	VSTC	450E	1335	6	3300	60	BOW
07	LA85013513	VSTC	450E	1335	6	3300	60	BOW
08	LA85013515	VSTC	450E	1335	6	3300	60	BOW
09	**********	**********	*******	********	****	********	*****	********
10								

HYOSUNG

HYOSUNG

BOW THRUSTER
INDUCTION MOTOR DATA SHEET

HYOSUNG SHOP. ORDER NO.

SHEET 1 OF 1 | CUSTOMER : Kawasaki Heavy Industries LTD

FOR FINAL | JOB NO. : 31KB068 | EQUIP NO. :

SERVICE : BOW THRUSTER | SITE : H1630 | QUANTITY : 1 SET

GENERAL DATA		PERFORMANCE DATA		
FRAME NO.	450E	OUTPUT	1335	KW
TYPE	VSTC	POLES	6	POLES
ENCLOSURE	TE	ROTOR TYPE	SQUIRREL CAGE	
COOLING METHOD	TC : TUBE COOLED	STARTING METHOD	AUTO TRANSFORMER 50%	
FREQUENCY	60 Hz			
PHASE	3 PHASE	PRIMARY		
INSULATION CLASS	F CLASS	VOLTAGE	3300	V
TEMP. RISE AT FULL LOAD		NO LOAD CURRENT	49	A
RES. METHOD	105 ℃	RATING CURRENT	284.1	A
THERMO. METHOD	-	STARTING CURRENT	1420	A
LOCATION	INDOOR	SECONDARY		
ALTITUDE	LESS THAN 1000M	VOLT (OPEN CIRCUIT)	-	V
HUMIDITY	LESS THAN 95%	CURRENT (LOAD)	-	A
AMBIENT TEMP.(MAX)	45 ℃	RES. (AT 25℃ LINE)	-	Ω
RATING	30MIN	EFFICIENCY		
NEMA DESIGN	-	AT 1/2 LOAD	-	%
MOUNTING	VERTICAL(V1)	AT 3/4 LOAD	-	%
BEARING TYPE	ANTI-FRICTION	AT FULL LOAD	94.5	%
UNLOAD/LOAD BRG. NO.	7326B / NU230	POWER FACTOR		
BRG. LUBRICATION	GREASE(ALVANIA II)	AT 1/2 LOAD	-	%
PROTECTION GRADE	IP44	AT 3/4 LOAD	-	%
		AT FULL LOAD	87.0	%
SERVICE FACTOR	1.0	SPEED (AT FULL LOAD)	1160	RPM
DRIVE	DIRECT-COUPLED	TORQUE		
SHAFT		FULL LOAD	10985	N-m
EXTENTION	SINGLE	LOCKED ROTOR	7690	N-m
VERTICAL	SOLID	BREAKDOWN	18675	N-m
EXTERNAL THRUST	NO	MAX LOAD GD^2 AT MOTOR SHAFT	1373	$N\text{-}m^2$
		MOTOR APPROX. WEIGHT	5800	Kg
ACCESSORIES (OPTIONAL)		PAINTING (MUNSELL NO.)	10 GY 8/4	
TEMPERATURE DETECTOR		SUBMITTAL DRAWINGS		
WINDING	YES (2EA/PH) /(1EA/PH)	OUTLINE DIMENSION	LMO0219	
TYPE	THERMISTER / Pt 100Ω	MAIN TERMINAL BOX	LME6412	
BEARING	NO	AUX. TERMINAL BOX	LME3089	
TYPE	-	NAME PLATE	LMEA567	
SPACE HEATER	YES	<NOTE> EXCEPT FOR STATEMENTS SPECIFIED ON THIS SHEET,		
RATING	1PH 220V 400W	ANYTHING ELSE SHALL BE IN ACCORDANCE WITH		
SLIDE BASE	NO	HYOSUNG STANDARD.		
SOLE PLATE	NO	<REMARKS>		
TERMINAL BOX		1. ABOVE ALL DATA ARE CALCULATED AT 100% VOLTAGE.		
MAIN	HYOSUNG STD.	2. MAIN TERMINAL BOX CABLE GLAND SIZE : 3x45B		
AUX.	HYOSUNG STD.	3. AUX. TERMINAL BOX CABLE GLAND SIZE : 20C+25A+30A		
APPLICATION STANDARDS		4. ROTATION : C.W (VIEW FROM LOAD SIDE)		
IEC, ISO		5. CLASSIFICATION SOCIETY : LR		
< NOTE >		6. SUPPLY SCOPE		
1. THESE DATA ARE ONLY DESIGN VALUES AND SHALL BE		- COUPLING HUB, O-RING : KAWASAKI		
GUARANTEED WITH TOLERANCE OF APPLICATION STANDARDS		- KEY, BOLT, END PLATE, ASSEMBLY : HYOSUNG		
		- RELAY FOR THERMISTER : FUJI ACT1C-1L(220V) 2EA/SET		
		7. TERMINAL BOXES ARE MARINE USE AND HAVE DURABILITY		
		AND RELIABILITY.		

* TE : TOTALLY ENCLOSED DP : DRIP PROOF
EP : EXPLOSION PROOF WPII : WEATHER PROTECTED II
** SC : SELF COOLED TC : TUBE COOLED
FC : FAN COOLED WC : WATER COOLED

REV. NO	DATE	PREPD BY	CHKD BY	APPRVD BY
0	05.07.14.	JEONG Y.G.	JEONG W.B.	AN S.S.
1				
2				

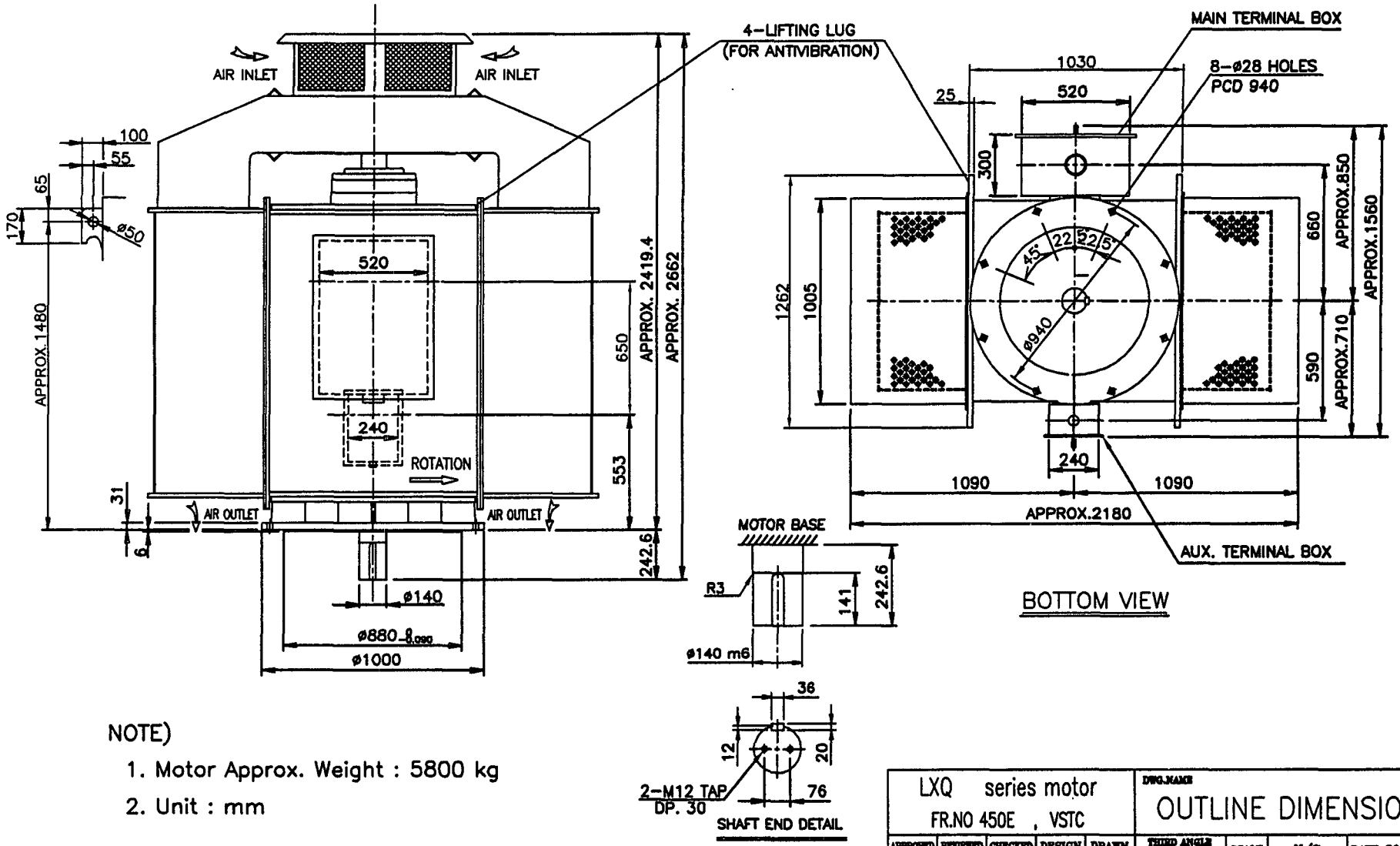

NOTE)

1. Motor Approx. Weight : 5800 kg
2. Unit : mm

DATE	MARK	REMARK	DSGN	CHK	APRD

LXQ series motor FR.NO 450E , VSTC					DWG.NAME OUTLINE DIMENSIONS			
APPROVED	REVIEWED	CHECKED	DESIGN	DRAWN	THIRD ANGLE PROJECTION	SCALE	N/S	DATE: 2005.04.10
L.S.S	A.S.S	J.W.B	J.Y.G.	J.Y.G.	REF. DWG. NO.	LMDL470(450G)		
HYOSUNG CORPORATION					DWG. NO.	L M 0 0 2 1 9		

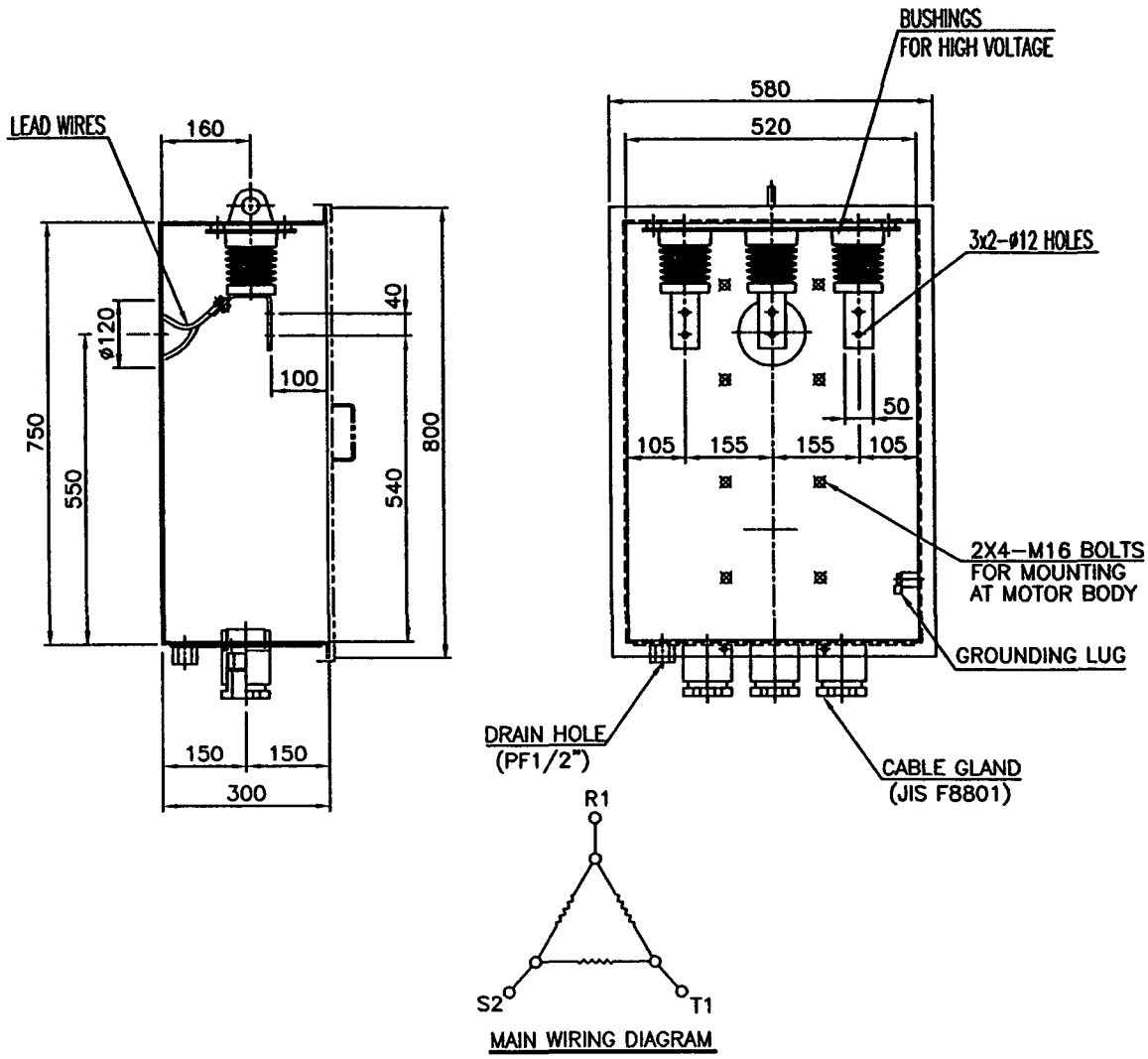

MAIN WIRING DIAGRAM

< NOTE >

1. ALL DIMENSIONS ARE APPROX.
2. TERMINAL BOX MAY BE COMPOSED OF STEEL PLATE.
3. PROTECTION DEGREE IS "IP55" ACCORDING TO IEC34 std. (WATER PROOF)
4. UNIT : mm
5. TERMINAL SUITABLE FOR CABLE(JIS C3410)
6. CABLE AND FLEXIBLE CORDS FOR ELECTRICAL EQUIPMENT OF SHIPS.
7. MARINE WATERTIGHT CABLE GLANDS FOR ENCLOSURES OF ELECTRIC APPARUTUS.
8. CABLE SIZE(POWER) : 50mm^2
9. Q'TY OF CABLE : 3EA
10. CABLE GLAND SIZE : 45B 3EA
11. TERMINAL BOXES ARE MARINE USE AND HAVE DURABILITY AND RELIABILITY.

DATE	MARK	REMARK	DSGN	CHK	APRD

LXQ series motor

DWG.NAME: MAIN TERMINAL BOX DETAIL

APPROVED	REVEIEWED	CHECKED	DESIGN	DRAWN
LEE.Y.Y	AN.Y.Y	JEONG.W.S	LEE.D.W	LEE.D.W

THIRD ANGLE PROJECTION	SCALE	N/S	DATE : 2004.07.05
REF. DWG. NO.	LMD4411		

HYOSUNG CORPORATION

DWG. NO. LME6412

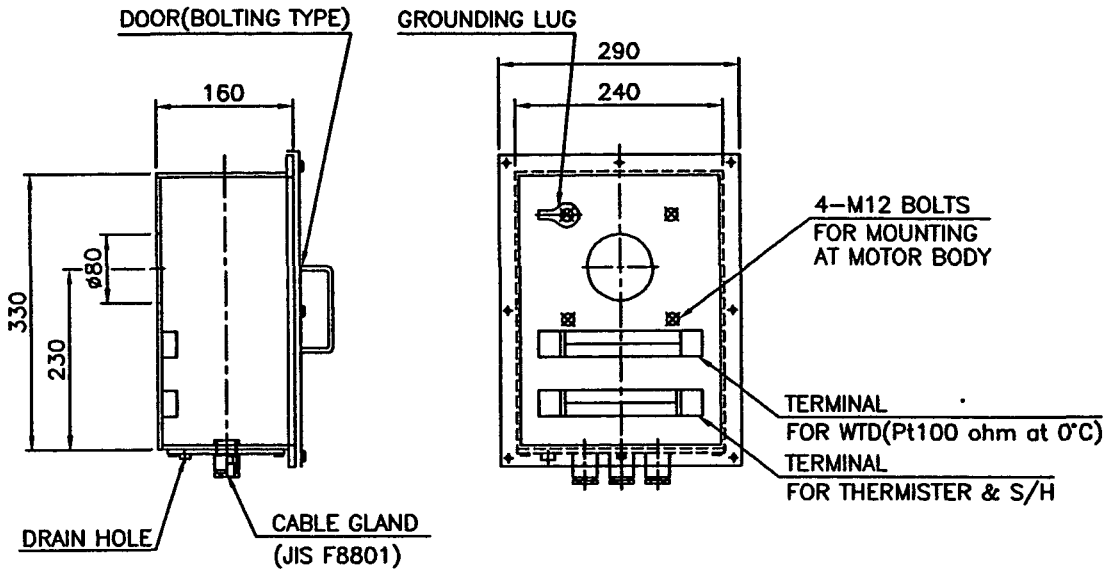

* WINDING TEMP. DETECTOR (W.T.D)
(Pt 100 ohm at 0°C)

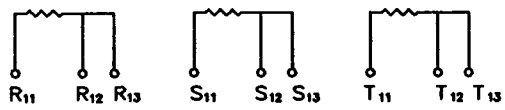

* SPACE HEATER
(1ø , 220V , 400W)

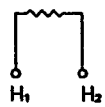

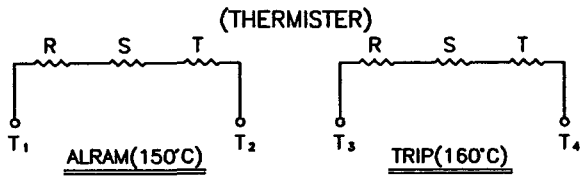

< NOTE >

1. ALL DIMENSIONS ARE APPROX.
2. TERMINAL BOX MAY BE COMPOSED OF STEEL PLATE.
3. PROTECTION DEGREE IS "IP44" ACCORDING TO IEC34 std. (WATER PROOF)
4. UNIT : mm
5. TERMINAL SUITTABLE FOR CABLE(JIS C3410)
6. CABLE AND FLEXIBLE CORDS FOR ELECTRICAL EQUIPMENT OF SHIPS.
7. MARINE WATERTIGHT CABLE GLANDS FOR ENCLOSURES OF ELECTRIC APPARUTUS.
8. CABLE SIZE(POWER) : 4mm^2, 2.5mm^2 & 12mm^2
9. Q'TY OF CABLE : 3EA
10. CABLE GLAND SIZE : 20C+25A+30A
11. TERMINAL BOXES ARE MARINE USE AND HAVE DURABILITY AND RELIABILITY.

DATE	MARK	REMARK	DSGN	CHK	APRD
	△				

AC MOTOR					DWG.NAME: AUX. TERMINAL BOX DETAIL			
APPROVED	REVIEWED	CHECK	DESIGN	DRAWN	THIRD ANGLE PROJECTION	SCALE	N/S	DATE 2004.07.05
					REF. DWG. NO.	LMD4412		
HYOSUNG CORPORATION					DWG. NO.	LME3089		

HYOSUNG THREE PHASE INDUCTION MOTOR

FR.NO.		TYPE	
HP (KW)	( )	TYPE OF ROTOR	SQUIRREL CAGE
POLE		DEGREE OF PROTECTION	IP
VOLTAGE	V	INS. CLASS	
RATING AMPS.	A	SERVICE FACTOR	
R.P.M		MAX. AMBIENT	°C
FREQ.	Hz	TIME RATING	MIN
PHASE	PH	NONDRIVE SIDE BRG.	
MOTOR WT.	KG	DRIVE SIDE BRG.	
DATE	DATE .	SERIAL NO.	

MADE IN KOREA

< NOTE >

1. MATERIAL : SUS304

DATE	MARK	REMARK

LXQ series motor

DWG.NAME

NAME PLATE

APPROVED	REVEIEWED	CHECKED	DESIGN	DRAWN
S.S.Lee	N.B.Jeong	B.K.Him		K.D.Chae

THIRD ANGLE PROJECTION | SCALE N/S | DATE : 2004.01.02

REF. DWG. NO.

HYOSUNG CORPORATION

DWG. NO. LMEA567

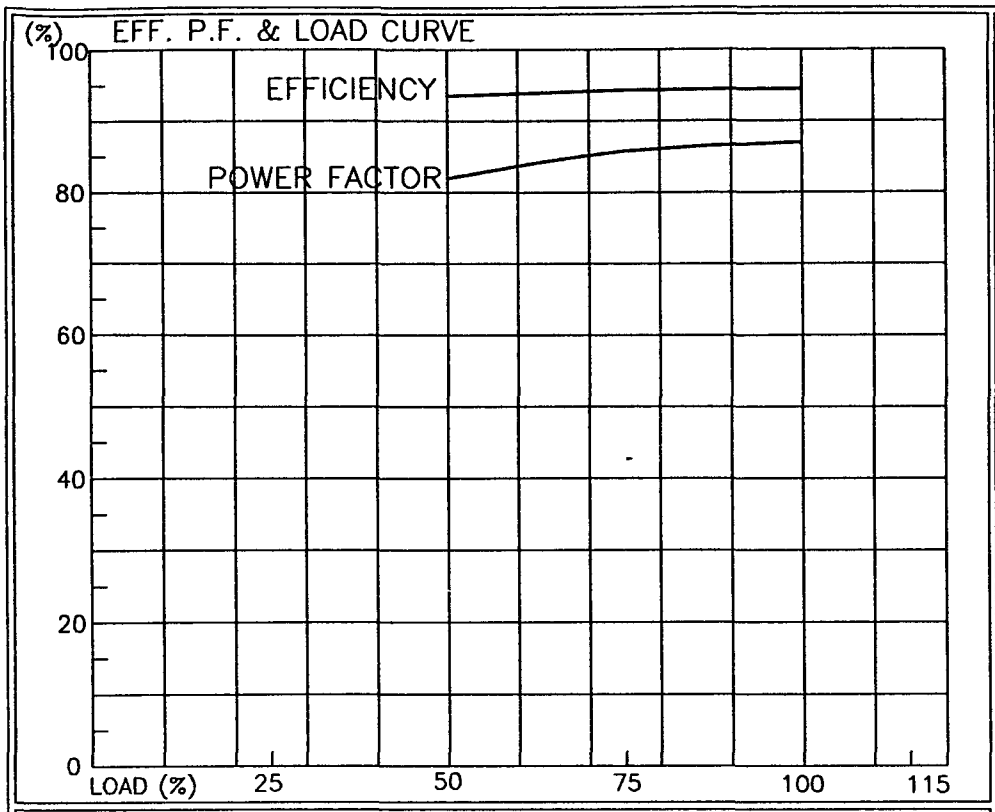

3 PHASE INDUCTION MOTOR	
TYPE	VSTC
KW	1335
POLE	6
FREQUENCY (Hz)	60
FRAME NO.	450E
FULL LOAD TORQUE(N.m)	10985
FULL LOAD (RPM)	1160

NOTE

MOTOR GD^2= 2176N.m^2

LOAD GD^2= 1373N.m^2

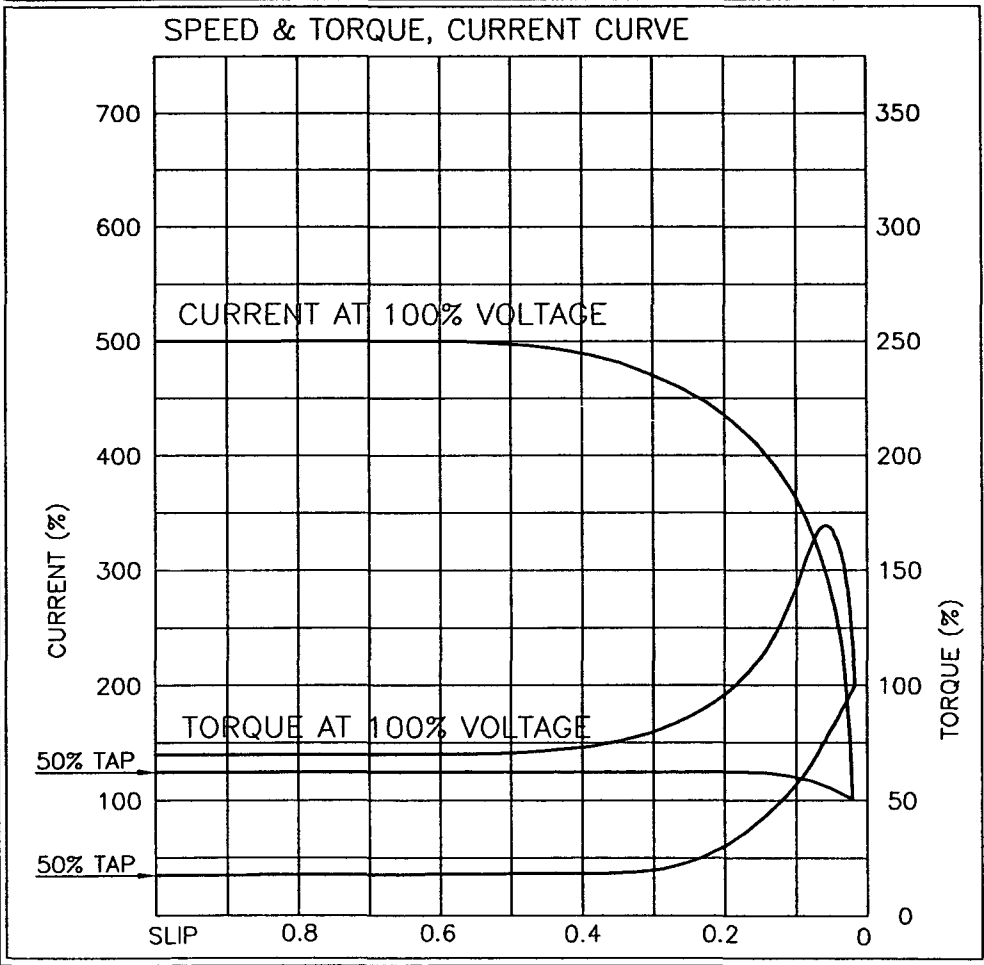

FULL LOAD CURRENT

NO.	VOLTS	FULL LOAD CURRENT(A)
01	3300	284.1
02		
03		
04		
05		
06		
07		
08		
09		
10		
11		
12		
13		
14		
15		

DATE	APPRVD BY	CHKD BY	PREPD BY	DWG NAME
2005.03.03	AN.S.S	JEONG.W.B	JEONG.Y.G	Eff. P.F. Curves Speed Torque, Current Curves
				DWG. NO. LMGC792A

A4(210X297)

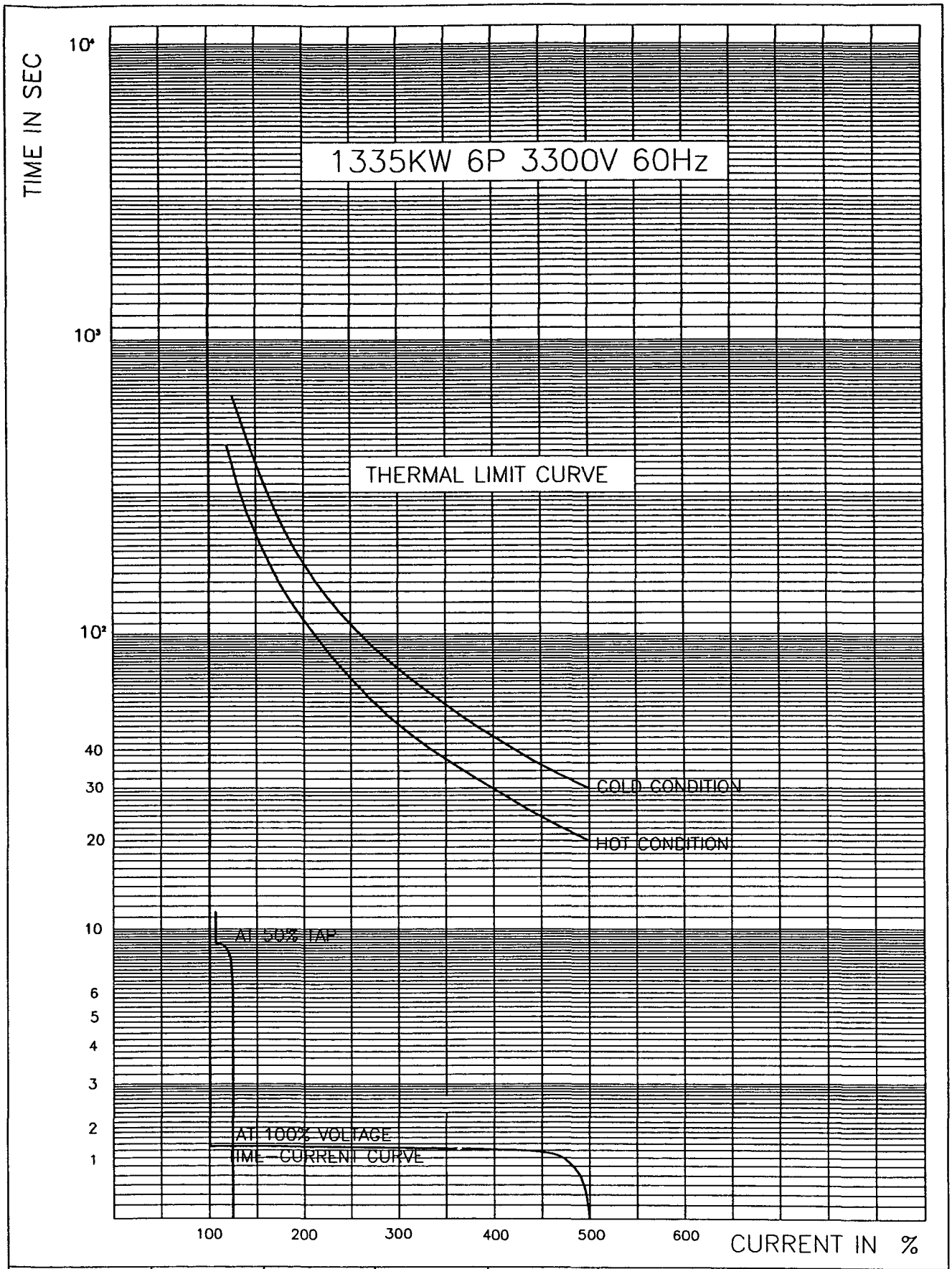

DATE	APPRVD BY	CHKD BY	PREPD BY	DWG NAME
2005.03.03	AN.S.S	JEONG.W.B	JEONG.Y.G	THERMAL LIMIT CURVE
			DWG. NO.	LMGC792B

A4(210X297)

SPARE PART LIST FOR INDUCTION MOTOR

SPEC : 1335KW 6P 3300V 60Hz THRUSTER

NO.	NAME	OUTLINE DWG.	Q'TY	REMARK
01	ROLLER B.R.G.	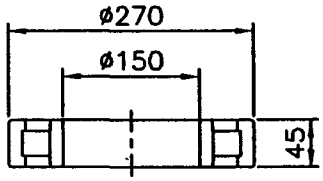	1EA/SET	NU230
02	ANGULAR CONTACT BALL B.R.G.	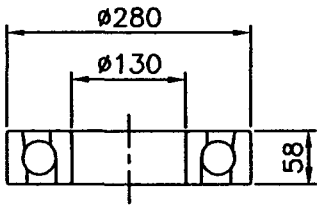	1EA/SET	7326B

INSTRUCTION MANUAL
FOR
INSTALLATION & MAINTENANCE
OF INDUCTION MOTOR

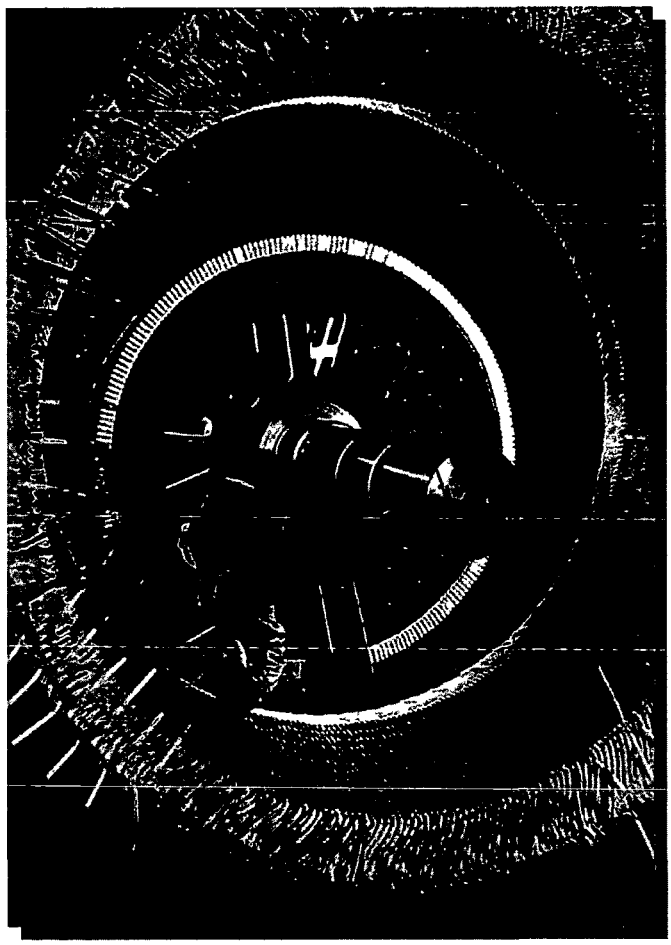

HYOSUNG CORPORATION

TABLE OF CONTENTS

CHAPTER	TITLE
1.	PRERACE
2.	TECHANICAL INFORMATION
3.	OPERATION MANUAL
4.	MAINTENANCE MANUAL
5.	HANDLING AND MAINTENANCE OF SLEEVE BEARING FOR INDUCTION MOTORS
6.	HANDLING AND MAINTENANCE OF BALL AND ROLLER BEARING FOR INDUCTION MOTORS

CHAPTER 1

PREFACE

- SCOPE -

This chapter defines validity of this instruction manual for operation and maintenance of Hyosung three phase induction motors.

CHAPTER 1

PREFACE

This INSTRUCTION MANUAL has been prepared for authorized personnel to be able to perform installation, operation, inspection maintenance and repair of Hyosung high voltage three phase induction motor SAFELY and PROPERLY.

(1) Hyosung high voltage three phase induction motors covered by three instruction are carefully constructed under the strict quality control condition which is assured that it has been performed properly throughout all Hyosung organization by that quality control.

(2) In order to provide safety and high-quality equipment, we are always seeking the manner, which can improve the design and method of production.

(3) However, the long trouble free service of equipment must depend on the adequacy of installation and maintenance to be preformed by the purchasers.

(4) The equipment, therefore, shall be installed, operated and maintained properly in accordance with requirements in this instruction manual, and any failure,accident or adverse condition shall be prevented and removed in advance.

(5) For safety precautions to protect the personnel from a possible injury, the equipment is provided with protective device and/or safety device whenever considered necessary. Beside, warning by the instruction manual, labels or warning plates is made to state necessary requirements for prevention of possible accident, such as requirements for work, items no to be done, and requirements for the safety operation of equipment.

(6)Any failure, damage, injury and accident caused by negligence of the warnings shall be purchaser's responsibility in all cases.

(7) All instruction given in this instruction manual do not intend to cover all details or variation in equipment nor to provide for every possible contingency to be met in connection with installation, operation, inspection or maintenance.

(8) Should further information be desired or should particular problems arise which are not covered sufficiently for purchaser's purposes, the matter should be refereed to the nearest Hyosung representatives.

(9) This instruction manual shall be kept so that it is available any time for the personnel who may perform installation, operation, inspection, maintenance and repair of the equipment.

(10) All data or in information containing green shall be treated as private and confidential, and shall not be copied, or Disclosed by any means in technical papers or elsewhere without the provides consents in writing of Hyosung Corporation.

CHANGWON PLANT HYOSUNG CORPORATION
BLOCK A-1 CHANGWON INDUSTRIAL COMPLEX
NAEDONG, CHANGWON, KOREA 641-050
TEL. (055) 268-9680~5
FAX. (055) 268-9695

CHAPTER 2

TECHNICAL INFORMATION

- SCOPE -

This chapter defines validity of this instruction manual for operation and maintenance of Hyosung three phase induction motors.

TABLE OF CONTENTS

SECTION

2.1 Receiving, Handling and Storage

2.1.1 Receiving of Package

2.1.2 Handling of Package

2.1.3 Storage of Package

2.2 Preparation of Installation

2.2.1 Method of Foundation and Type of Foundation Bolt

2.2.2 Mounting Procedure of Motor Base

2.3 Tolerances of Installation and Alignment

2.3.1 Tolerance of Installation

2.3.2 Tolerance of Alignment

2.4. Tightening Torque of Bolt and Nut

2.4.1 Tightening Torque of Bolt and Nut

2.5 Lubricant

2.5.1 Grease

2.5.2 Oil

2.1 RECEIVING, HANDLING AND STORAGE

2.1.1 Receiving of Package

The motor should be examined on arrival and any damage reported promptly to the nearest representative of Hyosung. Check carefully with the details given in the packing list.

Particularly check the small items, which are liable to be over-looked, such as mounting bolts etc.

2.1.2 Handling of Package

The motor should be lifted by the lugs or the lifting eyes provided.

When there are no lifting facilities available ii is recommended to use strong wooden roller or a tripod. When lifting the package by crane, the wire ropes must be placed so as to lift at its center of gravity. Special care must be taken not to damage parts such as the shaft journal, windings and etc.

Before unpacking, when the moisture contents of the air is very high, allow sufficient time for the temperature of the package to reach ambient conditions to avoid condensation occurred.

2.1.3 Storing of Package

When the package is to be stored, select a dry location having good ventilation and protection form rain and direct sunlight.

Especially, avoid places where the temperature is likely to drop suddenly and cause moisture to condense on finished surfaces. At all times should such condensation occur it must be removed immediately with dry cloth otherwise corrosion will result.

If the storage period exceed three months(The reservoirs of oil lubricated bearing housing should be filled,) the rotor shall be turned a few times a month by hand periodically.

The finished surfaces of the machine are coated with anti-corrosives or grease. If the anti-corrosive has off, the surface must be cleaned, dried and anti-corrosive applied again.

2.2 PREPARATION OF INSTALLATION OF THE MOTOR

2.2.1 Method of foundation and type of foundation bolt

(a) Method of foundation

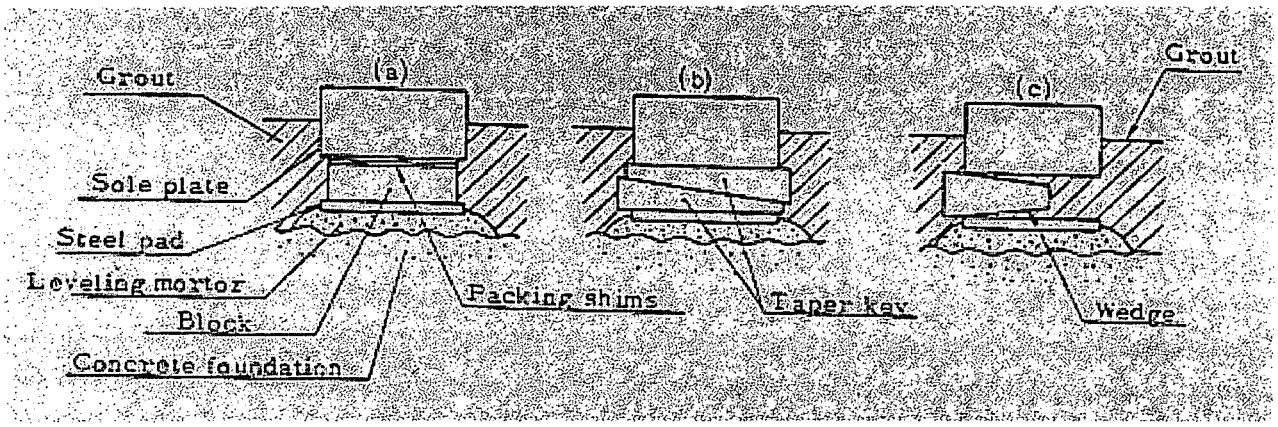

(b) Type of foundation bolt

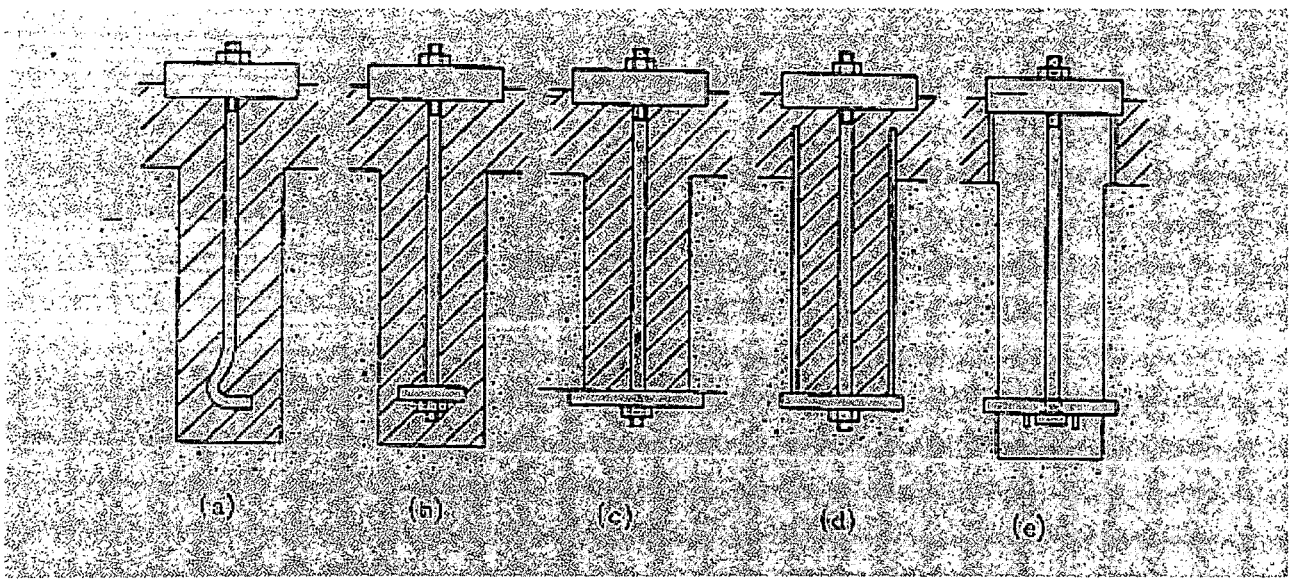

2.2.2 Mounting procedure of motor base

Motor sole plates or motor base shall be mounted on the foundation by the following procedure and record of alignment shall be kept.

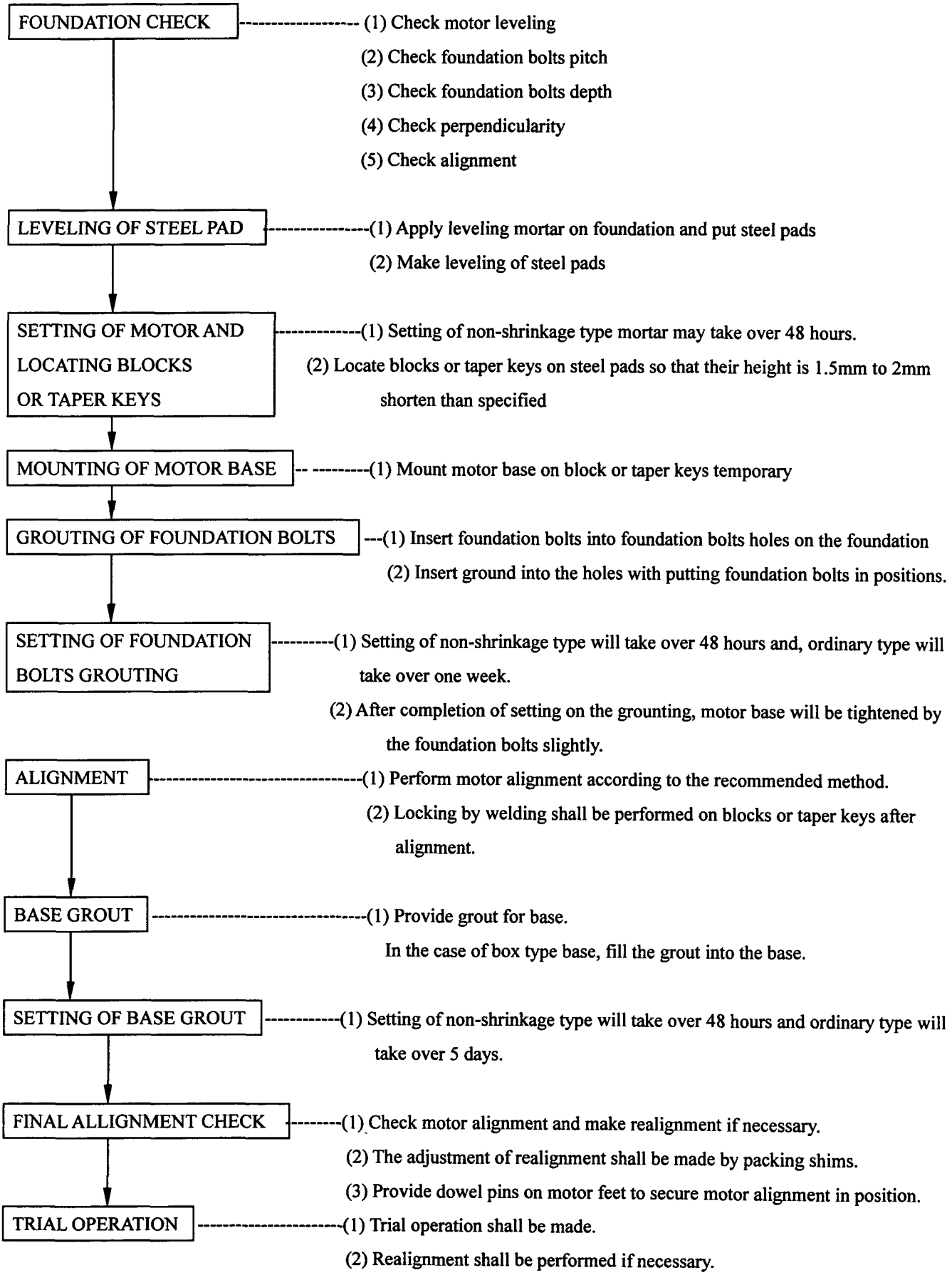

2.3 TOLERANCES OF INSTALLATION AND ALIGNMENT

2.3.1 Tolerances of Motor Installation

The Horizontally of the base and the motor should be less than

$$\frac{0.05\text{mm/m}}{(0.6\times10^{-3}\ \text{Inch/Ft})}$$

2.3.2 Tolerance of motor alignment

Tolerance of motor alignment shall be in according with TABLE(i)

TABLE(i)

Eccentricity between half couplings	Parallelism between faces of half couplings
Within 0.05 mm (1.96×10^{-3} Inch)	within 0.05 mm (1.96×10^{-3} Inch)

The tolerance above shall be checked periodically, preferably once per month.

2.4 TIGHTENING TORQUE OF BOLT AND NUT

2.4.1 Tightening torque of bolt and nut

Tightening torque of bolts and nuts shall be in accordance with TABLE (I) OR TABLE (II)

TABLE (I) Standard tightening torque (metric)

Standard size bolt and nut	Standard tightening torque	
W 3/8 (M10)	200(kg-cm)	14 (Ft-lb.)
W1/2 (M12)	460(kg-cm)	33(Ft-lb.)
W5/8 (M16)	960(kg-cm)	69(Ft-lb.)
W3/4 (M20)	1,750(kg-cm)	126(Ft-lb.)
W7/8 (M22)	2,750(kg-cm)	198(Ft-lb.)
W1 (M24)	4,120(kg-cm)	297(Ft-lb.)
W1 1/4 (M30)	8,230(kg-cm)	595(Ft-lb.)

-NOTE-

(1) Tolerance of tightening force is ±20% .

(2) Bolt size given in parenthesis indicates the ISO standard bolts.

TABLE (II) Standard Torque (unified)

Authorized bolts and nut	standard tightening torque	
3/8 – 16 UNC	215(kg-cm)	15(Ft-lb.)
1/2 – 13 UNC	510(kg-cm)	36(Ft-lb.)
5/8 – 11 UNC	1,000(kg-cm)	72(Ft-lb.)
3/4 – 10 UNC	1,780(kg-cm)	128(Ft-lb.)
7/8 – 9 UNC	2,850(kg-cm)	206(Ft-lb.)
1 – 8 UNC	4,260(kg-cm)	308(Ft-lb.)
1 1/4 – 7 UNC	8,800(kg-cm)	636(Ft-lb.)
1 1/2 – 6 UNC	14,700(kg-cm)	1060(Ft-lb.)
1 3/4 – 5 UNC	23,600(kg-cm)	1700(Ft-lb.)

2.5 LUBRICANT

2.5.1 GREASE

1) Name and manufacturer

Recommended grease and the name of manufacturer are shown in following table.

Item	Name of Grease	Name of manufacturer	Soap Type(Base)	Dropping Point	Cone Penetration at 25 °C	Useable Temperature Range
1	SHELL Alvania NO.2	SHELL OIL	Li	190 °C	277	-20 °C ~120 °C
2	Mobilux EP2	MOBIL	Li	Above 170 °C	265~295	-20 °C ~130 °C
3	MULTIFAK NO.2	CALTEX	Li	200 °C	278	-29 °C ~121 °C

*Notes: Li = Lithum

2) Replenishing interval and quantity

Recommended replenishing interval and quantity is shown name plate.

Number of Bearing	Initial Pouring Quantity	Replenishing	
		Interval	Quantity

2.5.2 OIL

1) Name and manufacturer

Recommended oil and the name of manufacturer are shown in following table.

COMPARISION TABLE OF LUBE OIL

Item	Name of Oil	Flashing Point	Viscosity Centistokes		Pour Point	Equivalent Oil			Use
			50 °C	80 °C		SHELL OIL	MOBIL OIL	CALTEX OIL	
1	Turbine Oil ISO VG32	Above 180 °C	20 ± 2.5	Above 7.5 * 80 ± 10	UP to –7.5 *Above 45	Shell Turbo T32	DTE Oil Light	Regal Oil R & O #32	For 2 pole Horizontal or Vertical Motor
2	Turbine Oil ISO VG46	Above 180 °C	35 ± 2.5 * 145 ± 10	Above 11.0 * Above 56	Up to - 5 °C	Shell Turbo T46	DTE Oil Medium	Regal Oil R & O #46	For 4 Pole and above Horizontal or Vertical Motor
3	Turbine Oil ISO VG68	Above 180 °C	45 ± 2.5 * 185 ± 10	Above 12.5 *Above 60	Up to - 5 °C	Shell Turbo T68	DTE Oil Heavy medium	Regal Oil R & O #68	〃

Notes : * Redwood No. 1 Second

CHAPTER 3

OPERATION MANUAL

- SCOPE –

This chapter describes information of operation for three-phase induction motor

TABLE OF CONTENTS

SECTION

3.1 Inspection Before Starting

3.1.1 Inspection Before Starting

3.1.2 Load Condition

3.1.3 Inspection at running

3.1.4 Rotating Direction

3.1.5 Limiting of starting frequency

3.2 Cautions at Operation

3.2.1 Limitation of Voltage, Current and Frequency Regulation

3.2.2 Cautions for Vibration and Noise

3.2.3 Recommended Setting Values

3.3 Cautions at Stoppage

3.3.1 Cautions at Stoppage

3.1 INSPECTION BEFORE STARTING

3.1.1 Inspection Before Starting

Inspection before trial starting shall be made according to the following procedures, (1) to (11).

For the second and further starting, procedure (8) to (11) are required.

(1) All connection and cable type and size are as specified.

(2) All connection are tight and any required insulation, taping or bracing, has been done correctly

(3) Check that motor frame and all terminal boxes are correctly earthed.

(4) Confirm that setting of all overloads relays is correct. Setting with 100% to 105 % is recommendable, but not exceed 110% of normal rated current of the motor. Time delay setting for starting should also be adjusted for starting duty and locked rotor condition.

(5) Check alignment of the motor.

(6) Confirm correct operation of starting and control equipment.

(7) Using suitable megger, measure insulation resistance and confirm that the value exceeds that obtained from following equation.

$$\text{Insulation Resistance} = \frac{\text{Rated Voltge(V)}}{\text{Rated Output(KW)} + 1000} \ (\text{M}\Omega)$$

(8) Confirm condition of driven machine and that all controls are in the start position.

(9) Confirm that all ventilation openings and ductwork are clear and that all bolts and nuts are tightened.

(10) Check Oil level for oil lubricated bearing and oil flow rate for forced oil lubricated bearing.

(11) Check flow rate of cooling water for water-cooled bearing and/or motor with air to water cooler.

3.1.2 Load Condition of Trial Start

It is advisable to start the motor being uncoupled, to confirm that the motor itself is in sound condition. The motor is then stopped and coupled to the load and restarted. The load should be reduced to the lowest limit as possible as and then increased gradually to normal condition.

3.1.3 Inspection at running

(a) Immediately after starting, check that the oil – rings of sleeve bearing are turning freely and quietly.
(For motor with oil-ring)

(b) Check rotating direction.

(c) Confirm that motor runs quietly without abnormal noise.

(d) Confirm motor runs smooth without abnormal vibration.

3.1.4 Rotating Direction.

An Arrow indicating the direction of rotation is attached on the stator frame. Confirm direction of rotation.

If incorrect, stop the motor immediately and check connections of power supply.

3.1.5 Limiting of starting frequency

Unless otherwise specified, the motor is capable of

a) Two consecutive starts from *cold condition.

Or

b) One start from *hot condition, and one or two starts in a day is recommended. Must not start more than specified

* Cold condition: the motor is ambient temperature.

Hot condition: the motor is running with load more than approximately 2hours.

3.2 CAUTIONS AT OPERATION

3.2.1 Limiting of Voltage, Current and Frequency Regulation

Variations from rated voltage may occur within plus or minus 5%.

Variations for rated voltage may occur within the range of 90~110%.

The simultaneous voltage and frequency variations shall be assumed to be of the same sign.

The current value at rated load, voltage and frequency is inscribed on the nameplate.

The motor must not be operated when the variations exceed more than values described above.

3.2.2 Cautions for Vibration and Noise

Usually the motor under operating condition has vibration and/or noise. The motor operator must pay attention to the vibration and noise as same as voltage, current and frequency because they art most apparent sign of unusual matter.

3.2.2.1 Vibration

The vibration of motor is classified as follows.

(a) Forced vibration ... unbalanced coupling, foundation or reciprocal force and etc.

(b) Free vibrations by shock ...shock jotting and etc.

(c) Self-exciting vibration ...friction, surging and etc.

If abnormal vibration occurred, search the cause.

The considerable causes of vibration are listed up as follows.

(1) Vibration at no load uncoupled condition

(a) Unbalance of rotor

(b) Uneven air gap length

(c) Single phase operation

(d) Shorting between coils or phases

(e) Bad bearing or bearing condition

(f) Unbalance of coupling

(g) Unusual contact with rotating part

(h) Bending of shaft

(i) Poorness of foundation and installation

(j) Looseness of rotor mounted part

(2) Vibration at no load coupled condition

(a) Remaining unbalance.

(b) Looseness of foundation bolt or mounting bolt of stator frame.

(c) Gap between base and foundation or gap between base and stator frame.

(d) Resonance with foundations

(e) Poorness of alignment

(f) Uneven sinking of foundation.

(g) Critical speed of shaft system

(h) Coupling connecting method

(i) Bending of shaft

(j) Vibration transmitted from driven machine

(3) Vibration which changes with load condition

(a) Looseness of rotor fitting part

(b) Unevenness of air gap

(c) Unbalance of magnetic center between stator and rotor

(d) Cracking of rotor bar and/or enduring

(In the case of cage type rotor)

(4) Another causes

(a) poorness of coupling fitting to shaft

(b) Poorness of bearing mounting to bracket

(c) Porn's of bracket mounting to stator frame

3.2.2.2 Noise

Noise is classified roughly into windage noise and magnetic noise.

The windage noise is induced by rotation of rotor and cooling fan without relation to load condition.

The magnetic noise varies with load condition and disappear when power supply is switched off.

3.2.2.3 Recommended Setting Values

Followings are typical alarm setting values for various detector of motor

.TYPE	RECOMMENDED ARARM	SETTING POINTS TRIP
Embedded Temperature Detector for Winding		
at B class rise	130 °C	140 °C
at F class rise	150 °C	160 °C
Temperature Detector for Coil End		
at B class rise	120 °C	130 °C
at F class rise	140 °C	150 °C
Temperature Detector for Bearing	90 °C	95 °C
Flow Detector of Cooling Water	High point 110 % of rated Low point 70 % of rated	55%
Flow Detector of Forced Bearing Oil	High point of 110 % of rated Low point of 70% of rated	55%
Pressure Detector of Forced Bearing Oil	Ditto	ditto

Above setting values are based on ambient temperature at 40 °C .

3.3 CAUTIONS AT STOPPAGE DUE TO POWER FAILURE

3.3.1 Cautions at stoppage due to power failure

Confirm that positions of associated equipments such as starter and secondary resistor etc arc being in turned off position whenever after power failure.

CHAPTER 4

MAINTENANCE MANUAL

- SCOPE –

This Chapter describes maintenance information for three-phase induction motor.

TABLE OF CONTENTS

SECTION

4.1 Periodical Inspection
4.1.1 Inspection Points
4.1.2 High Potential Test
4.1.3 Insulation Resistance
4.2 Trouble Shooting
4.3 Renewal Parts
4.4 Caution for Lifting and Disassembling

4.1 PERIODICAL INSPECTION

4.1.1 Inspection Points

Generally three type inspections shall be carried out

(a) Routine Inspection .....to inspect for the presence of abnormal matter

(b) Monthly Inspection ..... to inspect cleans and repairs without disassembling

(c) Yearly Inspection .....to inspect, clean and repair with disassembling

Followings are typical inspection points

Inspection Parts	Routine Inspection	Monthly Inspection	Yearly Inspection
STATOR	1. Measurement and record of Voltage,Current, Vibration, Temperature of stator frame, Temperature of outlet air, Ambient temperature and Moisture. 2. Number of starts. 3. Presence of explosive gas or Corrosive gas.	1. Measurement and record of Insulation Resistance. 2. Measurement and record of air gap. 3. Draining of water	1. Removal of dust 2. Looseness of stator core. Looseness of slot wedge. 3. Measurement of insulation resistance before and after Disassembly. 4. Inspection of coil surface.
ROTOR			1. Looseness of core damage of teeth 2. Removal of dust. 3. Looseness of bolts
(cage type)			1. Deformation of the rotor bar and enduring.
(wound type)			1. Measurement of insulation resistance before and after disassembly. 2. Looseness of soldering at the coil connection.
BEARING	1. Noise 2. Vibration 3. Temperature	1. Retightening for bolts and nuts.	1. Damage on the bearing
(ball & roller type)		1. Greasing up	1. Washing and inspection
(sleeve type)	1. Rotating condition of oil ring (if used) 2. Presence of oil leakage. 3. Lubricating condition and oil pressure (forced lub) 4. Oil level of oil gauge. 5. Water pressure (water cooled)	1. Extent of turbidity in Lubricating oil and abrasion.	1. Abrasion 2. Cleaning the oil box.
SLIPRING - & BRUSH HOLDER (wound type)	1. Pressure of sparks from the brush. 2. Wearing of the brush.	1.Wearing of the slip ring and the brush. 2. Wearing of the short circuit device. 3.Cleaning of the short circuit device.	

4.1.2 Insulation Resistance

When a motor is idle for a long period, the insulation of the winding may absorb moisture and the insulation resistance will drop. Before starting the motor, check that insulation resistance is higher than the value obtained from the following equation using a suitable megger. If the resistance below the calculated value, the motor winding must be dried out.

$$\text{Insulation resistance} = \frac{\text{Rated Voltage(V)}}{\text{Rated output (KW)} + 1{,}000} (\text{M}\Omega)$$

4.1.3 High Potential Test

High Potential Test on all motor will be made at manufacturer's plant. Therefore, when high potential test will be carried out at site, the voltage shall be 1.5 times of rated voltage E or less for the motors whose rated voltage is less than 7000V or 1.25E or less for the motors whose rated voltage is more than 7000V for 1 minutes. Measurement of the insulation resistance using a suitable megger shall be carried out before high potential test.

Charging current may flow right after commencement of high potential test, so do not confuse this current as break down current.

Sudden increase in primary current together with drop of secondary voltage indicates that the insulation has broken down. This can be confirming by using the megger. Insulation resistance will be vary low or zero.

4.2 TROUBLE SHOOTING

Should any trouble occur, stop the motor immediately. Check the motor according to the tables below, and corrective action shall be taken properly.

Table 1. Troubles and their countermeasures of the motor

Table2. Troubles and their countermeasures of anti-friction bearing

Table 3. Troubles and their countermeasures of sleeve bearings

Table 1.

Troubles and their countermeasures of the motor

Phenomena		Cause	Countermeasures
Motor cannot Start	Power supply system	1. Low voltage	Check with voltmeter
		2. Large voltage drop	Voltage variation before and after starting at output terminal of starter Same for motor terminal.
		3. Broken circuit or unbalanced voltage	Repair where broken
	Starter	4. Faulty connection	ditto
		5. Faulty contact	ditto
		6. Low voltage	Use high voltage tap
		7. Broken cable or unbalance starting resistance	Measurement of resistance
	Motor	8. Broken stator or rotor windings	Measurement of resistance or current
		9. Misconnection of stator windings	Repair where broken
		10. Faulty rotor	a. Broken bars b. Broken coils c. Replace with new one or repair
		11. Rubbing rotor core with stator	a. Check by rotating by hand b. Check by disassembly
		12. Faulty bearings	
		13. Starting torque low	a. Check voltage at motor terminal during starting b. Check external resistance
	Load	14. Overload	Reduced load

Phenomena		Cause	Countermeasures
Long acceleration time		1. Low voltage	Check voltage drop
		2. Faulty rotor	a. Check connection between bars and end-ring. b. Check unbalance of rotor coils
		3. Overload or starting torque low	Check loading condition and terminal voltage during starting.
Louder Noise		1. Unbalance air-gap length due to wearing of bearing	Find cause of unbalance
		2. Unbalance secondary circuit	a. Measurement of resistance of rotor coil b. Check contact of slip-ring device
		3. Resonance loosen component	Tightening of bolt and nut
		4. Single phase operation or voltage unbalance.	a. Investigate cause of broken circuit b. Arrange loading of electrical system
Unbalanced phase current		1. Voltage unbalance 2. Single phase operation 3. Unbalanced secondary circuit	ditto Repair where broken a. Measurement of winding resistance of rotor b. Check contact of slip-ring device c. Check connection of end ring
Wrong direction of rotation		Reverse phase rotation due to misconnection	Reconnect power supply cables with exchange each others at motor terminals or at starter terminals.
Overheating of motor		1. Overloading	Decrease load down to rated load
		2. Increasing motor current due to voltage drop	a. Check the voltage and increase system voltage b. Decreased load
		3. Over excitation of magnetic due to high voltage.	Check the voltage and decrease system voltage
		4. One Phase broken or faulty contact	Repair where faulty
		5. Short circuit or grounding of windings	a. Measurement of resistance and current b. Repair where faulty
		6. Contact of rotor core to stator	a. Investigation of cause by the noise, shaft bend and bearing etc. b. Repair where faulty.
		7. Blockage of air paths due to accumulation of dust	a. Perform cleaning

Phenomena		Cause	Countermeasures
Overheating bearing		1. Over tension of belt	Decrease tension
		2. Faulty engage of gears	Make realignment
		3. Faulty alignment	Make realignment
		4. Large vibration	Adjustment of vibration by means mentioned below
		5. Faulty installation or sinking foundation	Adjustment of foundation
		6. Shaft bend	Repair
		7. faulty Bearing	Replace with new bearing
		8. Aging of grease	Replace with new grease
		9. Inproper grease quantity	Put grease into bearing for at the ratio of 40～50% of the internal volume
		10. Thermal transmission from other	Provide thermal insulator
Vibration		1. Changing as function of year	Make balancing
		2. Faulty of foundation	Strengthen foundation
		3. Faulty of alignment	Realignment
		4. Unbalance of coupling	Make balancing
		5. Uneven loading	Make balancing the load
		6. Single phase operation	a. Investigate cause of broken circuit b. Arrange loading of electrical system
		7. Broken coil rotor or uneven contact of carbon brush	a. Repair where broken b. Fitting of carbon brush

Table 2.

Troubles and their countermeasures of anti-friction bearing

Phenomena	Appearances	Cause	Countermeasures
Flaking	a. Flaking of rolling element	1. Excessive interference	1. Proper manufacturing and assembly
		2. Improper selection of internal bearing clearance	2. Reconsideration of clearance
		3. Negative running internal clearance	3. Mounting with proper clearance
		4. Heat expansion	4. Check of operation condition
	b. Local flaking on raceway truck	In grease of Foreign matters rust or bruises etc.	
	c. Widespreaded flaking on raceway truck		
	d. Flaking on the diagonal portions of raceway truck	1. Elliptical deformation of shaft or bearing box	Reconsideration of manufacturing accuracy and tightening force
		2. Loose tightening	
		3. Inferior manufacturing accuracy	
	e. Widespreaded flaking	4. Aging deformation abnormal thrust load	Reconsideration of bearing design
	f. Flaking across raceway truck	1. A bend of shaft	
		2. Inclined mounting of inner and outer rings	
	g. Flaking at an interval of rolling elements pitch on raceway truck	1. Vibration during stoppage	1. Check of operation condition
		2. Rust	
Seizure	a. Change of color or softening of bearing rings of rolling elements	1. Too narrow clearance	1. Check of proper clearance
		2. Poor lubrication	2. Check of quantity and type of lubricants
	b. Damage	3. Improper lubricants	3. Check of operation condition
		4. Overload	
Crack Splitting Break	a. Crack of splitting	1. Shock or growth of hitting flaking	1. Careful handing
	b. Break	2. Excessive interference Improper chamber	2. Check of interference
			3. Check of manufacturing accuracy of shaft and bearing box

Phenomena	Appearances	Cause	Countermeasures
Damage of a cage	a. Break b. Partial wear c. Wear of cage pocket d. Scuffing	1. Momentary load 2. Excessive high speed 1. Poor lubrication 2. Ingress of foreign bodies	1. Careful handling and check of operating condition 1. Check of quantity and type of lubricants
Rust	a. Widespreaded rust on bearing surfaces b. Partial rust c. Contact erosion on fitting surface	1. Poor storage 2. Improper cleaning 3. Improper anti-rust oil 1. Insufficient packing 2. Moisture 1. Poor interference 2. Fluctuating load	1. Check of method of place for storage 2. Check of anti-rust oil 1. Check of interference 2. Check of operating condition
Abrasion	a. Excessive abrasion of race-way and/or rolling elements b. Abrasion of cage	1. Ingress of foreign matters into lubricants 2. Rust Poor lubrication	Check of quantity and type of lubricant
Electrical corrosion	Craters or waving ridge mark	Shaft current through bearing parts	Check of bearing insulation
Indentation	a. Hollows b. Pitting c. Shock bruise during transportation d. Shock bruise during assembly	Rolled foreign matters Between raceway and rolling Elements Careless handling Careless handling	Check of working condition Careful handling Careful mounting
Smearing	Scuffing(small seizure) on raceway and/or rolling elements	1. Poor lubrication 2. Improper selection of lubricant 3. Skewing of rolling elements	Check of lubricants and lubricating condition
Creep	a. Abrasion of inside and/ or outside of surface b. Change of colour of rolling surface	1. Insufficient interference between fittings 2. Poor tightening of sleeve	1. Check of tightening force 2. Check of manufacturing accuracy of shaft and bearing box

Table 3.

Troubles and their countermeasures of sleeve bearings

Phenomena	Appearances	Causes	Countermeasures
Heat Seizure	a. Abnormal temp. increase or over-heat b. Scuffing c. Seizure	1. Inadequate contact of bearing or poor oil film 2. Poor lubrication, deterioration and contamination of lubricants 3. Deformation of oil-ring Excessive slip 4. Over-load of metal or misalignment 5. Abnormal thrust load 6. Ingress of foreign bodies	1. Scraping of metal surface 2. Oiling, replacement of lubricants, check of oil viscosity 3. Check of the dimension, modification or replacement of related parts 4. Check of alignment and end play 5. Check of alignment and end play 6. Clean-up and scraping
Abrasion	a. Abnormal abrasion of white metal b. Wear of journal c. Wear of oil-ring d. Oil contamination	1. Abrasion by foreign bodies 2. Over-load, misalignment 3. Frequent start-stop under high load 4. Critical or poor lubrication 5. Vibration of shaft, oil-whirl 6. Abnormal thrust 7. Fretting wear	1. Clean-up, flushing 2. Check of alignment 3. Check of operating condition, and oil viscosity 4. Check of oil pressure and volume 5. Check of shaft balance or bearing design 6. Check of alignment and endplay 7. Prevention of vibration
Flaw Streak Damage	a. Flaws on metal surface b. Crack, split, breakage c. Strip of lining	1. Mis-assembly, Mis-manufacturing 2. Shaft vibration 3. Fatigue breaking 4. Ingress of foreign bodies	1. Proper assembly and manufacture 2. Rebalancing 3. Check of white metal material or increase of metal surface 4. Clean-up or scraping
Electrical corrosion	a. Pitting on metal surface b. Pitting on journal surface	Shaft current	Insulation of bearings or earthing of motor shaft

Phenomena	Appearances	Causes	Countermeasures
Fretting corrosion	a. Corrosion b. Wear of white metal or black metal c. Blackening or dirt on white metal surface by lubricants	1. Oxidizing or chemical corrosion 2. Shock, vibration , rattle 3. Rattle during transportation	1. Painting of anti-corrosion oil and exclusion of water(moisture) 2. Prevention of vibration, Check of fittings 3. Fixing of rotor
Erosion	a. Erosion in white metal b. Local wear of journal	1. Cavitation 2. Mixing of water and/or bubble 3. Improper curvature of inner diameter 4. Vibration	1. Replacement 2. Scraping 3. Rebalancing
Others	a. Oil leakage	1. Excessive oil quantity 2. Insufficient oil-seal function 3. Improper oil-seal construction	1. Proper oiling 2. Check and replacement of oil seal 3. Improvement of oil-seal construction

4.3 RENEWAL PARTS

When ordering parts, give description and state quantity of parts desired referring drawing, together the nameplate rating, model, and serial number of the motor

4.4 Caution for Lifting and Disassembling

During the transportation and the installation of the motor it shall be take care so that the motors do not incline more than 15 from the horizontal position.

Further more, if the stator is placed in vertical plane as very special case during the disassembling or cleaning, it shall be placed up ward the minding (series) connection side.

INSTRUCTIONS
FOR
HANDLING AND MAINTENANCE OF
BALL AND ROLLER BEARINGS

CONTENTS

1. General Precautions in Handling Ball and Roller Bearings.
2. Precautions in Transporting Rotary Machines with Ball and Roller bearings.
3. Construction of Bearing.
4. Fitting of Bearing.
5. Dismantling of Bearing.
6. Sounds of Bearing.
7. Operation and Inspection.
8. Washing.
9. Maintenance.
10. Storage.
11. Symbol to Denote clearance in Bearing.

INSTRUCTIONS
FOR
HANDLING AND MAINTENANCE OF
BALL AND ROLLER BEARINGS

This booklet gives the instructions for handling and maintenance of ball and roller bearings used mainly in motors and generators.

1. General Precautions in Handling

Ball and roller Bearings In handling bearings it is necessary to be conversant with the properties of dust and with the peculiar features of the bearings.

1.1 Dust

Approximately 10 to 50% of dust and dirt is sand, i.e. quartz sand that is harder than ordinary quenched steel. Should the particles of sand enter the bearings, they will rapidly cause excessive wear and abnormal noises and may possibly shorten the life of the bearings.

There are a great deal of fine dust particles, smaller than 10 microns in size, floating in the air. Though invisible to the naked eye, they have an undesirable effect on the bearings. Protection against dust and dirt, therefore, should always be kept foremost in mind in assembling, dismount-ing, replacing, maintaining and storing the bearings.

1.2 Bearings.

The bearings have the following special properties:-

(1) High degree of precision

Bearings must be treated as high precision parts.

(2) Material is extremely hard

Bearings are made extraordinarily hard so as to be able to withstand a great contact pressure that may be locally applied. Nevertheless, there is a danger of their being broken if subjected violent impact force. In addition, the life of bearings is apt to be shortened when their temperature exceeds 120℃

(3) The inner and outer races are thin

As the inner and outer races are made extremely thin so that the bearings are as compact as possible, any deformation or distortion of a shaft or housing will appear on the races.

(4) Susceptible to rusting

Bearings are susceptible to rusting and the rust is apt to spread. Special care is required in handling and storing the bearings.

(5) Easily injured by vibration when not in operation

When a stopped machine with ball or roller bearings is given a vibration by another machine, repeated sliding action is produced between the rolling surface and balls or rollers of the bearings. Sliding traces in the pitch of balls or rollers are occasionally marked on the rolling surface as illustrated in Fig. 1 and may cause abnormal noises and vibration. Bearings on machines in motion are not injured by a small vibration, but in case machines are out of operation, care must be taken so that they are given as little vibrations as possible.

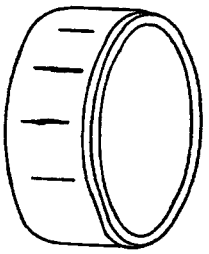

Fig. 1 Example of fretting corrosion.
This is apt to be produced on the rolling surface of the inner race of ball or roller bearing as wearing traces at the pitch of the ball or rollers.

2. Precautions in Transporting Rotating

Machines with Ball and roller Bearings

When rotating machines with ball and roller bearings are transported by rail or truck, it is rather frequent that corrosion trances (called as fretting corrosion) are produced on the rolling surface of the inner race due to minute lengthwise vibrations of the rotor. This phenomenon is especially remarkable in the case of roller bearings.

For the purpose of preventing this corrosion resulting from the sliding action, special metal clamp are attached, when dispatching rotating machines from the factory, to the ends of the shafts of the machines to suppress lengthwise vibrations of the rotor.

On such occasions when the rotating machines are displaced again after having been put, with these metal clamps removed, to a combination test with driven machines, be certain that the metal clamps used at the time of shipment from the factory are properly attached to the machines. For information concerning the way to attach them and the tightening pressure, refer to the caution tag fixed to the machines. It is recommended to check, upon receiving rotating machines, if metal clamps are attached to them.

3. Construction of Bearings

Bearing assemblies applied to horizontal motors and generators are classified two kinds of constructions.

1) Grease valve type
2) Semi-pack type

The typical constructions are shown in Fig.2 and 3.

The main difference in construction of both is if relief disc is consisted or not.

Bearing assemblies for vertical motors are classified thrust bearing and guide bearing.

Fig. 4 shows the construction of the guide bearing which roller bearing is applied.

Fig. 5 shows the typical construction of the thrust bearing which angular contact type bearing is applied. In case supporting external thrust, sometimes, double angular contact type bearing is applied as shown on Fig. 6.

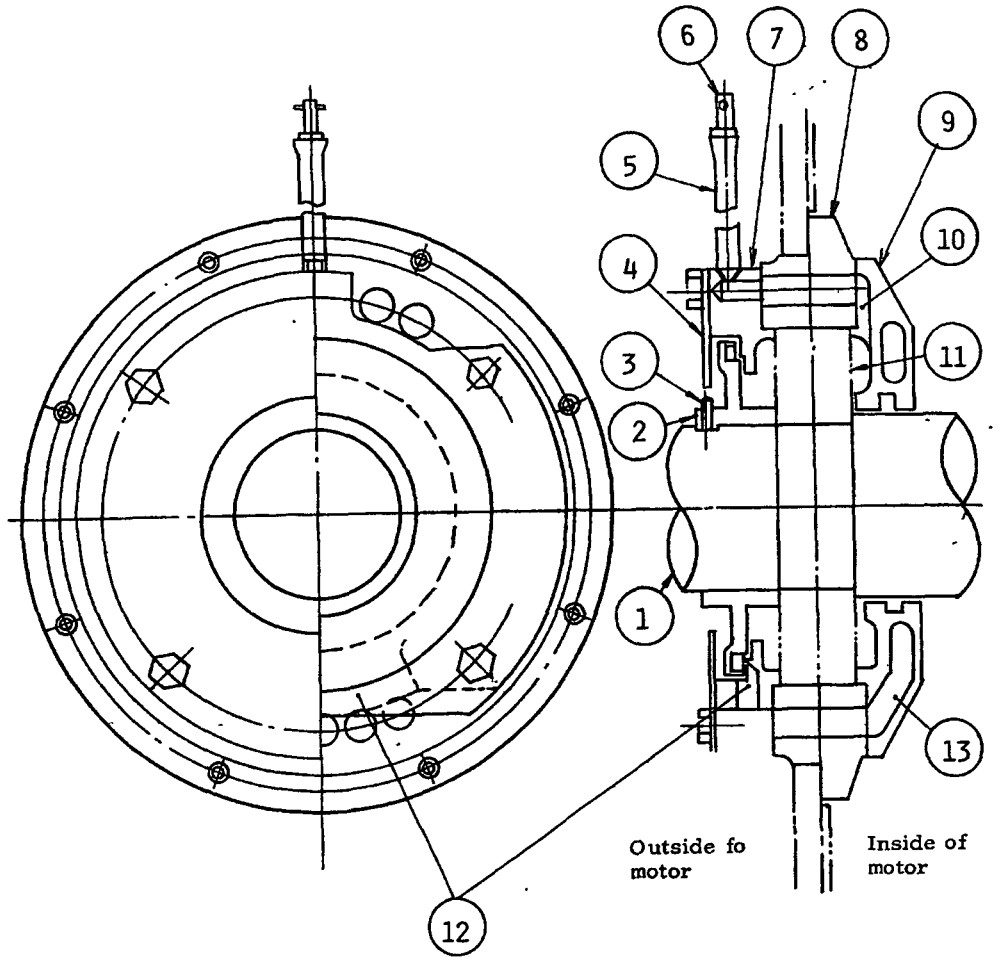

Item No.	Name of Part	Item No.	Name Part
1	Shaft	8	Bearing box
2	Relief disc	9	Internal bearing cover
3	Relief disc bolt	10	Grease path
4	Cover	11	Bearing
5	Grease pipe	12	Grease outlet
6	Grease nipple	13	Air chamber
7	External bearing cover		

Fig. 2 Construction of Grease-valve Type Bearing

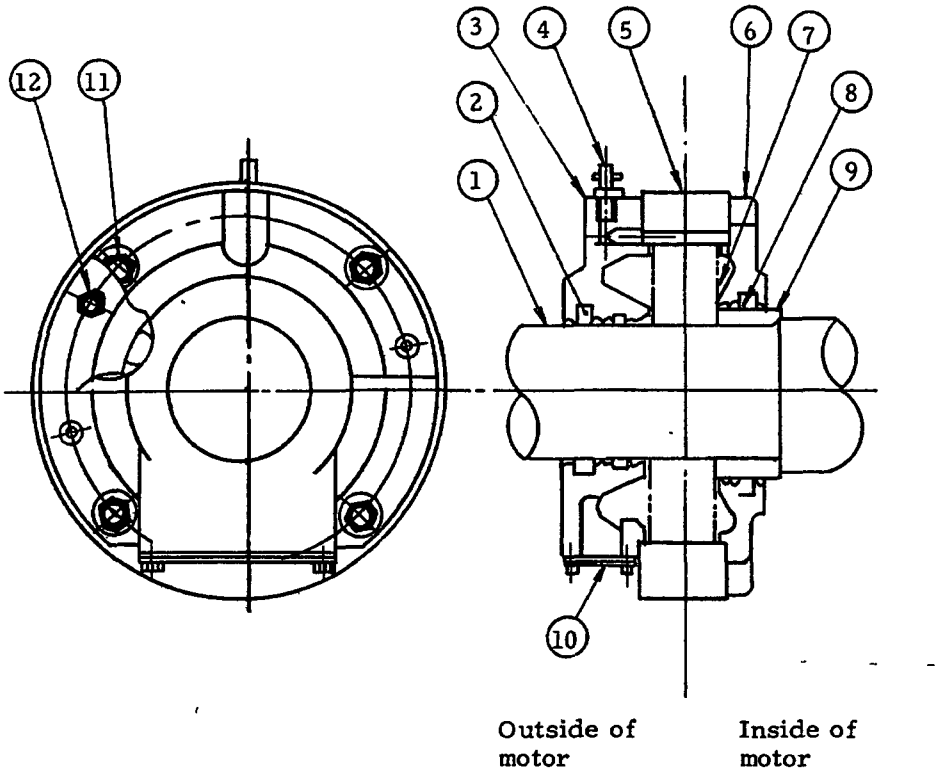

Item No.	Name of Part	Item No.	Name of Part
1	Shaft	7	Bearing
2	Cup grease	8	Cup grease
3	External bearing cover	9	Shaft collar
4	Grease nipple	10	Grease outlet cover
5	Bearing box	11	External bearing cover bolt
6	Internal bearing cover	12	Internal bearing cover bolt

Fig. 3. Construction of semi-pack Type Bearing

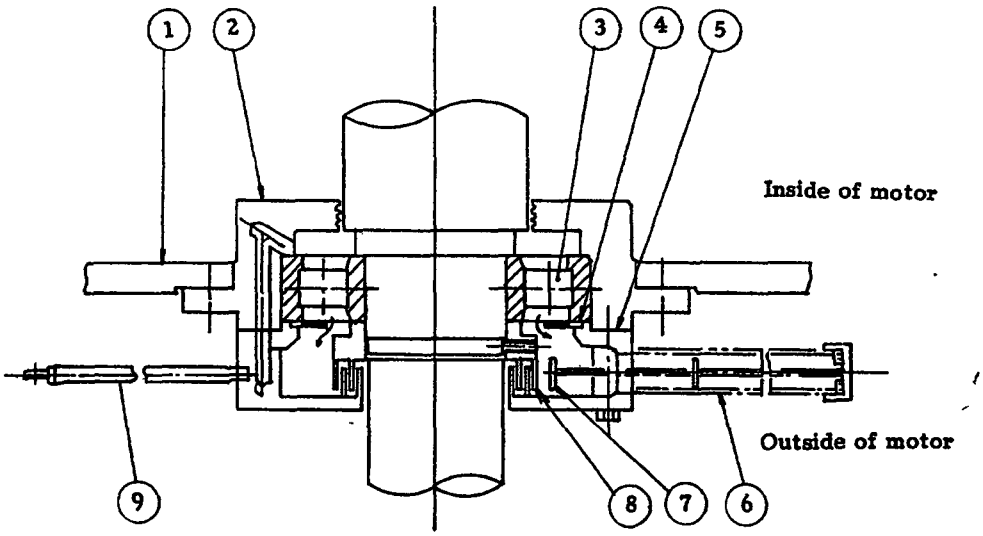

Item No.	Name of part
1	Lower bearing bracket
2	Bearing box
3	Roller bearing
4	Grease cover
5	Bearing cover
6	Grease outlet pipe
7	Grease drawer
8	Shaft collar
9	Grease inlet pipe

Fig. 4 Construction of guide bearing for vertical type motor

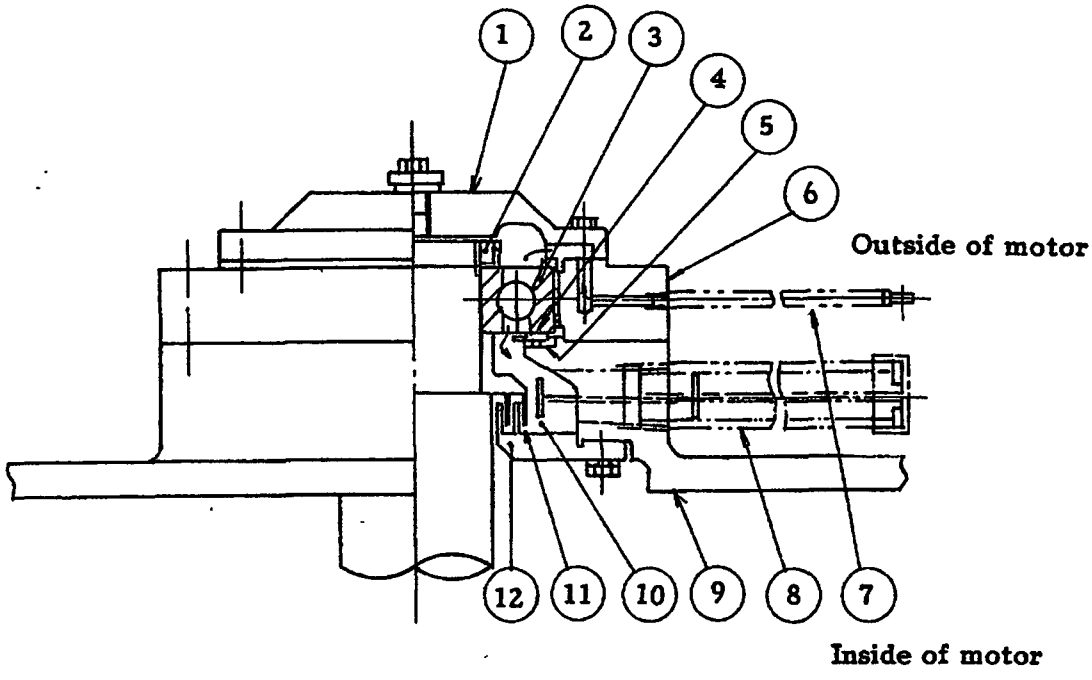

Item No.	Name of Part	Item No.	Name of Part
1	Bearing cover	7	Grease inlet pipe
2	Clamping ring	8	Grease outlet pipe
3	Single angular ball bearing	9	Upper bearing bracket
4	Grease cover	10	Grease drawer
5	Insulating plate	11	Shaft coller
6	Bearing box	12	Bearing cover

Fig. 5 Construction of thrust bearing for vertical motor

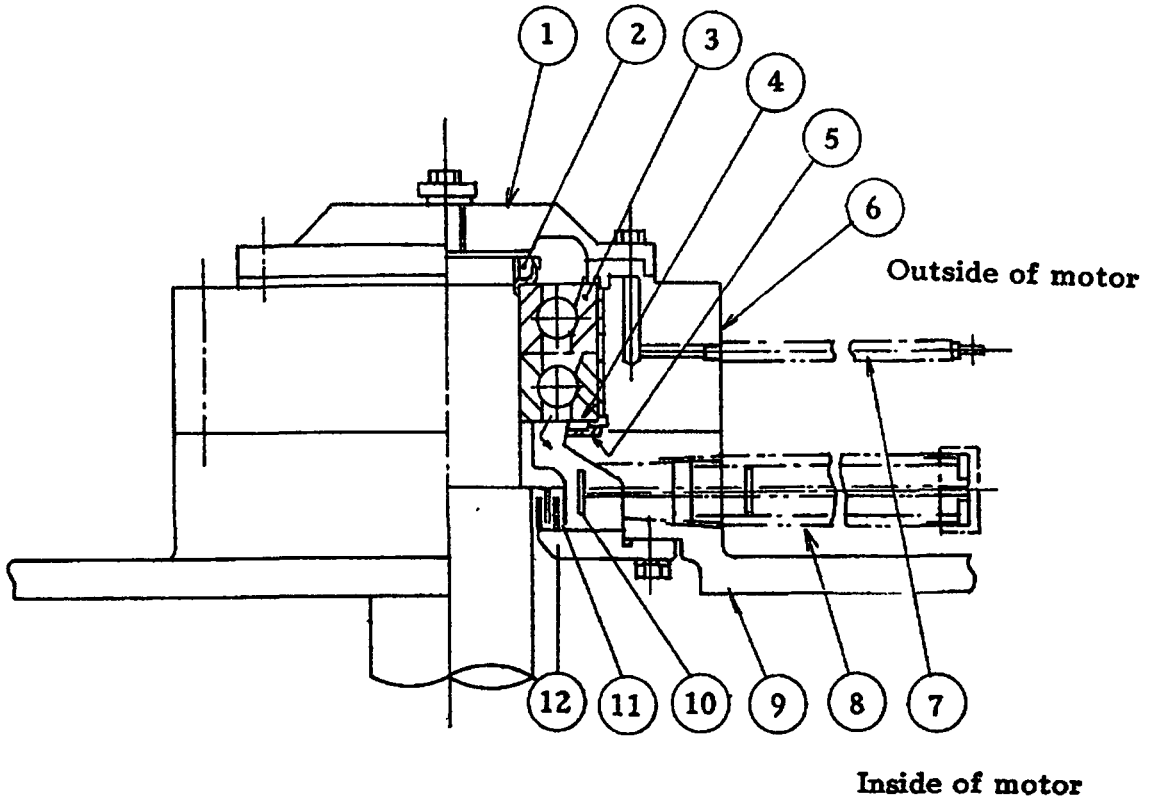

Item No.	Name of Part	Item No.	Name of Part
1	Bearing cover	7	Grease inlet pipe
2	Clamping ring	8	Grease outle pipe
3	Double angular ball bearing	9	Upper bearing bracket
4	Grease cover	10	Grease drawer
5	Insulating plate	11	Shaft collar
6	Bearing box	12	Bearing cover

Fig. 6 Construction of thrust bearing for vertical motor

4. Assembling of Bearings

4.1 Precautions before assembling

Before assembling bearings into a machine, it is necessary to measure the dimensions of the shaft and bearing box to make certain that the fit and perpendicularity are proper (on the occasion of repairing as well), and the assembly should be cone at a place free from dust and moisture.

Then, prepare materials and tools necessary for the fitting, such as cleansing oil (white kerosene is recommended), cleansing drum, clean cloth, white kerosene of high quality, drum for shrink fitting, thermometers, spanners, etc.

4.2 Replacement of ball or roller bearings

In case of replacement of ball or roller bearings, measure the diameter of the shaft, inside diameter of the bearing box and every part of the bearings. The standard dimensions of each part are given in Table 1. See if the surface of the shaft and the inside surface of the bearing box don't have any deformation, concave or convex. In case any deformation, concave or convex of more than 0.005mm is found, it is necessary to do machining.

Table 1(a) Tolerance of shaft at Bearing inner Race

Shaft diameter range (mm)		Tolerance of shaft at bearing inner race (Unit 0.001mm)			
		Ball bearing with bearing clamping type or roller bearing		Ball bearing without bearing clamping type	
Minimum	Maximum (inch)	Upper limit	Lower limit	Upper limit	Lower limit
6	10	+7	+1	-	-
10	18	+9	+1	-	-
18	30	+17	+8	-	-
30	40	+20	+9	-	-
40	50	+20	+9	-	-
50	65	+24	+11	+34	+21
65	80	+24	+11	+34	+21
80	100	+28	+13	+38	+23
100	120	+35	+14	+45	+33
120	140	+40	+15	+52	+37
140	160	+40	+15	+52	+37
160	180	+52	+27	+52	+37
180	200	+60	+31	+60	+41
200	225	+60	+31	+60	+41

Table 1(b) Tolerance of Bearing at Inner Diameter

Shaft diameter Range (mm)		Tolerance of bearing at inside diameter (Unit 0.001mm)			
		Ordinary class		High precision class	
Minimum	Maximum (inch.)	Upper limit	Lower limit	Upper limit	Lower limit
6	10	+3	-11	0	-8
10	18	+3	-11	0	-8
18	30	+3	-13	0	-10
30	40	+3	-15	0	-12
40	50	+3	-15	0	-12
50	65	+4	-19	0	-15
65	80	+4	-19	0	-15
80	100	+5	-25	0	-20
100	120	+5	-25	0	-20
120	140	+6	-31	0	-25
140	160	+6	-31	0	-25
160	180	+6	-31	0	-25
180	200	+8	-38	0	-30
200	225	+8	-38	0	-30

Table 1(c) Tolerance of Bearing Box at Bearing Outer race and Tolerance of Bearing at Outside diameter

Bearing box inside diameter range(mm)		Tolerance of bearing box at bearing outer race		Tolerance of bearing at inside diameter (Unit: 0.01mm)			
				Ordinary class		high precision class	
Minimum	Maximum (inch.)	Upper limit	Lower limit	Upper limit	Lower limit	Upper limit	Lower limit
18	30	+13	0	+2	-11	0	-9
30	50	+16	0	+3	-14	0	-11
50	80	+19	0	+4	-17	0	-13
80	120	+22	0	+5	-20	0	-15
120	150	+25	0	+6	-24	0	-18
150	180	+25	0	+7	-32	0	-25
180	250	+29	0	+8	-38	0	-30
250	315	+32	0	+9	-44	0	-35
315	400	+36	0	+10	-50	0	-40
400	500	+40	0	+12	-57	0	-45

Note: The above table applies to bearing boxes made of cast Iron or steel.

In the case of bearing boxes made of light metals or having thin walls, a tighter class of fits should be used.

4.3 Method of mounting

Before shrink fitting well-cleaned bearings, heat them in white kerosene or machine oil at 100° to 120℃ for 5 to 10 minutes, or for 20 minutes if they are large. After all the preparations have been completed, the shaft, bearing bracket and other parts should be cleaned and, first of all, the inner bearing cover should be mounted on the shaft. The bearing heated in white kerosene should be quickly mounted on the shaft. The bearing heated in white kerosene should be quickly mounted on the shaft and the clamping ring be screwed on without any loss of time so that the bearing can adhere closely to the shoulder part of the shaft, because the bearing contacts not only in diameter but in width when cooled.

When the bearing has cooled, turn the outer race by hand to make sure that it rotates lightly, and pull it toward you to make sure that it will not come off. After these checks, lock the clamp ring and gently mount the bearing box or the bearing bracket in place. Then, take exactly the specified grease and fill approximately one half to two thirds of the capacity inside the bearing cover.

5. Disassembling of Bearings

When it is required to disassemble the bearing, the first thing to do is to remove the outer bearing cover and learn in detail the actual construction of the bearing box, the type of bearing and the manner in which it is mounter. Especially the conditions of the fit should be closely examined and the bearing should never be dismounted forcedly. Before extraction of the bearing, take off the bearing box or the bearing bracket by means of an extracting tap or by other method.

The most important work is to dismount the bearing smoothly from the shaft. This work must be done by use of a bearing extracting tool as illustrated in Fig. 7.

Insert the bearing extracting tool firmly onto the side of the inner race and gently tighten the nut of the extracting bolt, and the inner race will gradually come out. In case the shaft and bearing are rusty, application of gasoline will facilitate the extraction.

The inner race of a large-sized roller bearing can be dismounted in the same manner. In case the fit is too tight, pour on the inner race oil heated to a temperature of 100° to 120℃ so that the temperature of the inner race may be raise, thereby making the dismounting easy. Be sure to heat the inner race only, because it is not effective if the temperature of the shaft is raised as well. In case the bearing is intended to be used again, it is strictly forbidden to strike it directly or to forcibly pull it out by the outer race only.

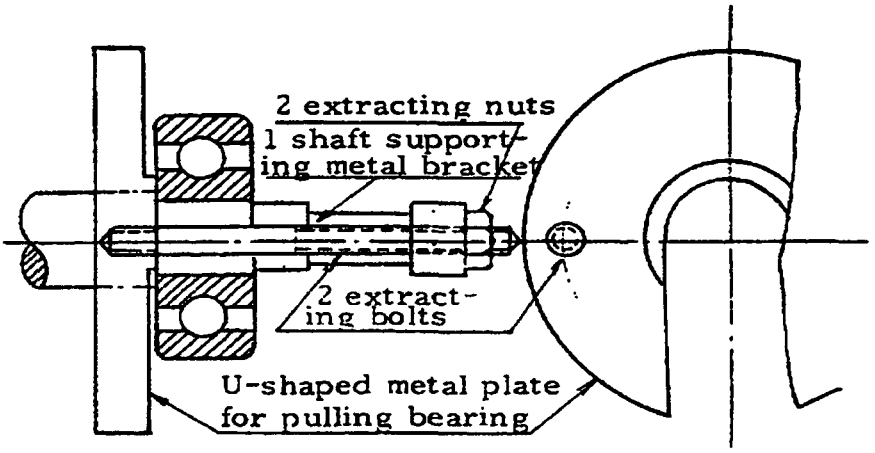

Fig. 7 Bearing Extracting Tool.

6. Sounds of Bearings

The simplest method of diagnoses the condition of bearings is to listen to sounds they make. Operators should pay constant attention to the bearing sound so that abnormalities can be discovered at an early stage.

Nevertheless, attention must be directed not only to sound but also to vibration as well as temperature lest bearings which are practically usable be judged defective.

As a tool used for the diagnosis, a special stethoscopic bar with a resonator attached to one end is available on the market, but a screwdriver or a simple metal bar can sufficiently serve the purpose.

With one end of the bar contacting the bearing cover and the other end in touch with the ear, listen to the sound.

If a stethoscopic bar with a resonator is used, care must be taken in determining the actual level of sound, because it is greatly amplified.

Typical sounds of bearings are enumerated in the following.

Refer to these descriptions in determining the condition of bearings and the remedial measures to be taken.

6.1 Normal sound

This is a metallic, clear, smooth, continuous sound.

The sound of ball bearings is hard and of a high frequency, while the sound of roller bearings is occasionally accompanied by a slight rumbling noise, which is no impediment to normal operation. The standard amount of grease should be supplied at the specified intervals.

6.2 Retainer sound

This is caused by balls or rollers rolling along with the retainer, and is a light, tinkling sound accompanied by an irregular metallic sound that has no relation to the number of revolutions. In most cases this sound is heard in bearings with large clearance used for high speed

machines, or even in bearings with ordinary clearance when rotating machines are run after having been left out of service with the bearings assembled in them. Should this sound be heard in rotating machines that have been in storage for long period of time, supply a small amount of the specified grease between the rollers or balls and the retainer. The sound will either cease or diminish by the application of grease, and even if it should not entirely cease,

it does not interfere with practical use of the machines.

6.3 Ball or roller dropping sound

This sound occurs, in horizontal type rotating machines, in relation to the clearance in the bearing in the radial direction and to the clearance between the retainer and the balls or rollers. Balls or rollers in no-load range near the top drop faster than the revolution of the retainer by the force of gravity and hit the retainer, thereby making sounds.

These sounds, therefore, are never heard during normal operation, but are heard when the rotating speed is rather low, especially just before machines are brought to a rest. Since these sounds are not abnormal as mentioned above the bearing is quite fit for use and should be maintained in just the same way as other ordinary bearings.

6.4 Squeak sound

Squeak is caused almost exclusively by roller bearings-especially by large-sized bearings with inside diameter of 90mm or more. This noise sounds, as the name indicator, like a harsh squeak or creak, and sounds so loud when it echoes against the end bracket or in a totally enclosed type housing.

This noise is caused by irregular movement of the rollers in no-load range that have nothing to do with the weight of the load. If is known that this noise is related to the clearance of bearing in the radial direction and to the condition of grease lubrication. In spite of the special care taken for the clearance, structure of the retainer and shape of the bearing box, this problem has not yet been completely solved.

Squeak is apt to occur when the condition of grease lubrication is not satisfactory; it is frequently heard when a machine which has been out of operation for a long time is run, especially during the winter time when the grease tends to stiffen. More often than not, squeak can be eliminated by supplying a small amount of grease of the specified quality between the roller and the retainer. This noise may sometimes recur during operation of the machine and in this case, too, replenishment of grease is recommended.

The occurrence of squeak does not always mean the inability of the machine to be operated, as long as there is no abnormal vibration or temperature. If the squeak is a slight one, the machine may as well be kept in operation as it is. If the squeak is a in operation as it is. If the squeak is a serious one accompanied by vibration, the bearing should be replaced.

6.5 Flaw noise

This noise occurs when there is a flaw or flaws on the rolling surface of the rollers or balls, and the frequency of the occurrence is proportional to the number of
revolutions.

This noise can be identified from the phenomena that it is accompanied by vibration during high speed revolution and the duration of the noise becomes longer just before cease of running. In some cases this can be discovered from the phenomenon that the noise is heard at a definite position when the rotor is turned slowly and carefully.

The cause of such flaws may be a defect originating in manufacture of the bearing or a defect caused during shop assembly or in transit.

The first two can be discovered during the test at the factory, but the third will not reveal itself until the trial run at site. In these cases, the bearing must be replaced.

6.6 Dirt noise

This noise is caused by dirt existing between the rolling surface and the rollers or balls. The magnitude of the noise varies irregularly with no relation to the number of revolutions. This noise can be eliminated by washing and thoroughly drying the bearing and by sealing new lubricating grease in it.

6.7 Other noises

C3 type roller bearings with large radial clearance are used on AISE and JEM motors, which are installed at places where ambient temperature is high or coupled with machines subjected to great shocks, in order to protect the bearings from being overheated and burning by giving them comparatively large interference for fit. In case motors equipped with C3 type bearings with large radial clearance are run singly, there are occasions when rollers make grazing noises, but, when motors are run equipped with couplings or coupled with machines, the rollers come into perfect rolling motion, thus abnormal noises disappear.

From our experience in practical use of C3 type bearings, it is known that the life and function of the bearings are not unfavorably affected at all and that the performance of the motors is not hampered.

7. Operation and Inspection

Before operating a machine, grease should be fed to the bearing in case the machine comes under the following conditions. Quantity of grease supplied must conform with caution plate. Table 2 show approximate value of quantity for estimation purpose.

(1) In case the machine has been stored for over 3 months without operation.

(2) In case the machine has been exposed to such abnormal heat as causes the temperature of the bearing to exceed 70℃.

(3) In case the machine has been stored for over one month at a place where the temperature is abnormally high with a high relative humidity.

During operation, attention must be paid not only to noises but also to vibration and temperature rise. Even if the noises are somewhat louder than usual, the machine may be kept in use if the vibration and temperature rise are normal.

The bearing temperature rises gradually with the lapse of time after commencement of operation and reaches a constant state after a certain period (which varies with machines but is usually approximately 2 hours). If there is abnormal temperature rise or if unusual noises or vibration occurs, it is necessary to stop the machine and investigate the cause

The following are items to be considered in locating the cause.

(1) Poor quality of grease
(2) Excessive filling of grease
(3) Insufficient filling of grease
(4) Dirt mixed in grease
(5) Deflection caused during mounting of bearing or assembly of machine
(6) Excessively small clearance
(7) Flaws on rollers, balls and races
(8) Retainer noise
(9) Exfoliation and biting
(10) Deformation of inner and outer races
(11) Improper coupling with driven machine
(12) Faulty balancing
(13) Elongation of shaft due to temperature
(14) Deterioration of grease
(15) Others

8. Washing

In case of washing bearings, put them into while kerosene heated to a temperature of 40～60℃ and clease them well and then give them a finishing bath give them a finishing bath in fresh white kerosene.

Even if the bearings will not turn, they must not be turned forcedly otherwise the rolling surface may possibly be scratched. It is, therefore, necessary to turn them slowly and gently while washing them.

Particular care should be taken in handling the bearings after washing them.

Do not touch the bearings with the bare hands, since this may occasionally result in rusting. Make it a rule to wear rubber gloves.

Compressed air must not be used to remove dirt and dust or to dry the bearings unless equipment that can thoroughly eliminate all moisture and dust contained in the air and the iron rust inside the pipe is provided.

9. Maintenance

If anything abnormal occurs during operation, it reveals itself as a remarkable temperature rise, abnormal noises or increased vibration. That the operator is familiar with the normal operating condition of the machine, in make to be capable of taking appropriate measures at an early stage, thereby preventing serious accidents. So long as the temperature, noise and vibration are not abnormal, all that need be done is to check the lubricant and to replenish or exchange the grease.

9.1 Frequency for replenishment of grease and quantity of grease to be fed

The actual frequency for replenishment of grease varies with the weight of the machine, the magnitude of vibration and environmental conditions (temperature, humidity, amount of dirt and dust, etc.) at the place where the machine is installed. Therefore, replenishing grease shall be made in accordance with the caution plate.

The interval is shown by a term which is considered while the machine is not running.

In case the caution plate is not attached, they should be refered to Fig. 8 for the standard replenishing interval of grease and Table 2 for the amount of grease.

Fig. 8(a) shows for the roller bearings and Fig. 8(b), for the ball bearings. The both are considered for the outdoor type machine. If the machine is mounted at indoor, the standard replenishing interval can extend to 120% of the value on Fig. 8. In case the both bearings, roller and ball are applied on a machine, the standard replenishing interval for roller bearing should be chosen.

Table 2(a), is applied for the grease-valve type construction and Table 2(b), for the semi-pack type construction.

In intermediate speed machine (1,800 rpm or less), the temperature does not vary even if a slightly excessive amount of grease is fed. However, in high speed machines (3,000～3,600 rpm) an excessive amount of grease occasionally causes an abnormal temperature rise and therefore the grease should be fed little by little. In case the bearing is filled up excessive amount of grease, it is necessary to open the outlet cover and remove the grease. Make it a rule to replenish grease while the machine is running.

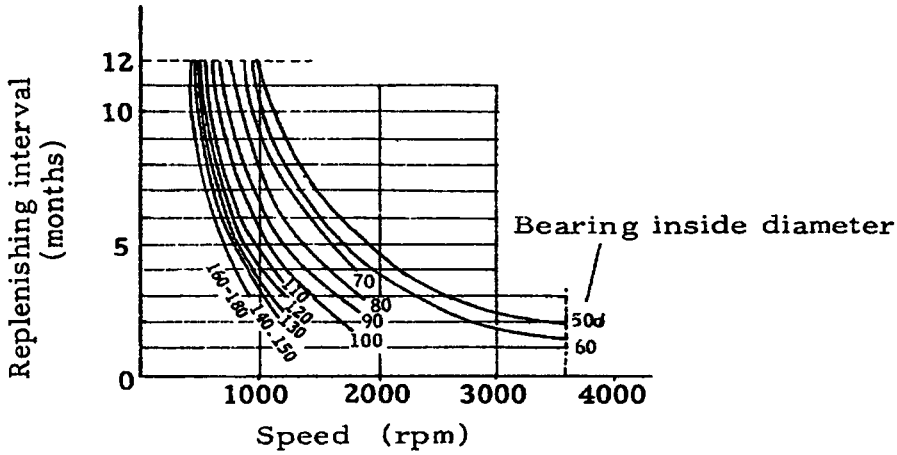

Fig. 8(a) Standard Replenishing Interval of Grease for Roller Bearing (Grease valve type)

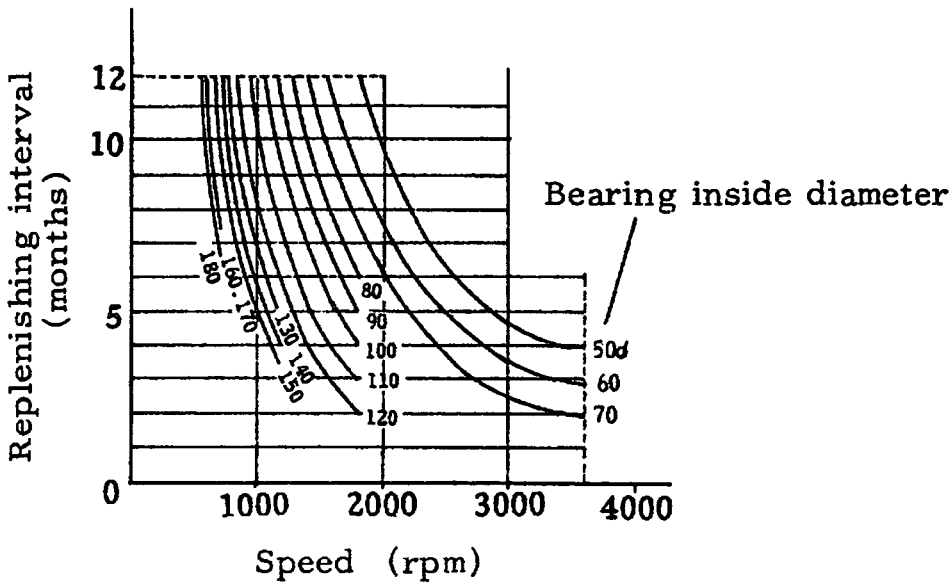

Fig. 8(b) Standard Replenishing Interval of Grease for Ball Bearing (Semi packed type)

Note 1) In case the machine is mounted at indoor and good environmental condition, the standard replenishing interval can extend to 120% of the value on above Fig. 8. But the max. Interval is 12 months.

2) The replenishing interval is shown by a term which is considered while the machine is not running.

Table 2(a) Approximate Amount of Grease to be Fed to Ball and Roller Bearings for Grease-valve Type Construction

Two lower figures of bearing number	Inside diameter of bearings (mm)	Approximate amount (g) of grease to be fed	
		Anti-load side	Load side
10	50	65	65
12	60	90	90
14	70	140	140
16	80	160	160
18	90	160	160
20	100	160	160
22	110	160	160
24	120	160	160
26	130	160	160
28	140	160	160
30	150	160	160

Note: The two lower figures of the bearing number denote the inside diameter of the bearing when multiplied by 5.
However, note that in special cases the figures and the inside diameter do not necessarily coincide.

Table 2(b) Approximate Amount of Grease to be fed to Ball and Roller Bearings for Semi-pack Type Construction

Two lower figures of bearing number	Inside diameter of bearings(mm)	Approximate amount (g) of grease to be fed	
		Anti-load side	Load side
10	50	10	14
12	60	15	20
14	70	20	30
16	80	30	45
18	90	40	60
20	100	55	70
22	110	70	90
24	120	90	100
26	130	140	160
28	140	160	160
30	150	160	160

9.2 Instruction for Replenishing Grease

(1) Replenish grease while the machine is running.

(2) In new machines, approximately one-half to two-thirds of the capacity inside the bearing cover is filled with grease.

(3) Specially, the amount of grease for the semi-pack type construction should be cared about specified amount on caution plate. Over charged grease will be caused by over heating of bearing.

(4) When replenishing grease for the sixth time, take off the bearing cover and remove all the old deteriorated grease from inside and fill approximately one-half to two-thirds of the capacity inside the outer bearing cover with new grease, and this filling should be regarded as the first time.

(5) Replace the grease regardless of the specified frequency whenever ingress of foreign matter, deformation emulsification, oil leakage, soiling, ingress of foreign matter, deformation due to wear, etc. are discovered.

(6) There are occasions when the noise of bearings in motors rest in more than 3 months is louder than usual and in these cases apply of a small amount of grease is commended.

9.3 Selection of grease

A suitable grease must be selected in accordance with the operating condition of bearings. Various types of grease which suit the actual service conditions of generators and motors are given in Table 3. The most recommendable one is shown on caution plate.

Avoid as far as possible mixing different types of grease. If ones of different bases are mixed together, an unexpected chemical reaction may occur, thereby impairing the lubricating performance of the grease. When putting a different kind of grease into use, therefore, be sure to remove the old grease completely.

Table 3 Grease to be used

Name of Grease	Dropping point ℃	Consistency 25℃	Remarks
Lithium grease Shell Alvania No. 2	〉180	265~295	Can be used for application.
Lithium grease Maruzen Oil Limzx No. 1 T	181	311	Can be used for all applications. Used for both high speed and low speed Hitachi motors and generators.
Lithium grease Kyodo grease Marutenpu P.S.No.2	〉170	265~295	

10. Storage

Ordinarily, bearings are coated with petrolatum of good quality as a rust preventive and wrapped in rust-preventing materials. However, these rust-preventing measures are not so perfect as to completely isolate the outside air. Particular care must be taken in storing the bearings.

(1) Avoid storage in damp places.

(2) Bearings packed in wooden boxes should be taken out on arrival and stored in a dry place at least one meter above the ground level.

(3) It is necessary to store bearings in places where it is as cold as possible.

11. Symbol to Denote Clearance in Bearing

To denote the magnitude of clearance in bearings, such symbols as "C3" and "C4" are in general use, and the use of a bearing with special clearance is sometimes required on a high-speed motor from the viewpoint of noise and vibration. Hyosung paid attention early to the clearance in bearings and had a manufacturer of bearings make one with special clearance do noted by a symbol "C" to use on motors. The merit of bearings with C' clearance has been widely recognized and such bearings have come into general use, the symbol being changed to "CM". Therefore, a bearing with C' has the same clearance as one with CM if they are of the same diameter. At present, CM is also used instead of C' by us as a symbol to denote the clearance.

Table 4 gives the relation among bearings with ordinary clearance, CM clearance and C3 clearance.

Table 4(a) Radial Clearance for Ball Bearing

Inside diameter range (mm)		Clearance (Unit : 0.001mm)					
		Ordinary		CM		C3	
Minimum	maximum	Min.	Max.	Min.	Max.	Min.	Max.
40	50	6	23	9	17	18	36
50	65	8	28	12	22	23	43
65	80	10	30	12	22	25	51
80	100	12	36	18	30	30	58
100	120	15	41	18	30	36	66
120	140	18	48	24	38	41	81
140	160	18	53	24	38	46	91
160	180	20	61			53	102
180	200	25	71			63	117

Table 4(b) Radial Clearance for Roller Bearing

Inside diameter range (mm)		Clearance(Unit : 0.001mm)					
		Ordinary		CM		C3	
Minimum	maximum	Min.	Max.	Min.	Max.	Min.	Max.
40	50	20	55	20	35	40	75
50	65	25	70	25	40	45	90
65	80	30	80	30	45	55	105
80	100	35	85	35	55	65	115
100	120	35	90	35	60	80	135
120	140	40	105	40	65	90	155
140	160	50	115	50	80	100	165
160	180	60	125	60	90	110	175
180	200	65	135	65	100	125	195

KAWASAKI

STARTER PANEL
OF

KAWASAKI SIDE THRUSTER
KT-157B3
FOR

4,150TEU Class Container Carrier

HYUNDAI HEAVY INDUSTRIES CO.,LTD.
S.No.H1630/1,1671/2,1699-1701,1733

DELIVERY	
YARD	10
KPME 工務	
KPME 工事	
工務	
組立	
検査	
控	1

ISSUE

ORDER NO.
31KB068 ,70,72,74,76,78,80,82

NOTES
For working Apr. 25, 2005

REVISION
R1: Revised for panel type from 3 to 1 panel, etc. Jan. 27, 2005 M.I.

DATE
November 24, 2004

KAWASAKI
HEAVY INDUSTRIES, LTD.

GAS TURBINE & MACHINERY COMPANY
MACHINERY DIVISION
MARINE MACHINERY DEP'T.
PROPULSION MACHINERY ENG'NG SECT.

APPROVED
for M. Ishihara

CHECKED

DRAWN
M. Ishihara

DRAWING NO.
G4-201-290 R1

(SHEETS COVER INC)

COMPLETION
DRAWING

MESSRS HYUNDAI HEAVY INDUSTRIES CO., LTD.
(KAWASAKI HEAVY INDUSTRIES, LTD.)

H1630/1631/1671/1672/1699/1700/1701/1733

STARTER FOR BOW THRUSTER

History of drawing
1: '04.11.29 : 2A : A.O
2: '05.4.6 : WORK : A.O
3: '05.10.25 : COMPLETION : A.O

TAIYO ELECTRIC CO.,LTD.

Approved	E.MATSUSHIMA	Reviewed	A.OKADA
Design	A.OKADA	Prepared	A.OKADA
Date	Apr. 21, 05		
No.	G15334 (1/2)		

CONTENTS (BOW THRUSTER)

DRAWING NAME		SHEET NO.
0-1 GENERAL SPECIFICATION	O/S **G15334**	01-1-01-2
0-2 NAME PLATE MODEL		02
0-3 CONTROL DEVICE NUMBER		03-05
0-4 CONN OF DEVICE		06-07
0-5 SHIPYARD SUPPLY LIST		SSL01

BOW THRUSTER

1-1 FLOW CHART		F00-F03
1-2 SETTING LIST		TMS01-TMS04
1-3 CAUTION NAMEPLATE		CNP1-CNP2
1-4 NAMEPLATE LIST		PA01
1-5 THE OPERATION MANUAL FOR THRUSTER CONTROL PANEL		PTM-1/7/8/9

STARTER PANEL for BOW THRUSTER

2-1 OUTLINE		ML01-ML02
2-2 PARTS ARRANGEMENT		PAG1-PAG2
2-3 TERMINAL ARRANGEMENT		MT01,CT01,HT01
2-4 WIRING DIAG.		W01-W04
2-5 CONNECTION DIAG.	(BOW THRUSTER)	M11-M17
2-6 EXPLANATION LIST	(CONTROL PANEL)	EXP01
2-7 CONNECTION DIAG.	(CONTROL PANEL)	C10-C27
2-8 CONNECTION DIAG.	(HYD OIL PUMP)	H11-H12
2-9 PARTS LIST	(BOW THRUSTER)	MP01-MP03
2-10 PARTS LIST	(CONTROL PANEL)	CP01-CP03
2-11 PARTS LIST	(HYD OIL PUMP)	HP01-HP02

Local Cont. Box for BOW THRUSTER

3-1 OUTLINE		L21
3-2 CONNECTION DIAG.		SL21
3-3 PARTS LIST		PL21

AMMETER for BOW THRUSTER

4-1 AMMETER with LAMP		A1-A2

PORTABLE EARTH SWITCH for BOW THRUSTER STARTER

5-1 LIST & OUTLINE		PES1-PES2

SPARE PARTS LIST

21 SPARE PARTS LIST		SP2-SP5

DATE:2005/04/21

GENERAL SPECIFICATION (1/2)

BOW THRUSTER STARTER

1. GENERAL

1-1	SHIPYARD	: HYUNDAI HEAVY INDUSTRIES CO., LTD.
1-2	SHIP NO.	: 1630 / 1631 / 1671 / 1672
		: 1699 / 1700 / 1701 / 1733
1-3	WORKING NO.	: 31KB068 / 31KB070 / 31KB072 / 31KB074
		: 31KB076 / 31KB078 / 31KB080 / 31KB082
1-4	ORDER NO.	: 04-5632-01 / 05-0216-01 / 05-0217-01 / 05-0218-01
		: 05-0219-01 / 05-0220-01 / 05-0221-01 / 05-0222-01
1-5	DELIVERY	: 2005-3-15 / 2005-5-24 / 2005-8-18 / 2005-11-8
		: 2006-1-30 / 2006-4-13 / 2006-7-7 / 2007-1-15
1-6	OWNER	: A. P. Moller
1-7	CLASSIFICATION	: LR
1-8	AMBIENT TEMP	: 45 ℃
1-9	POWER SOURCE	
	1) BOW ST	: AC3300V 3Φ 60Hz
	2) STERN ST	: AC440V 3Φ 60Hz
	3) HYD OIL PUMP ST	: AC440V 3Φ 60Hz
1-10	CONTROL SOURCE	: AC220V 1Φ 60Hz

---

2. PAINT COLOR (INNER : MAKER'S STANDARD)

2-1	THRUSTER STARTER (CONTROL PANEL) (HYD OIL PUMP STARTER)	: N-7.5	(GLOSSY)
2-4	LOCAL CONT. BOX	: N-7.5	(GLOSSY)

---

3. OVERLOAD PROTECTOR

THERMAL TYPE, TWO (2) ~~THREE(3)~~ PHASE WITH AMBIENT TEMPERATURE COMPENSATION (INTERNAL RESETTING SYSTEM)

---

4. NAME PLATE

4-1	MATERIAL	: METHACRYLATE	
4-2	LETTER (GENERAL)	: ENGLISH	: BLACK LETTER & WHITE GROUND
	LETTER (CAUTION)	: ENGLISH	: RED LETTER & WHITE GROUND

---

5. INTERNAL WIRING

5-1	MAIN CIRCUIT	: 0.6/1KV SCP, 6600V KIP
5-2	CONT CIRCUIT(0.75mm2,1.5mm2)	: 0.6/1KV SCP-1.5, SYP-0.75 (New JIS)
5-3	EARTH	: GREEN & YELLOW(ZEBRA)
5-4	COLOR OF BUS BAR (PARTIALLY)	: R.U.Y : RED S.V.Z : WHITE T.W.X : BLACK

---

6. CABLE LEAD-IN	: LOWER PORTION	: REFER TO DRAWING of OUTLINE
	: UPPER PORTION	: REFER TO DRAWING of OUTLINE
	: REAR SURFACE	: REFER TO DRAWING of OUTLINE

---

7. SIGNAL LAMP	: BA9S/13 6.3V 1W
8. FUSE	: CELLO LITE UC-1
9. EARTHING(Tr 2ND)	: WITHOUT
10. IP GRADE	: REFER TO DRAWING of OUTLINE

---

11. DRAWINGS FOR SUBMISSION

11-1 THE DRAWING FOR ARROVAL	: 3 COPIES + 1 REPRODUCIBLE SHEET
11-2 THE DRAWING FOR WORKING	: 12 COPIES
11-3 THE DRAWING FOR COMPLETION	: 9 COPIES

DATE:2005/10/04

GENERAL SPECIFICATION (2/2)

12. SCOPE OF SUPPLY

NO.	NAME	QT	RATING	POWER SOURCE	TYPE	MACH. NO.
1.	BOW THRUSTER STARTER	1	30min 1335Kw 284.1A	AC3.3KV / 60Hz	ZFF1-1	1630 :AE2859 1631 :AE3540 1671 :AE3542 1672 :AF65 1699 :AF67 1700 :AF69 1701 :AF71 1733 :AG5
	CONTROL PANEL FOR BOW THRUSTER			AC220V / 60Hz		
	HYD OIL PUMP STARTER FOR BOW THRUSTER		5.5kW / 9.8A	AC440V / 60Hz		
4.	LOCAL CONT. BOX FOR BOW THRUSTER	1			B02-1	1630 :AE5277 1631 :AE5279 1671 :AE8542 1672 :AE8555 1699 :AF2419 1700 :AF2421 1701 :AF2423 1733 :AF2425
5.	AMMETER with LAMP FOR BOW THRUSTER	1	IP40		AVF-11EZ	
6.	AMMETER with LAMP FOR BOW THRUSTER	2	IP56		SeVF-8L	
7.	PORTABLE EARTH SWITCH	1	AC7KV		MA122B-10	

(1) SIZE

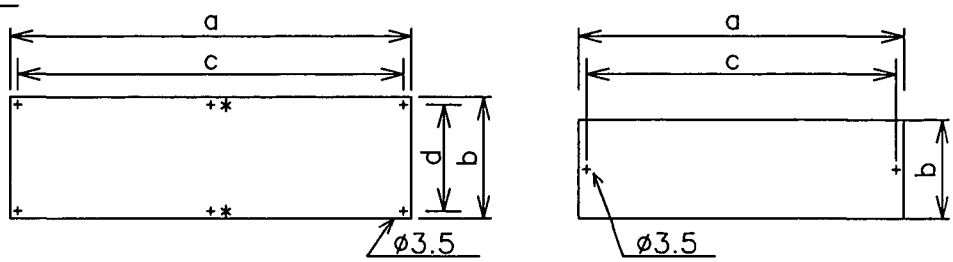

(2) MODEL

Type:A

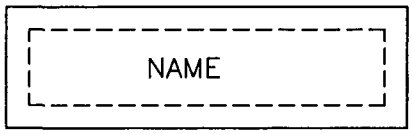

Type:B

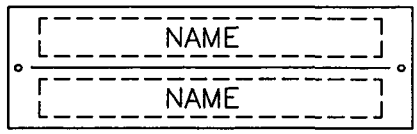

Type:C

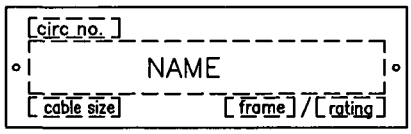

Type:D

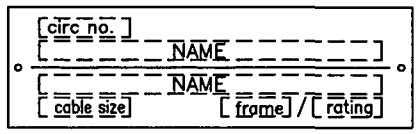

Type:L

Type:M

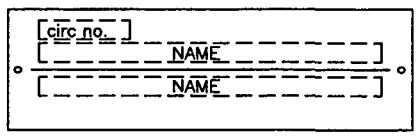

Type:GH

Type:FH

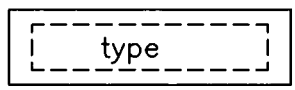

Type:N

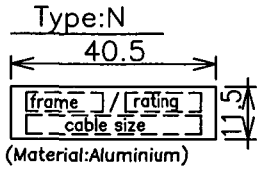

(Material:Aluminium)

(1) SIZE

Size	a	b	c	d	t
0	315	63	302	50	3
1	45	10	38	–	2
2	50	12.5	43	–	2
4	63	16	53	–	2
5	63	25	53	–	2
9	200	40	190	30	3
11	48	20	40	–	2
12	48	25	40	–	2
13	90	25	80	–	2
14	90	31.5	80	–	2
15	90	45	80	–	2
16	50	16	–	–	2
19	85	25	75	–	2

(3) ETC

MATERIAL : METHACRYLATE
GROUND : WHITE
LETTER : BLACK(rating RED)

LETTERS EXAMPLE

circ no. :	G1,M19A,GCP3
cable size :	H-TPYC-60
frame :	60,100,225,1600
rating :	15A,400A,INS700A

<< EXAMPLE >>

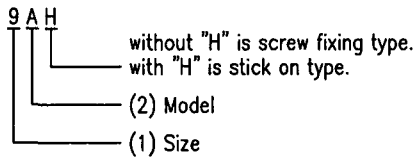

TYPE: 0A6

MATERIAL : ALUMINUM
LETTER : BLACK

FOR PUSH BUTTON SWITCH
& INDICATING LAMP

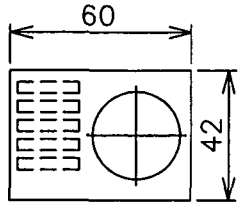

TAIYO ELECTRIC CO., LTD.	TITLE: NAME PLATE	DRAW.NO.: GB-00001	SHEET NO.: 02

AA02

NO.		DESCRIPTION
2		TIMER DELAY STARTING OR CLOSING RELAY
	2T	TIMING RELAY (GENERAL)
	2TX	CONTROL RELAY FOR TIMING RELAY
3		CONTROL SWITCH
	3C	START PUSH BUTTON
	3CL	DO. FOR LOW SPEED
	3CH	DO. FOR HIGH SPEED
	3CF	DO. FOR FORWARD
	3CR	DO. FOR REVERSE
	3-0	STOP PUSH BUTTON
	3CX	CONTROL RELAY FOR START
	3-0X	DO. FOR STOP
4		MAIN CONTROLCIRCUIT RELAY
	4X,4Y	CONTROL RELAY
	4HX,4LY	DO.
	4C	KEEP RELAY (CLOSE COIL)
	4T	DO. (TRIP COIL)
5		STOPPING SWITCH OR RELAY
	5E	EMERGENCY STOP SWITCH
6		STARTING CONTACTOR OR RELAY
		MAGNETIC CONTACTOR FOR STAR-DELTA START OR COMPEN START
8		CONTROL SOURCE SWITCH
10		SEQUENCE SWITCH
	10T	TIMING RELAY FOR SEQUETIAL START
11		TEST SWITCH OR RELAY
19	19T	STARTING TO RUNNING TRANSITION RELAY
		STARTING TO RUNNING TRANSITION TIMER
		FOR STAR-DELTA & COMPEN START
20		VALVE (ELECTROMAGNETIC VALVE
23		THERMOSTAT
	23Q	THERMOSTAT FOR OIL
	23W	
	23X	CONTROL RELAY FOR THERMOSTAT
27		UNDER VOLTAGE RELAY
	27X	VOLTAGE RELAY
28		ALARM DEVICE
	28B	CONTROL RELAY FOR BELL
	28S	DO. FOR LOW SPEED
	28X	DO. FOR HIGH SPEED
	28Z	DO. FOR FORWARD

NO.		DESCRIPTION
30		CONDITION OR FAULT INDICATOR
	30X,30Y 30Z	CONTROL RELAY FOR TROUBLE INDICATOR
33		POSITION SWITCH OR DETECTOR
	30Q	FLOAT SWITCH FOR OIL
	33W	DO. FOR WATER
	33X,33Y	AUX. RELAY FOR FLOAT SWITCH
	33T	TIMING RELAY FOR DO.
	33IL	DOOR INTERLOCK SWITCH FOR DRAW OUT STARTER UNIT
43		CHANGE OVER SWITCH CONTACTOR OR RELAY FOR CONTROL CIRCUIT
	43	CHANGE OVER SWITCH (GENERAL)
	43A	MANUAL-AUTO CHANGE OVER SWITCH
	43R	LOCAL-REMOTE CHANGE OVER SWITCH
	43RX	CONTROL RELAY FOR REMOTE SIDE OPERATION
48		OVERDUE DETECT RELAY
	48T	OVERDUE DETECT (COMPEN START FAIL) TIMER
49		TEMPERATURE RELAY FOR ROTARY MACHINE
51		OVER CURRENT RELAY
	51X	AUX. RELAY
52		CIRCUIT BREAKER
63		PRESSURE SWITCH
	63A	PRESSURE SWITCH FOR AIR
	63Q	DO. FOR OIL
	63W	DO. FOR WATER
	63X	AUX. RELAY FOR PRESSURE SWITCH
	63C	KEEP RELAY FOR PRESSURE SWITCH (CLOSE COIL)
	63T	DO. (TRIP COIL)
66		FLASHER RELAY
	66F	FLICKER RELAY
72		DC. CIRCUIT BREAKER OR MAGNETIC CONTACTOR
83		AUTOMATIC SELECTIVE CONTROL OR TRANSFER RELAY
	83X,83Y	AUX. RELAY
88		MAGNETIC CONTACTOR OR SWITCH FOR GENERAL MACHINE
	88	MAIN CONTACTOR
	88-1	MAIN CONTACTOR FOR COMPEN START OR STAR-DELTA
	88-2	DO.
89		DISCONNECTING SWITCH

AA03

TAIYO ELECTRIC CO., LTD.

TITLE: CONTROL DEVICE NUMBERS AND SUFFIS LETTERS (FOR CONTROL DIAGRAMS)

DRAW.NO. GB-00001

SHEET NO. 03

SYMBOL	DESCRIPTION
	ONE CONDUCTOR OR A GROUP OF SEVERAL CONDUCTORS
	TWO CONDUCTORS (MULTILINE REPRESENTATION)
n	n CONDUCTORS (SINGLE-LINE REPRESENTATION)
	CROSSING WITHOUT ELECTRICAL CONNECTION
	JUNCTION OF CONDUCTORS
	TERMINAL. CONNECTION OF CONDUCTORS
	JOINT TERMINALS
R	RESISTANCE OR RESISTOR
	INDUCTANCE OR INDUCTOR
	COIL
	CAPACITANCE. CAPACITOR
	RELAY COIL. GENERAL SYMBOL
	HULL CONNECTION (EARTH)
	MECHANICAL COUPLING GENERAL SYMBOL
	SWITCH. GENERAL SYMBOL
	THREE-POLE SWITCH, SINGLE REPRESENTATION
52	CIRCUIT-BREAKER
	CHANGE-OVER CONTACT BREAK BEFORE MAKE
	MAKE BEFORE BREAK CONTACT (OVER LAP CONTACT)
	CONTACTOR NORMALLY OPEN (MAIN)
	CONTACTOR NORMALLY CLOSE (MAIN)
	MAKE CONTACT. (a CONTACT) GENERAL SYMBOL
	BREAK CONTACT. (b CONTACT) GENERAL SYMBOL
	PLUG AND SOCKET (MALE AND FEMALE)
R	RESISTOR WITH MOVING CONTACT. GENERAL SYMBOL
	FUSE
G	GENERATOR
M	MOTOR
	SINGLE-PHASE TRANSFORMER WITH TWO SEPARATOR WINDINGS
	AUTO-TRANSFORMER THREE-PHASE
	SEMICONDUCTOR DIODE OR RECTIFIER, GENERAL SYMBOL
V	VOLTMETER
A	AMMETER
	CURRENT TRANSFORMER
WL	PILOT LAMP (FOR ELECTRIC SOURCE ON.)

SYMBOL	DESCRIPTION
GL	INDICATING LAMP (FOR MOTOR RUNNING)
RL	ABNORMAL INDICATING LAMP
89 52	DISCONNECTING SWITCH OR MOLDED CASE CIRCUIT BREAKER
SHC 52	MOLDED CASE CIRCUIT BREAKER (WITH SHUNT TRIP COIL)
UVT	UNDER VOLTAGE TRIPPING COIL OF CIRCUIT BREAKER
TERMINALS	
C1 C2 C3 / P-2B-01 / L-TPYC-1.25	TERMINAL MARK / CABLE NO / CABLE SIZE
	JOINT TERMINALS
	EQUIPMENT OF OUTSIDE
	EQUIPMENT OF OTHER UNIT
POWER & RELAY CONTACT	
a / b	CONTACT (GENERAL) OF MANUAL CONTACT
	MANUALLY OPERATED AUTO. RESET CONTACT
	MANUALLY OPERATED AUTO. RESET CONTACT (WITH LOCKING DEVICE)
	MACHANICAL CONTACT
	HAND-RESET CONTACT
	RELAY CONTACTOR OR AUX. SWITCH CONTACT
	CONTACT WITH TIME LIMIT OPERATION (ON DELAY TYPE)
	CONTACT WITH TIME LIMIT OPERATION (OFF DELAY TYPE)
	RUCHING RELAY CONTACT
	GANG SWITCH MANUAL OPERATED RESIDUAL CONTACT
	C CONTACT
	CONTROL SWITCH OF CONTROLLER CONTACT
HRM	RUNNING HOUR METER

TAIYO ELECTRIC CO., LTD.	TITLE: GRAPHICAL SYMBOLS AND ELECTRICAL APPARATUS BASIC SYMBOLS	DRAW.NO. GB-00001	SHEET NO. 04

AA04

SYMBOL	DESCRIPTION
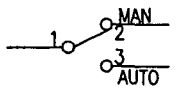	CHANGEOVER SWITCH MAN:(1−2)ON,(1−3)OFF AUTO:(1−2)OFF,(1−3)ON
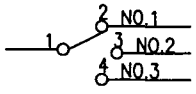	CHANGEOVER SWITCH NO.1:(1−2)ON,(1−3)(1−4)OFF NO.2:(1−3)ON,(1−2)(1−4)OFF NO.3:(1−4)ON,(1−2)(1−3)OFF
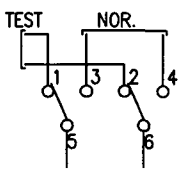	TEST SWITCH FOR SEQUENCE TEST−NORMAL NORMAL:(3−5)(4−6)ON (1−5)(2−6)OFF TEST : (1−5)(2−6) (3−5)(4−6)OFF
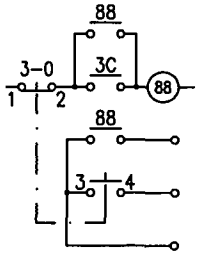	STOP ALARM SIGNAL WHEN MANUAL STOP (1−2) SLOW ACTION (3−4) QUICK ACTION 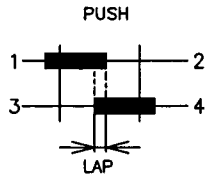
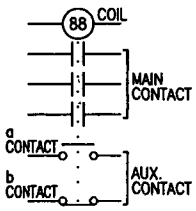	MAIN MAGNETIC CONTACTOR
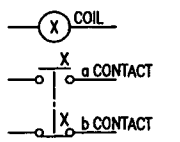	AUXILIARY RELAY
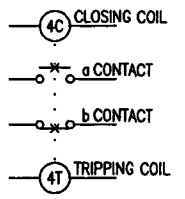	KEEP(RATCHING)RELAY WHEN 4C IS ENERGIZED "a" CONTACT IS KEPT ON "b" CONTACT IS KEPT OFF WHEN 4T IS ENERGIZED "a" CONTACT IS KEPT OFF "b" CONTACT IS KEPT ON
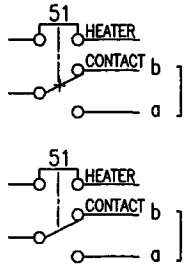	OVERCURRENT RELAY MANUAL RESET TYPE AUTO RESERT TYPE

SYMBOL	DESCRIPTION
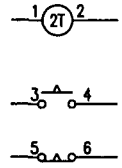	TIME RELAY (ON DELAY TYPE) 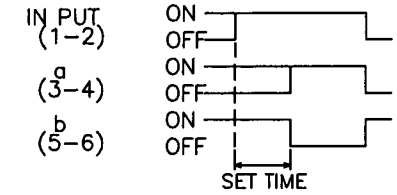
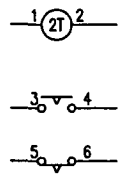	TIME RELAY (OFF DELAY TYPE) 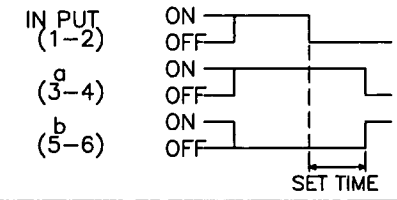
	CONTROL SWITCH (CAM SWITCH) 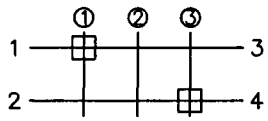 ① NOTCH (1−3) ON, (2−4) OFF ② NOTCH (1−3)(2−4) OFF ③ NOTCH (1−3) OFF, (2−4) ON

TAIYO ELECTRIC CO., LTD.	TITLE GRAPHICAL SYMBOLS AND ELECTRICAL APPARATUS	DRAW.NO. GB−00001		SHEET NO. 05

AA05

TYPE	CONNECT	CONTACT
SC-05 SC-5-1	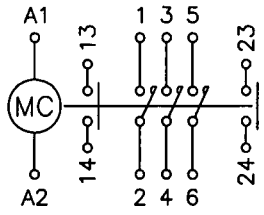	AUX 2a MAIN 3a
SC-N1 SC-N2 SC-N2S SC-N3 SC-N4 SC-N5 SC-N6 SC-N7 SC-N8 SC-N10 SC-N11 SC-N12 SC-N14 SC-N16	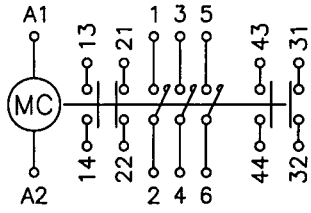	AUX 2a2b MAIN 3a
TR-0N(L) TR-5-1(L) TR-N1(L) TR-N2(L) TR-N3(L) TR-N4(L) TR-N6(L) TR-N8(L) TR-N10(L) TR-N11(L) TR-N12(L) TR-N14(L)	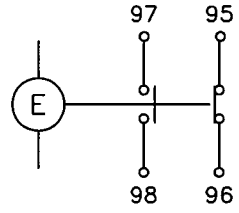	1a1b
MY4Z-D MY4Z-CR (PYF-14A)	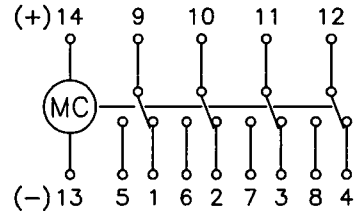	4c
612F-3BS 620F-3BS	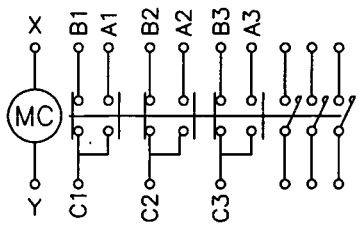	AUX 3c MAIN 3a

TYPE	CONNECT	CONTACT
SH-4	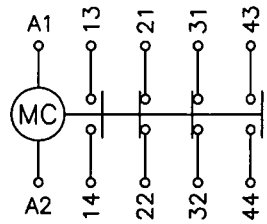	2a2b
SH-4	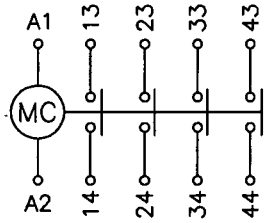	4a
SZ-A22	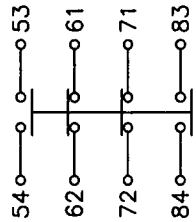	2a2b
SZ-A40	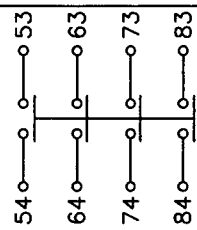	4a
SZ-A31	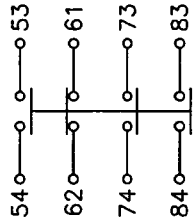	3a1b
SRC50 -2F/X	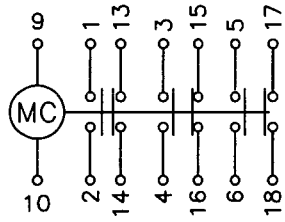	3a3b
SRC50 -2U/X	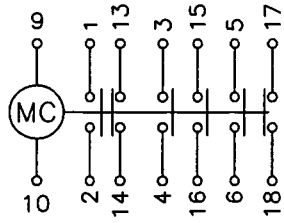	4a2b

TAIYO ELECTRIC CO., LTD.	TITLE CONN OF DEVICE	DRAW.NO. GB-00002		SHEET NO. 06

AA06-1

TYPE	CONNECT	CONTACT	TYPE	CONNECT	CONTACT
H3CR-A8 (P2CF-08)	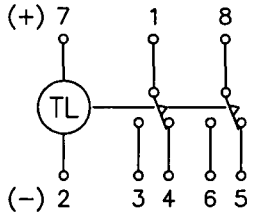	2c			
H3CR-G8L (P2CF-08)	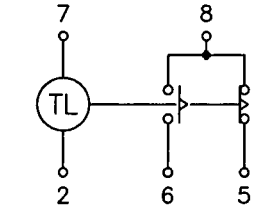	1c			
H3CR-H8L (P2CF-08)	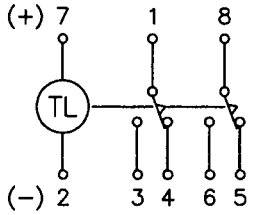	2c			
SRS-F	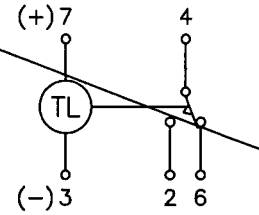	1c			
SH-4/V	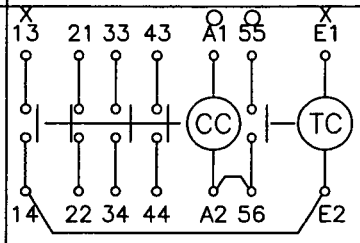	2a1b			
SH-4/V	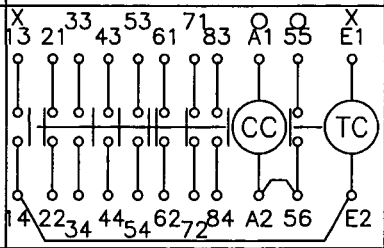	4a3b			

	TITLE	DRAW.NO.		SHEET NO.
TAIYO ELECTRIC CO., LTD.	CONN OF DEVICE	GB-00002		07

AA07

SHIPYARD SUPPLY LIST / 造船所支給品リスト

DATE:2005/4/5

[PLACE OF DELIVERY]
TAIYO ELECTRIC CO.,LTD. GUNMA CONTROL FACTORY
726 YATTAJIMA-MACHI, ISESAKI-CITY, GUNMMA, 372-0827
TEL:0270-32-1234 FAX:0270-31-2789

[支給品送り先]
宛先:大洋電機(株) 群馬事業所 制御機器工場 資材部
住所:〒372-0827 群馬県伊勢崎市八斗島726
TEL:0270-32-1234 FAX:0270-31-2789

PLEASE SPECIFIED FOLLOWING ITEMS ON YOUR SUPPLY LIST
1. NAME OF SHIPYARD
2. HULL NUMBER
3. TAIYO'S ARRANGE NUMBERS

支給品には下記項目を明記下さるようお願い致します
1. 造船所名
2. 船番
3. 弊社整理番号

DATE OF DELIVERY / 御支給希望日:

NO. 番号	PARTS NAME 支給品名称	QT 数量	TYPE / DWG 型番 / 図番	MAKER メーカー	ARRANGE NO. 整理番号
1.	<BOW> THERMISTOR RELAY (49HH)	1	ACT1C-1L	FUJI ELECTRIC	
2.	<BOW> THERMISTOR RELAY (49X)	1	ACT1C-1L	FUJI ELECTRIC	
3.	<BOW> THERMISTOR RELAY (49STH)	1	3RN10 00-1AM00	SIEMENS	
4.	<BOW> THERMISTOR RELAY (49STX)	1	3RN10 00-1AM00	SIEMENS	
~~5.~~	~~<STERN> THERMISTOR RELAY (49HH)~~	~~1~~	~~ACT1C-1L~~	~~FUJI ELECTRIC~~	
~~6.~~	~~<STERN> THERMISTOR RELAY (49X)~~	~~1~~	~~ACT1C-1L~~	~~FUJI ELECTRIC~~	

ORDER : 04-5632-01		O/S : G15334	
MESSRS : KAWASAKI / HYUNDAI HEAVY INDUSTORIES.		H1630/31/71/72/99/1700/01/33	PANEL : BOW/STERN
TAIYO ELECTRIC CO.,LTD.	TITLE SHIPYARD SUPPLY LIST	DRAW. NO. G4-15334-SSL1	SHEET NO. SSL01

SYMBOL シンボル	NAME 名称	SYMBOL シンボル	NAME 名称	SYMBOL シンボル	NAME 名称	SYMBOL シンボル	NAME 名称
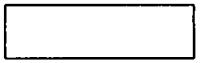	PROCESS 処理		AND 論理積				
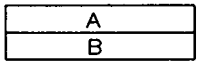	A: CAUSE B: CONTENTS OF CAUSE A: 原因 B: 内容		OR 論理和				
	FLOW LINE 流れ線		CONNECTOR 結合子				
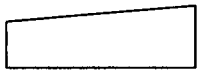	MANUAL INPUT 手操作入力		INDICATION ON 表示　点灯				
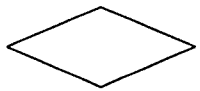	DECISION 判断		INDICATION OFF 表示　消灯				
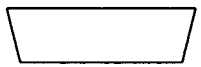	MANUAL OPERATION 手作業		ALARM 警報				
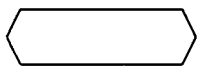	PREPARATION 準備	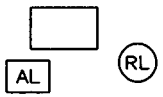	OUTSIDE OF panel				
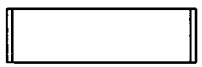	PREDEFINED PROCESS 定義済み処理						
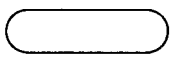	TERMINATOR 端子						

CUST. HHI 1630~	IP		kW	F00	TAIYO ELECTRIC CO., LTD.	TITLE	DRAW.NO.	SHEET NO.
COLOR	MASS	FLOW CHART SYMBOL				FLOW CHART	G3-15334-F00	F00

GB-00008-F00 A 01_F00

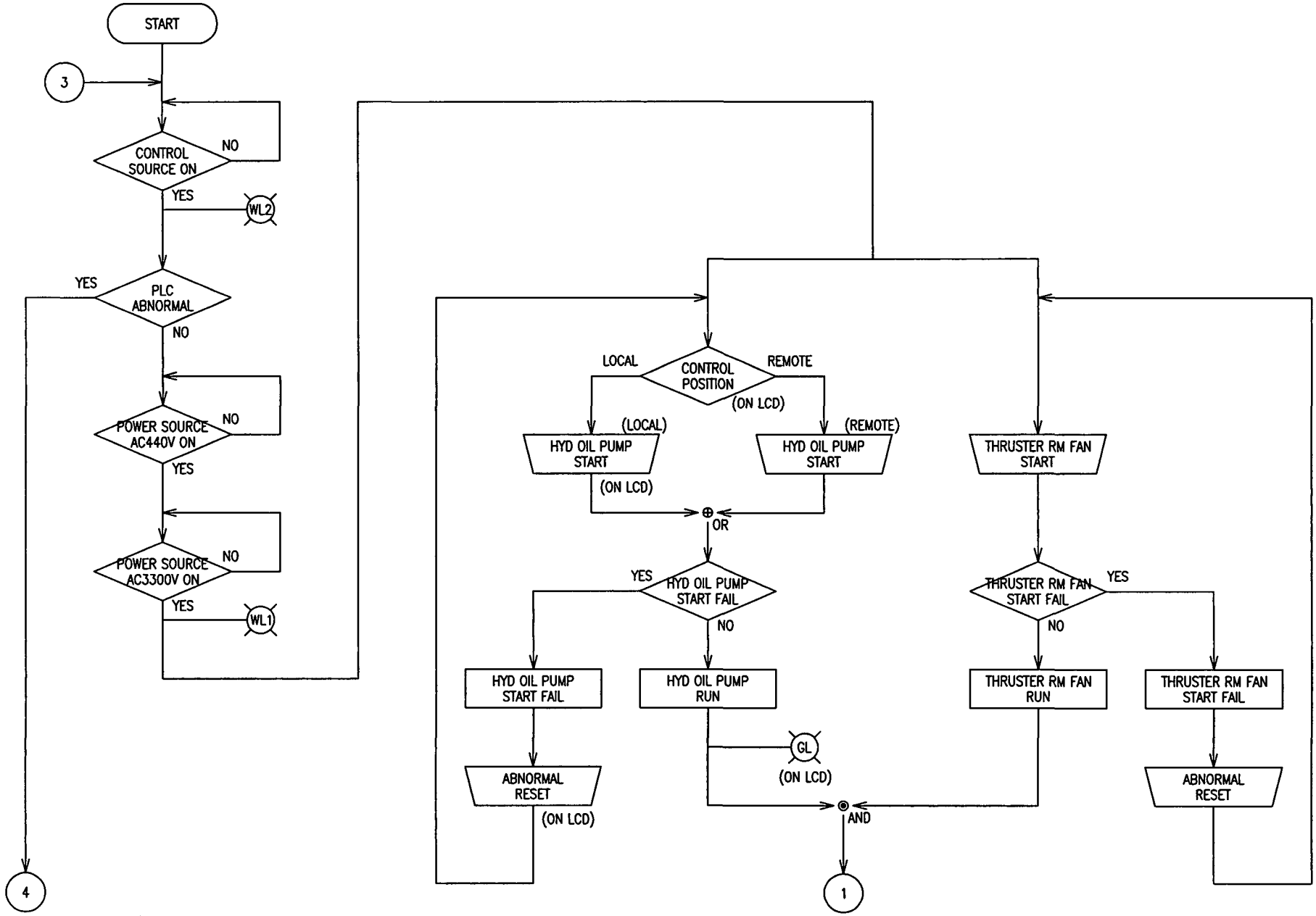

*) LCD : Liquid Crystal Display with Touch Screen.

CUST. : HHI 1630~	IP :		kW	F01	TAIYO ELECTRIC CO., LTD.	TITLE	DRAW.NO.	SHEET NO.
COLOR:	MASS :	BOW THRUSTER CONTROL				FLOW CHART	G3-15334-F01	F01

A 01_F01 F01

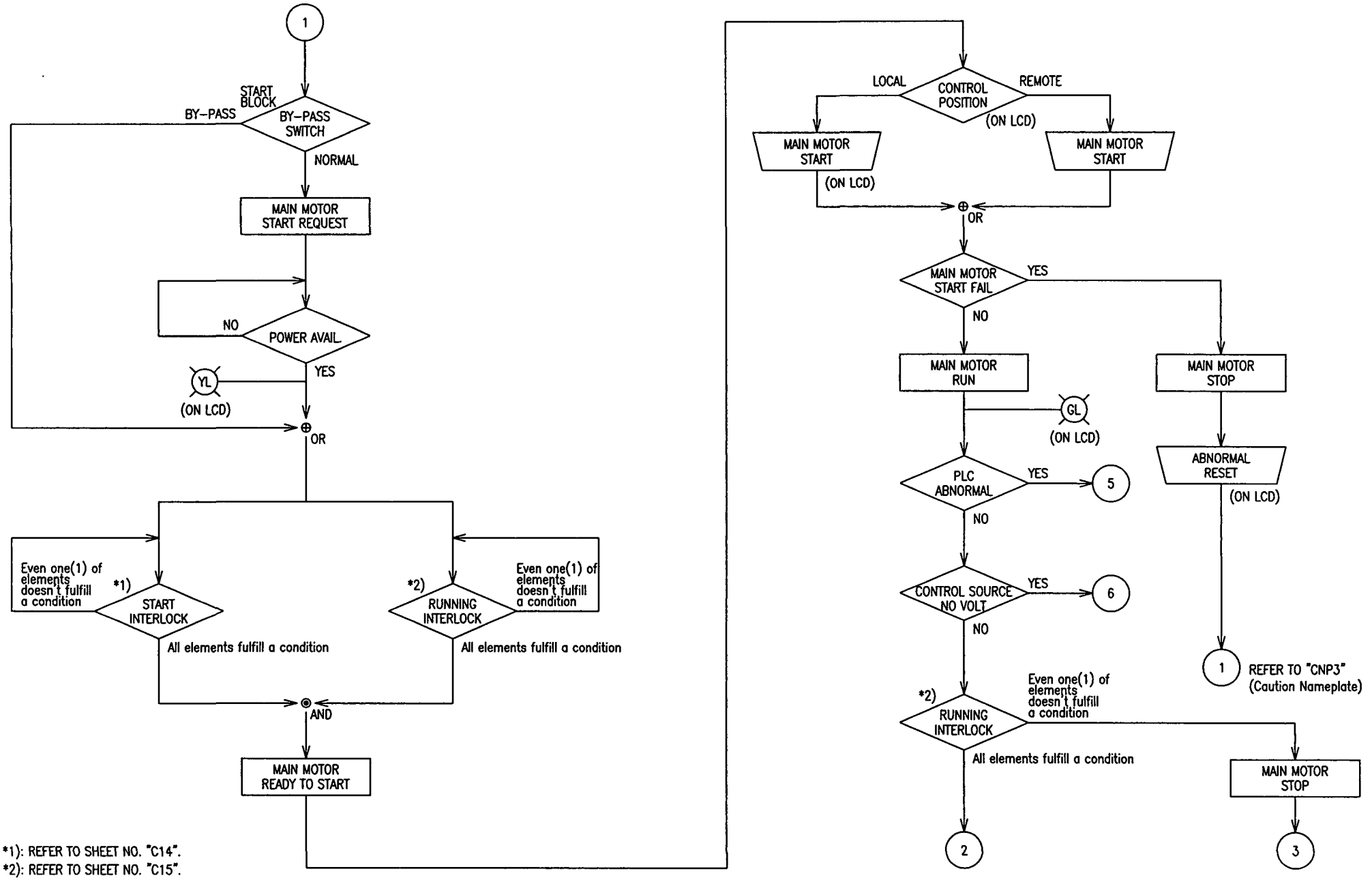

*1): REFER TO SHEET NO. "C14".
*2): REFER TO SHEET NO. "C15".

CUST. : HHI 1630~	IP :		kW	F02	TAIYO ELECTRIC CO., LTD.	TITLE	DRAW.NO.	SHEET NO.
COLOR:	MASS :	BOW THRUSTER CONTROL				FLOW CHART	G3-15334-F02	F02

01_F02

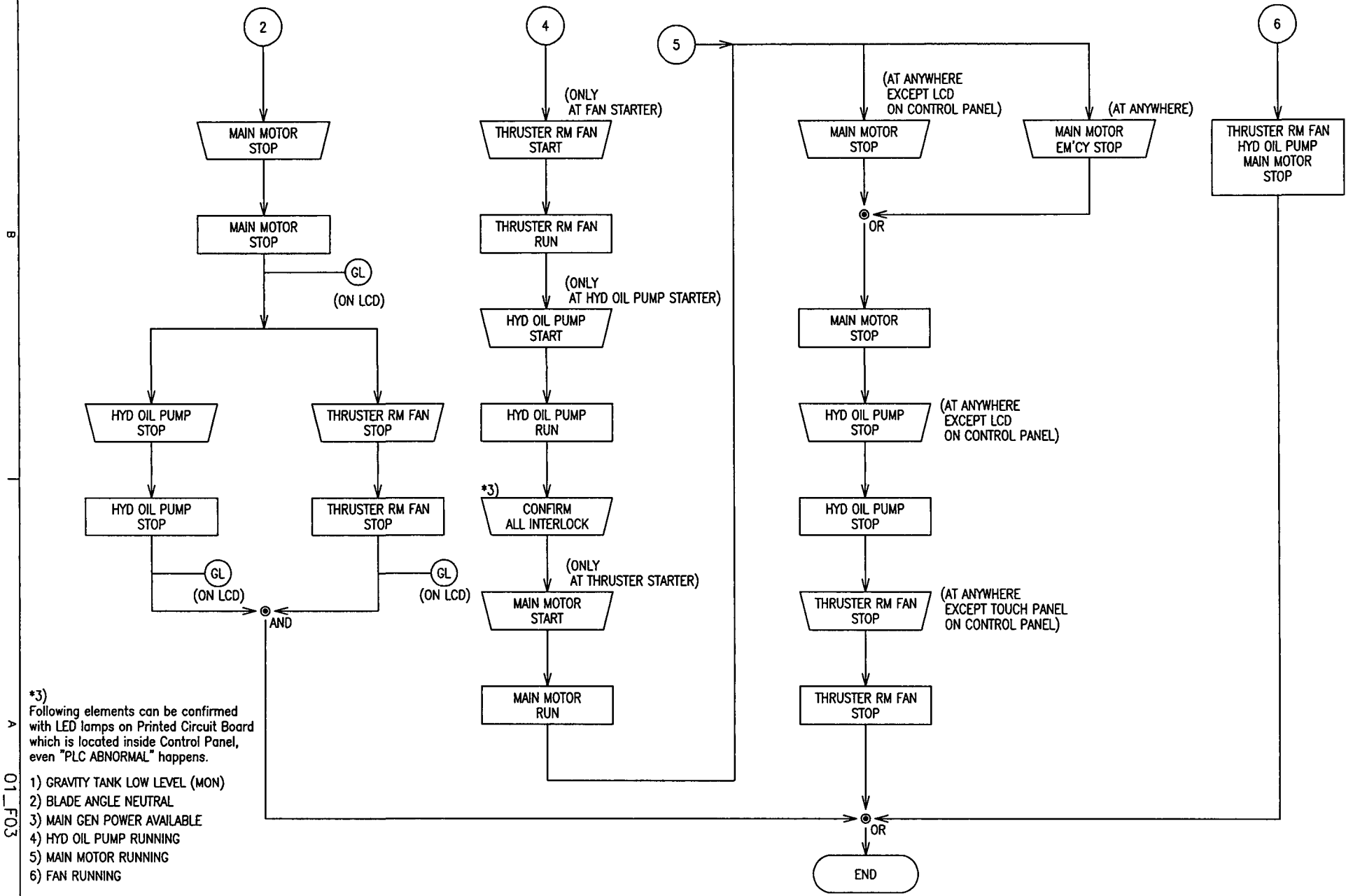

*3)
Following elements can be confirmed with LED lamps on Printed Circuit Board which is located inside Control Panel, even "PLC ABNORMAL" happens.

1) GRAVITY TANK LOW LEVEL (MON)
2) BLADE ANGLE NEUTRAL
3) MAIN GEN POWER AVAILABLE
4) HYD OIL PUMP RUNNING
5) MAIN MOTOR RUNNING
6) FAN RUNNING

CUST. HHI 1630~	IP		kW	F03	TAIYO ELECTRIC CO., LTD.	TITLE	DRAW.NO.	SHEET NO.
COLOR	MASS	BOW THRUSTER CONTROL				FLOW CHART	G3-15334-F03	F03

01_F03

TIMER SETTING LIST

DM NO	NAME	KIND OF TIMER	DELAY TIME	AVAILABLE TIME	REMARK
D200	FAN STOP ORDER SENDING	TIMER OF SENDING THE ORDER	2 sec	1~99 sec	
D201	FAN START ORDER SENDING	Ditto	2 sec	1~99 sec	
D202	HYD PP STOP ORDER SENDING	Ditto	2 sec	1~99 sec	
D203	HYD PP START ORDER SENDING	Ditto	2 sec	1~99 sec	
D204	M/M STOP ORDER SENDING	Ditto	2 sec	1~99 sec	
D205	M/M START ORDER SENDING	Ditto	2 sec	1~99 sec	
D210	FAN START FAIL	TIMER OF WAITING FOR RUNNING FEEDBACK AFTER SENDING START ORDER	10 sec	1~30 sec	
D211	HYD PP START FAIL	Ditto	10 sec	1~30 sec	
D212	M/M START FAIL	Ditto	25 sec	1~30 sec	
D350	For HYD PP LOW PRESS (0001/0201) by HYD PP RUN (0008)	BIULD UP TIMER FOR "HYD PP LOW PRESS" AFTER HYD PP RUN	5 sec	0~30 sec	

02_TMS01

TMS01

CUST. : HHI 1630~	IP :		kW TMS1	TAIYO ELECTRIC CO., LTD.	TITLE	DRAW.NO.	SHEET NO.
COLOR:	MASS :	BOW THRUSTER CONTROL PANEL			SETTING LIST	G3-15334-TMS1	TMS01

START REQUEST METHOD SETTING

<< EXPLANATION >>

There are two(2) type of method for START REQUEST. And it is able to be selected on LCD touch panel which type is applied.
The detail for each type of method as follows.
Each START REQUEST button is available when control position is selected at own position.
In case "REMOTE" control position is selected, START REQUEST signal is sent to PMS during START REQUEST signal comes from W/H side.
Control panel is just passing through the START REQUEST signal to PMS from W/H even once getting START REQUEST signal into PLC.

SELECTED METHOD	DETAIL OF EACH METHOD
○	TYPE 1 (Start Request Method) <<< STANDARD >>> Once sending request signal to PMS(Power Management System) by pressing START REQUEST button on LCD touch panel or other place except W/H, it is possible to reset by pressing START REQUEST RESET button on LCD touch panel before getting POWER AVAIL or MAIN MOTOR RUN signal. In case after getting one of POWER AVAIL or MAIN MOTOR RUN signal, it is not possible to reset by pressing START REQUEST RESET button on LCD touch panel. It'll be reset automatically when Main Motor stops. (During START REQUEST signal is been senting to PMS, START REQUEST indicator is lit on LCD touch panel.)
	TYPE 2 (Start Request Method) Once sending request signal to PMS(Power Management System) by pressing START REQUEST button on LCD touch panel or other place except W/H, it is possible to reset by pressing START REQUEST RESET button on LCD touch panel before getting POWER AVAIL signal. And it'll be reset automatically, when POWER AVAIL signal comes. It is not possible to send request signal, during POWER AVAIL or MAIN MOTOR RUN. (During START REQUEST signal is been senting to PMS, START REQUEST indicator is lit on LCD touch panel.)

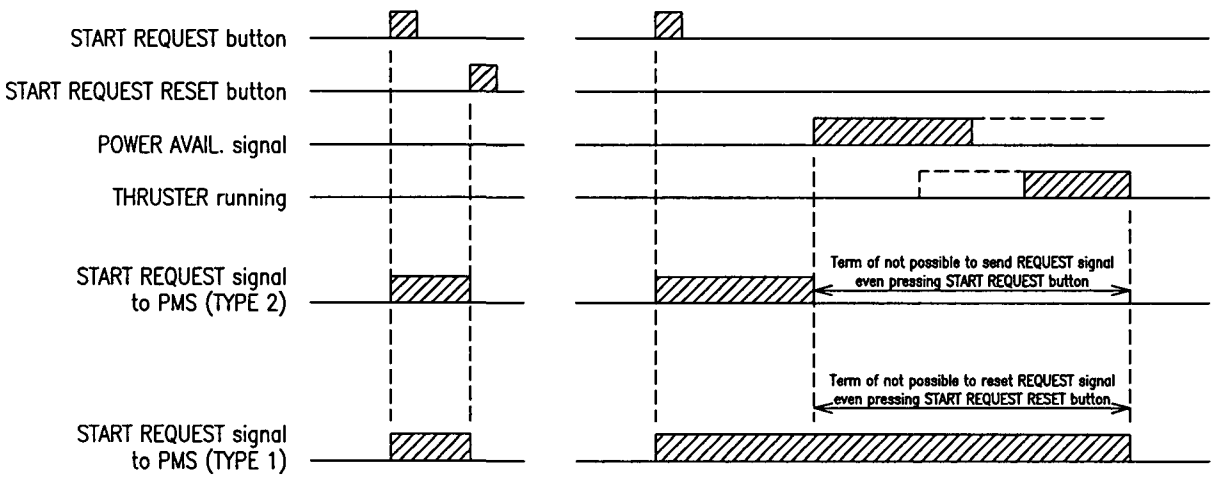

CUST. : HHI 1630~	IP :		kW TMS2	TAIYO ELECTRIC CO., LTD.	TITLE	DRAW.NO.	SHEET NO.
COLOR:	MASS :	BOW THRUSTER CONTROL PANEL			SETTING LIST	G3-15334-TMS2	TMS02

02_TMS02
TMS02

TOO MANY START BLOCK SETTING

<< EXPLANATION >>

This function is for protection of auto transformer against burn out due to main motor starting many times.
And this function is able to be selected "ENABLE" or "DISABLE", also each setting value can be set on LCD touch panel.
This function is watching how many times main motor was started every preset period (D601).
And if starting time reaches limited max. starting time (D610), TOO MANY START ALARM happens when main motor stops, and main motor can't start for peset period (D602). It can start after passing peset period (D602).

○	ENABLE	TOO MANY START BLOCK FUNCTION
	DISABLE	

DM NO	NAME	SETING	AVAILABLE SETTING	REMARK
D601	PERIOD FOR MONITORING HOW MANY TIMES MAIN MOTOR STARTING	3600 sec	60~3600 sec	
D602	PERIOD FOR RESTART OF MAIN MOTOR, AFTER PICKING UP "TOO MANY START ALARM"	1800 sec	60~3600 sec	
D610	LIMITED MAX. STARTING TIME OF MAIN MOTOR	4	1~5	

FAN START / STOP PB SETTING

<< EXPLANATION >>

This function is for selecting whether start button with running lamp & stop button for thruster room fan are used or not at "MOTOR CONTROL" picture on LCD touch panel.
"ENABLE" is selected, above START/STOP button & RUNNING lamp apear on "MOTOR CONTROL" picture.
"DISABLE" is selected, above START/STOP button & RUNNING lamp disapear on "MOTOR CONTROL" picture.

○	ENABLE	FAN START / STOP PB FUNCTION ON MOTOR CONTROL PICTURE
	DISABLE	

LCB POSITION SELECT PB SETTING

<< EXPLANATION >>

This function is for selecting whether 3rd control position (LCB:Local Control Box) is used or not at "MOTOR CONTROL" picture on LCD touch panel.
"ENABLE" is selected, "LCB" control position select button apear on "MOTOR CONTROL" picture.
Then totally 3 control positions (LCB – LOCAL – REMOTE) are available.
"DISABLE" is selected, "LCB" control position select button disapear on "MOTOR CONTROL" picture.
Then totally 2 control positions (LOCAL – REMOTE) are available.

○	ENABLE	LCB CONTROL POSITION SELECT FUNCTION
	DISABLE	

CNP1 (CAUTION NAMEPLATE FOR HIGH VOLTAGE)

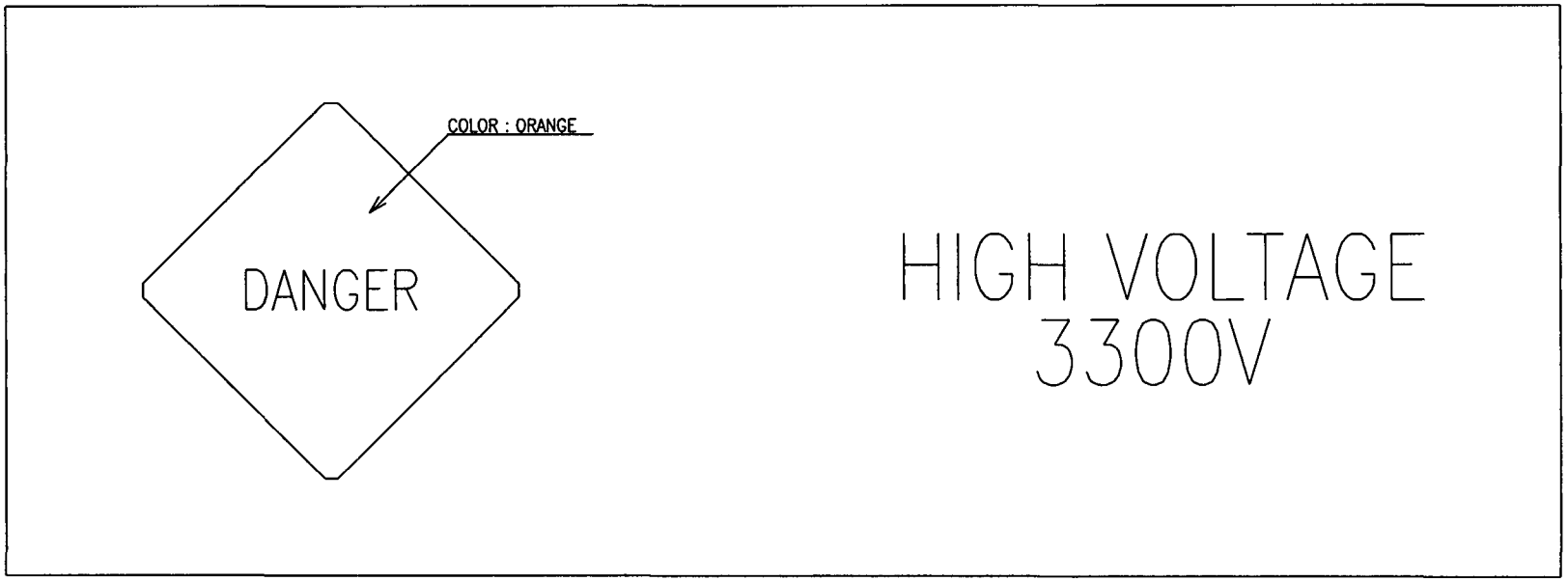

SIZE :300 x 100
1. QT : 1
2. RED LETTER ON WHITE GROUND.

CUST. : HHI 1630~	IP :		kW	CNP1	TAIYO ELECTRIC CO., LTD.	TITLE CAUTION NAMEPLATE BOW THRUSTER	DRAW.NO. G3-15334-CNP1	SHEET NO. CNP1
COLOR :	MASS :	CAUTION NAMEPLATE						

03_CNP1

CNP2 (CAUTION NAMEPLATE FOR SEQUENCE TEST)

CAUTION

PROCEDURE OF DOING SEQUENCE TEST
1) IN THE FIRST, SWITCH OFF DISCONNECT SWITCH OR MCCB.
2) NEXT, SET THE EM'CY OPERATION SWITCH TO "BY PASS"
3) AFTER FINISHING SEQUENCE TEST, ALWAYS TURN TO "NORMAL"

SIZE :100 x 40
1. QT : 1
2. RED LETTER ON WHITE GROUND.

CNP4 (CAUTION NAMEPLATE FOR JUMPER LINE FOR OLP)

CAUTION

JUMPER LINE FOR PROTECTION OF CT FOR OLP SIGNAL OUTPUT
IS TO BE REMOVED,
WHEN CONNECTING WIRES FOR OLP SIGNAL
BETWEEN THRUSTER'S REMOTE CONTROLLER AND STARTER.

SIZE :100 x 40
1. QT : 1
2. RED LETTER ON WHITE GROUND.
3. THIS NAMEPLATE LOCATED
NEAR THE CT (CT4) FOR OLP.
(本銘板は盤内のOLP電流出力用CT (CT4)
のそばに装備されています。)

CNP3 (CAUTION NAMEPLATE FOR STARTING TIMES)

CAUTION

1) DO NOT TAKE THREE TIMES OR MORE STARTING PER MINUTE.
2) IN CASE OF RESTART, NEED 25 MINUTES
OR MORE PAUSE TO GIVE COOLING TIME.

SIZE :100 x 40
1. QT : 1
2. RED LETTER ON WHITE GROUND.

CNP5 (CAUTION NAMEPLATE FOR EM'CY OPERATION)

CAUTION

IN CASE OF "PLC ABNORMAL" HAPPENS OR CONTROL PANEL
DOESN'T WORK, PLEASE OPERATE MAIN MOTOR &
HYD OIL PUMP WITH SETTING THE EM'CY OPERATION SWITCH
TO "BY PASS" AT EACH STARTER SIDE,
AFTER CONFIRMATION OF ALL INTERLOCK.

SIZE :100 x 40
1. QT : 1
2. RED LETTER ON WHITE GROUND.

03_CNP2

CUST. : HHI 1630~	IP :		kW	CNP2	TAIYO ELECTRIC CO., LTD.	TITLE CAUTION NAMEPLATE BOW THRUSTER	DRAW.NO. G3-15334-CNP2	SHEET NO. CNP2
COLOR:	MASS :	CAUTION NAMEPLATE						

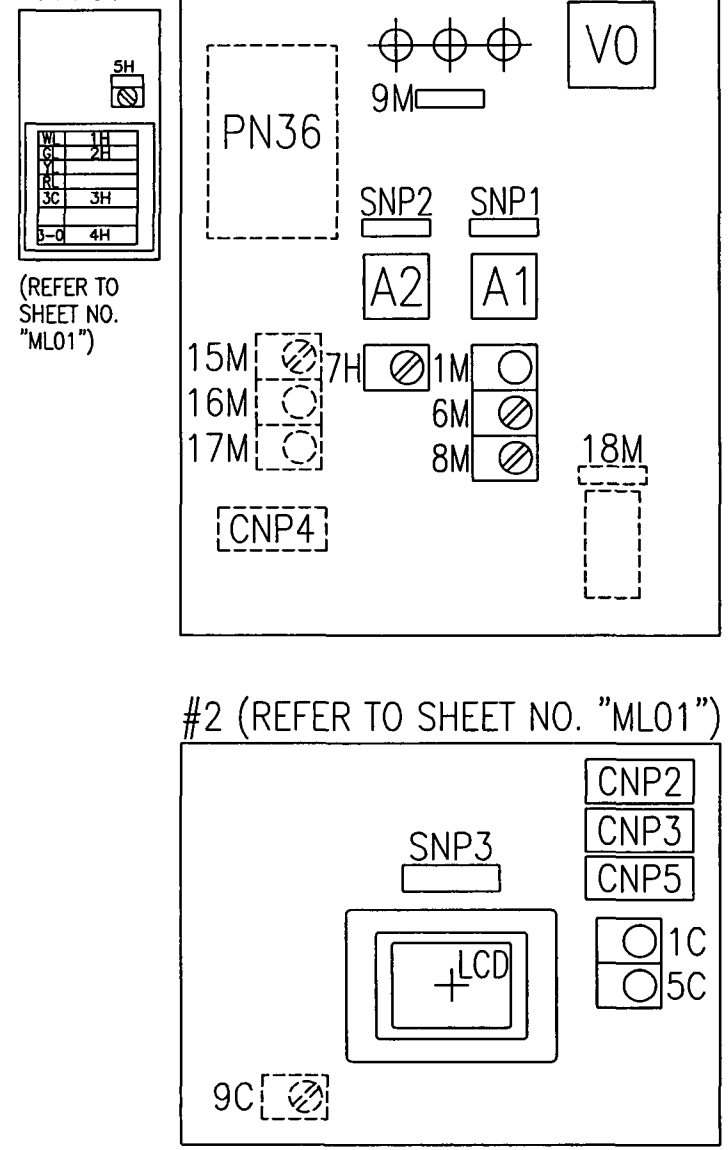

NO.	DESCRIPTION	TH ST MARK	NP	MARK	NP
SNP-B	BOW THRUSTER STARTER PANEL	–	9AH		
SNP-S	STERN THRUSTER STARTER PANEL				
1M	POWER SOURCE AC3300V	WL1	0A6		
2M					
3M					
4M					
5M					
6M	MAIN MOTOR SPACE HEATER OFF – ON	BLMH1 (43MH1)	0A6		
7M					
8M	SPACE HEATER INSIDE PANEL OFF – ON	BLMH4 (43MH4)	0A6		
9M	R S T EARTH LAMP	TLR TLS TLT	4AH		
10M					
11M					
12M					
13M					
14M	GROUND VOLTAGE RELAY	(64)	4AH		
15M	FOR EM'CY OPERATION NORMAL – BY PASS	(43MC1)	0A6		
16M	MAIN MOTOR START	(3CM)	0A6		
17M	MAIN MOTOR STOP	(3–0M)	0A6		
18M	CONTROL SOURCE SWITCH	(52MC)	4AH		
19M					
20M					
21M					
22M					
23M					
24M					
25M					
26M					

NO.	DESCRIPTION	CONTROL PANEL MARK	NP	MARK	NP
SNP1	MAIN MOTOR	–	4AHx1		
SNP2	HYD OIL PUMP	–	4AHx1		
SNP3	CONTROL PANEL	–	13AH		
1C	CONTROL SOURCE	WL2	0A6		
2C					
3C					
4C					
5C	MAIN MOTOR EM'CY STOP	(5EM)	0A6		
6C					
7C					
8C					
9C	POWER CHECK BY PASS NORMAL	(43CC1)	0A6		
10C	CONTROL SOURCE SWITCH	(52CC)	4AH		

NO.	DESCRIPTION	HYD ST MARK	NP	MARK	NP
SNP	HYD OIL PUMP STARTER PANEL	–	–		
1H	SOURCE	WL	SIC		
2H	RUNNING	GL	SIC		
3H	START	(3C)	SIC		
4H	STOP	(3–0)	SIC		
5H	FOR EM'CY OPERATION NORMAL – BY PASS	(43HC1)	10x 24H		
6H					
7H	SPACE HEATER OFF – ON	BL1 (43HC2)	0A6		

CUST. KHI / HHI 1630~	IP		kW	CP1	TAIYO ELECTRIC CO., LTD. 6 5 4 3 2 1	TITLE PANEL ARRANGEMENT & NAME PLATE LIST	DRAW.NO. G3–15334–CP1	CP1	SHEET NO. PA01
COLOR	MASS	BOW THRUSTER STARTER							

SAMPLE PICTURE

MENU PICTURE (P31)

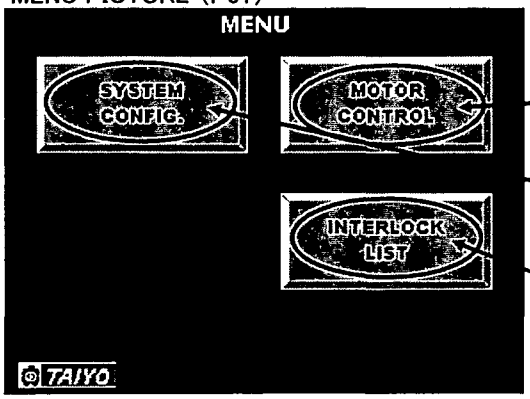

Move to "MOTOR CONTROL" Picture.

Move to "PASSWORD INPUT" Picture.

Move to "INTERLOCK LIST" Picture.

MOTOR CONTROL PICTURE (P32)
< NOT ACTIVE >

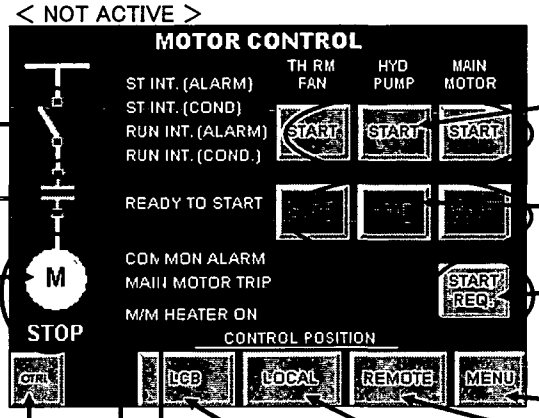

*) This picture indicats, when power on.

Start button & Running indicator for
"MAIN MOTOR","HYD PUMP","FAN"
(Operate with pushing "CTRL")

Stop button for "MAIN MOTOR","HYD PUMP","FAN"
(Operate with pushing "CTRL")

The button for "MAIN MOTOR START REQUEST"
It will flicker, when requesting.
(Operate with pushing "CTRL")

Move to "MENU" Picture.

To select control position
Select "REMOTE CONTROL POSITION"
(Operate with pushing "CTRL")

To select control position
Select "LOCAL CONTROL POSITION"
(Operate with pushing "CTRL")

To select control position
Select "LCB CONTROL POSITION"
(Operate with pushing "CTRL")

"CTRL"

The indicators of each component for each situation.

MOTOR CONTROL PICTURE (P32)
< ACTIVE >

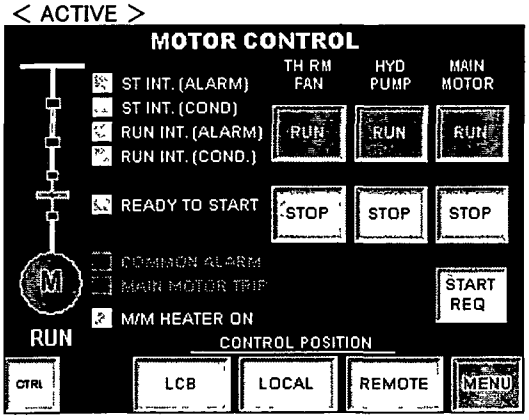

①:"ST INT (ALARM)"
Light on when all input channels (0000~0007) are normal.
②:"ST INT (COND)"
Light on when all input channels (0008~0015) fulfill conditions
③:"RUN INT (ALARM)"
Light on when all input channels (0100~0107) are normal.
④:"RUN INT (COND)"
Light on when all input channels (0108~0115) fulfill conditions.
"READY TO START"
Light on when above all inputs (①~④) are normal & filfull conditions.
Light off when main motor run.
"COMMON ALARM"
Light on even one of above inputs (① & ③) becomes abnormal.
"MAIN MOTOR TRIP"
Light on even one of above inputs (③ & ④) becomes not filfull condition.
And main motor will be tripped.
"M/M HEATER ON"
Light on when "MAIN MOTOR SPACE HEATER" activated.

"INTERLOCK LIST" PICTURE (P21)

SAMPLE PICTURE

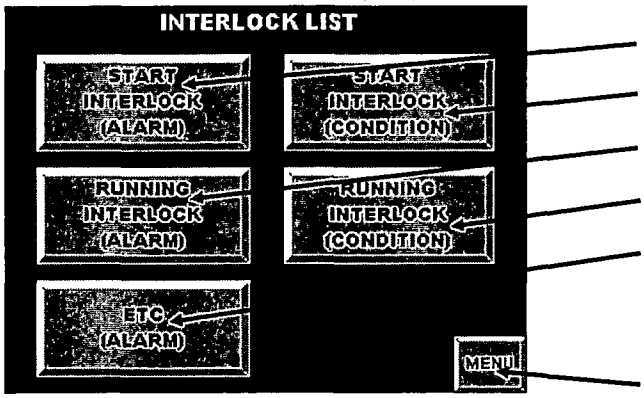

Move to "START INTERLOCK (ALARM)" Picture.

Move to "START INTERLOCK (CONDITION)" Picture.

Move to "RUNNING INTERLOCK (ALARM)" Picture.

Move to "RUNNING INTERLOCK (CONDITION)" Picture.

Move to "ETC (ALARM)" Picture.

Move to "MENU" Picture.

"START INTERLOCK (ALARM)" PICTURE (P22)
<At Normal>

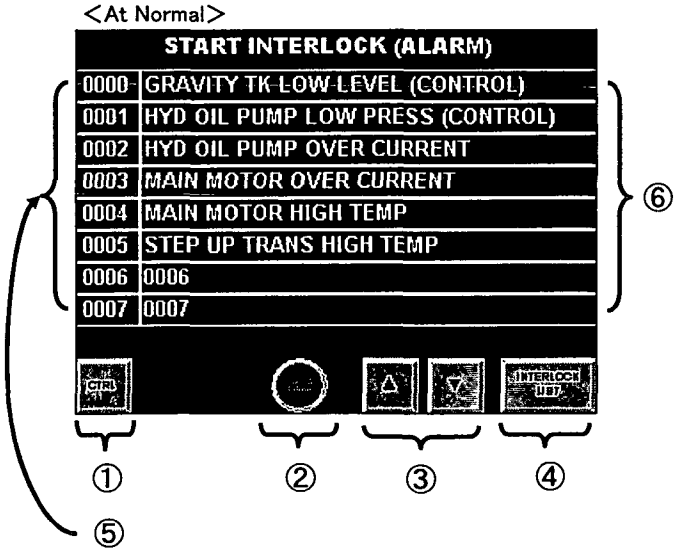

①: "CTRL"

②: "RESET"
(Operate with pushing "CTRL")

③: Move to next or previous Picture.

④: Move to "INTERLOCK LIST" Picture.

⑤: Input channel No.

⑥: Name for each input signal (alarm).
It flickers to white letters on red ground, when alarm happens.

"START INTERLOCK (ALARM)" PICTURE (P22)
< At Abnormal>

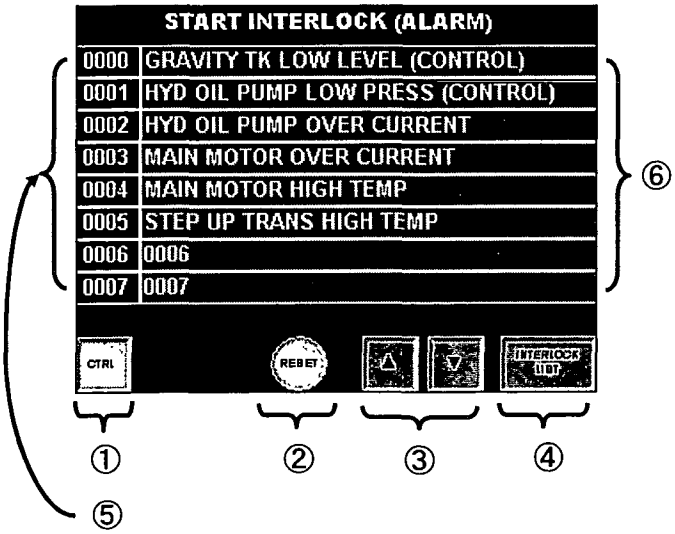

SAMPLE PICTURE

"START INTERLOCK (CONDITION)" PICTURE (P23)
<At not fulfill each conditions>

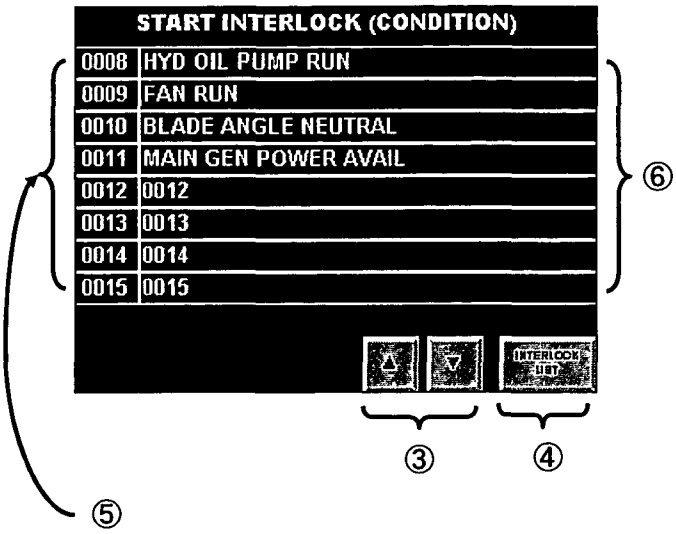

③: Move to next or previous Picture.

④: Move to "INTERLOCK LIST" Picture.

⑤: Input channel No.

⑥: Name for each input signal (condition).
It changes to black letters on yellow ground, when it fulfills the condition.

"START INTERLOCK (CONDITION)" PICTURE (P23)
<At fulfill each conditions>

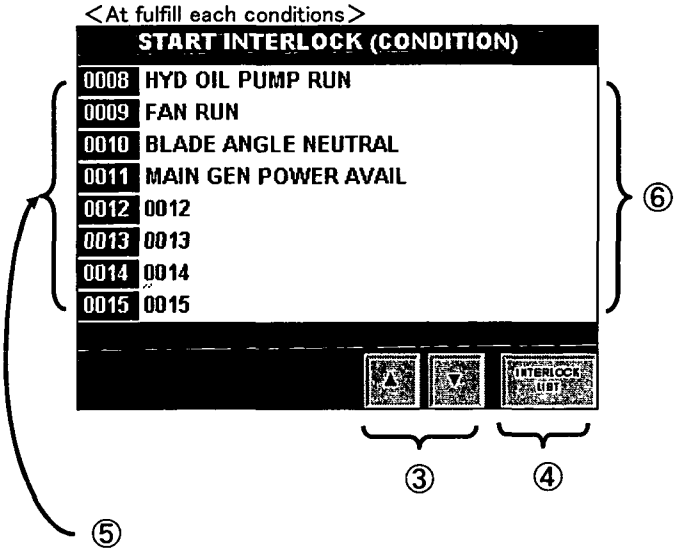

SAMPLE PICTURE

"RUNNING INTERLOCK (ALARM)" PICTURE (P24)

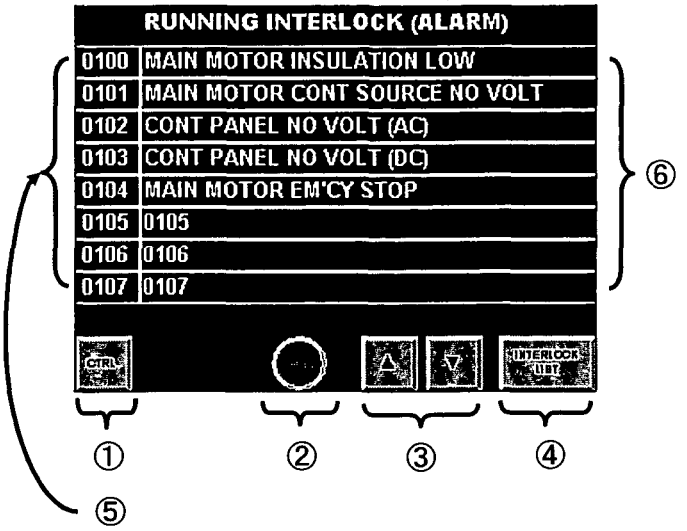

①: "CTRL"

②: "RESET"
(Operate with pushing "CTRL")

③: Move to next or previous Picture.

④: Move to "INTERLOCK LIST" Picture.

⑤: Input channel No.

⑥: Name for each input signal (alarm).
It flickers to white letters on red ground, when alarm happens.

"RUNNING INTERLOCK (CONDITION)" PICTURE (P25)

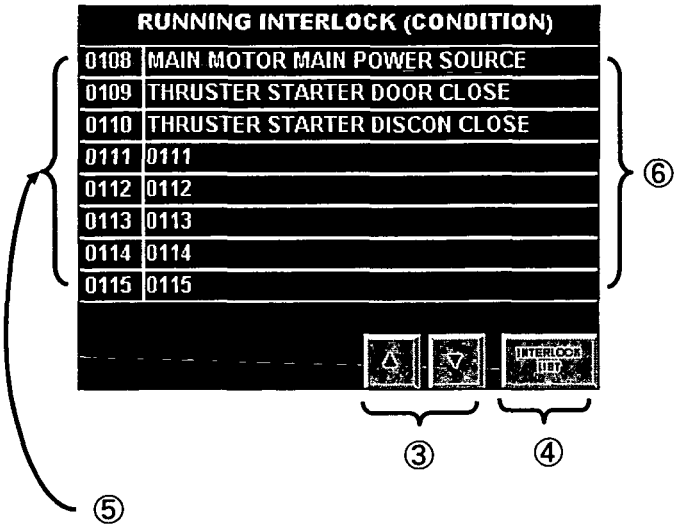

③: Move to next or previous Picture.

④: Move to "INTERLOCK LIST" Picture.

⑤: Input channel No.

⑥: Name for each input signal (condition).
It changes to black letters on yellow ground, when it fulfills the condition.

"ETC (ALARM)" PICTURE (P26)

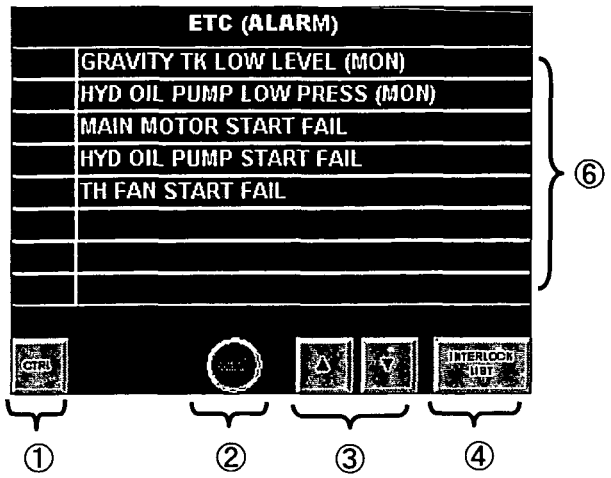

①: "CTRL"

②: "RESET"
(Operate with pushing "CTRL")

③: Move to next or previous Picture.

④: Move to "INTERLOCK LIST" Picture.

⑥: Name for each alarm.
It flickers to white letters on red ground, when alarm happens.

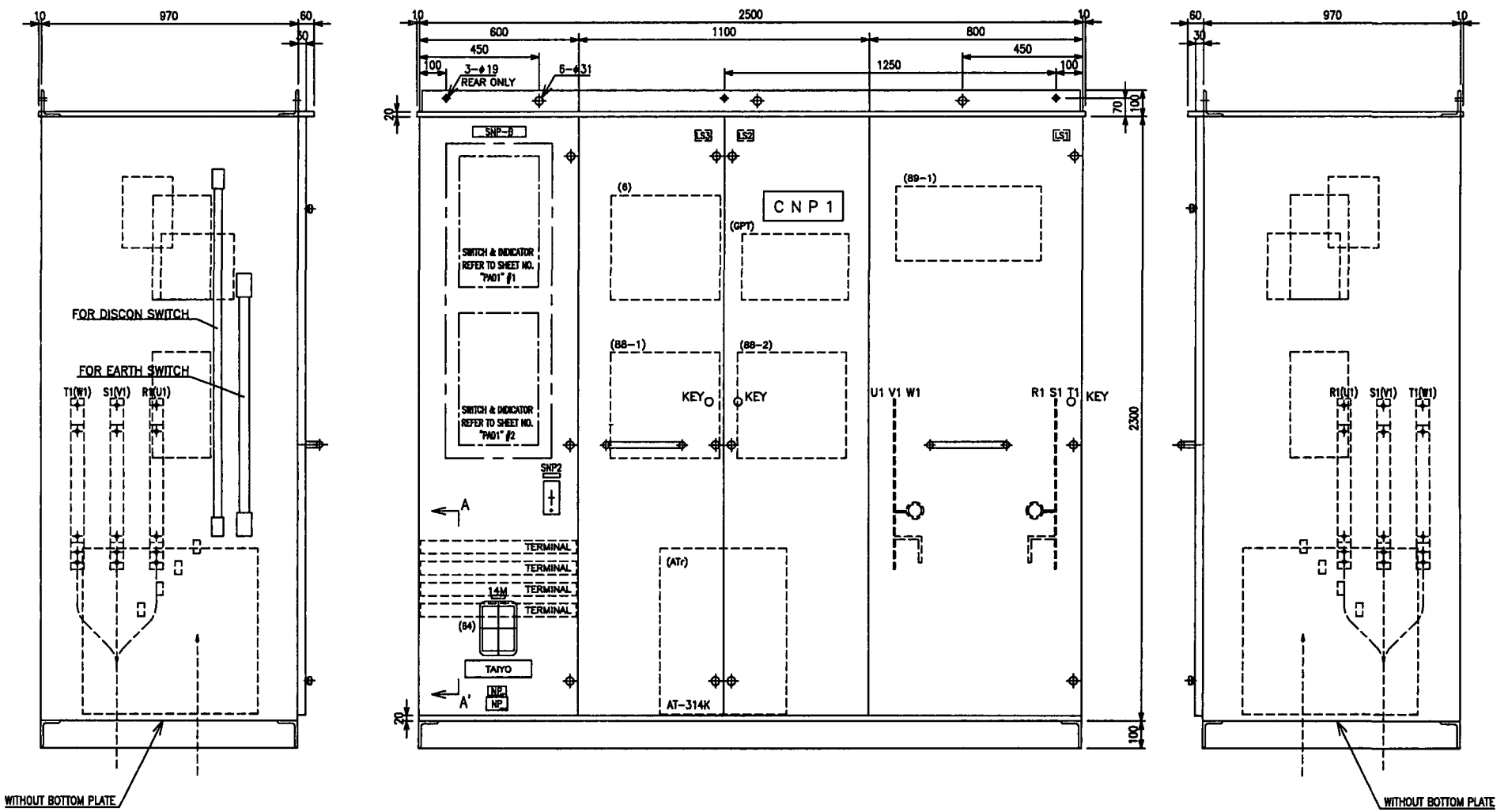

MAINTENANCE
FRONT SIDE ONLY

KHI / HHI H1630/H1631/H1671/H1672

CUST. ~~KHI / HHI 1630~~	IP 44	AC3.3KV	1335 kW	1L1	TAIYO ELECTRIC CO., LTD.	TITLE	DRAW.NO.		SHEET NO.
COLOR	MASS Ca 1700Kg	BOW THRUSTER STARTER PANEL			8 7 6 5 4 3 2 1	OUTLINE	G3-15334-1L1		ML01

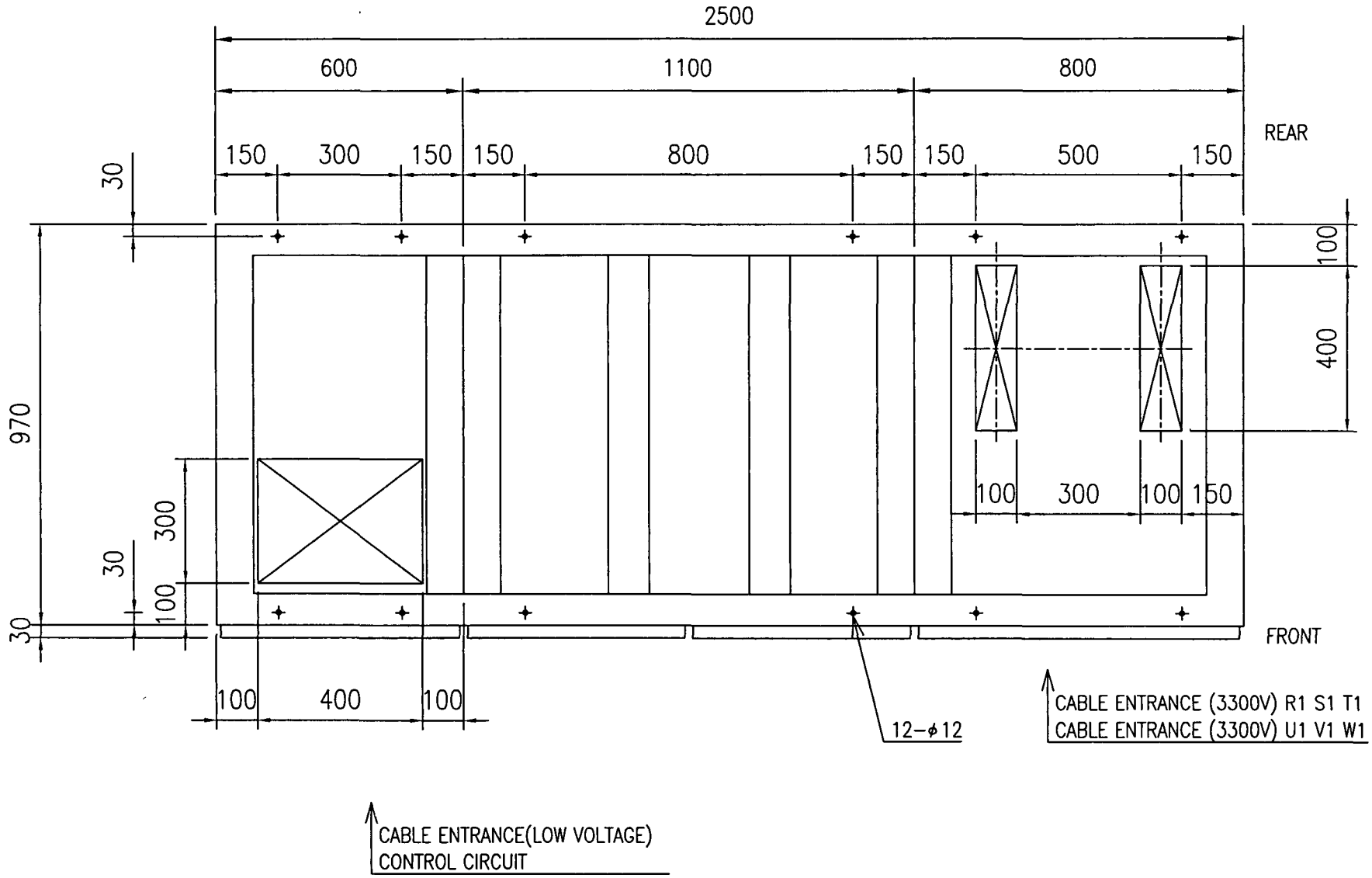

CUST. : KHI / HHI 1630~	IP :		kW 1L2	TAIYO ELECTRIC CO., LTD. 2 1	TITLE	DRAW.NO.	SHEET NO.
COLOR :	MASS :	BOW THRUSTER STARTER PANEL			OUTLINE	G3-15334-1L2	ML02

04_ML02

kW		BOW THRUSTER STARTER PANEL		PAG1
CUST : KHI / HHI 1630~	COLOR:	IP:	MASS :	

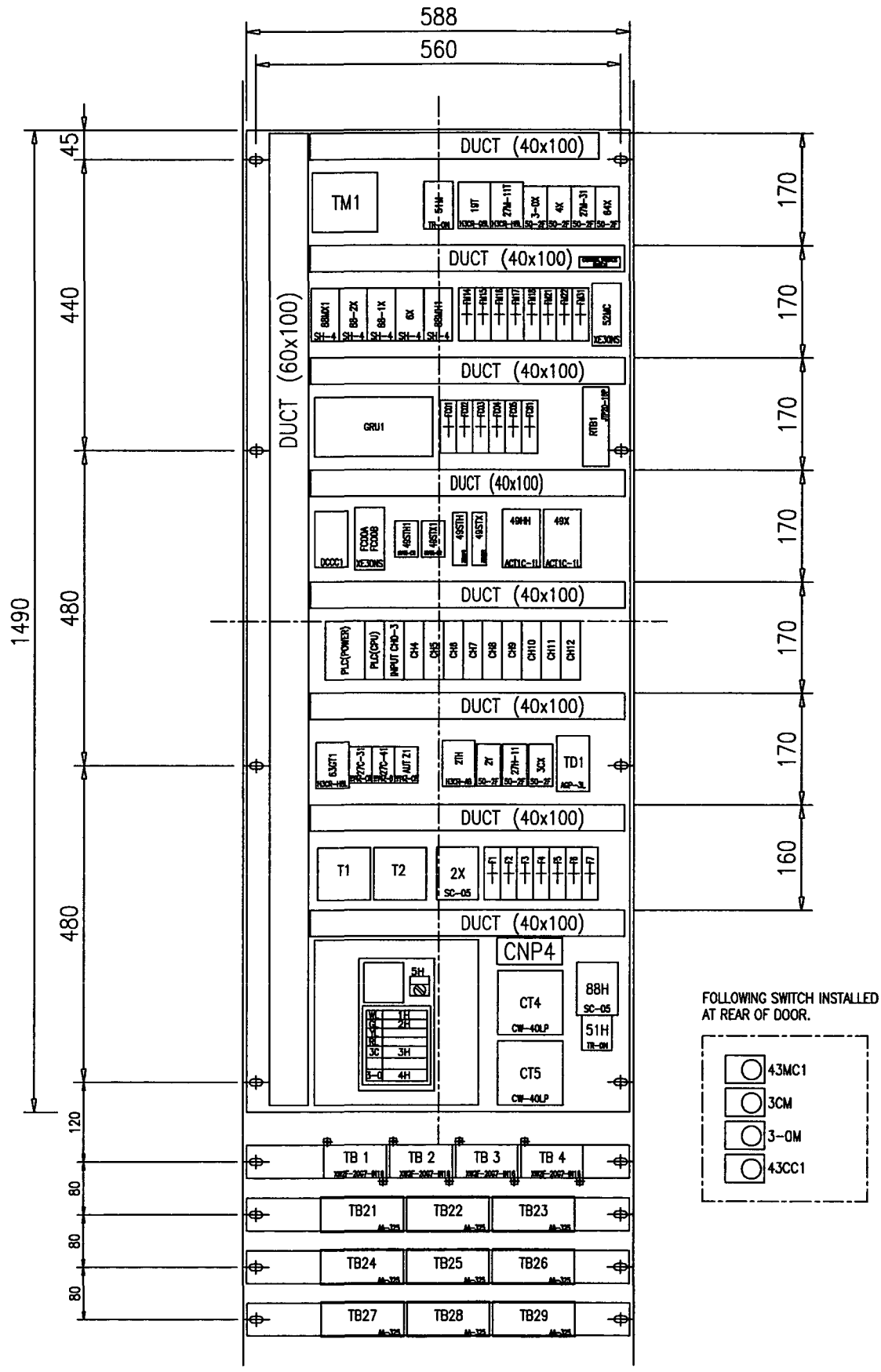

TAIYO ELECTRIC CO., LTD.	TITLE	DRAW.NO.		SHEET NO.
2 1	PARTS ARRANGEMENT	G3-15334-PAG1	PAG1	PAG1

04_MLO3

PAG1

A–A' View

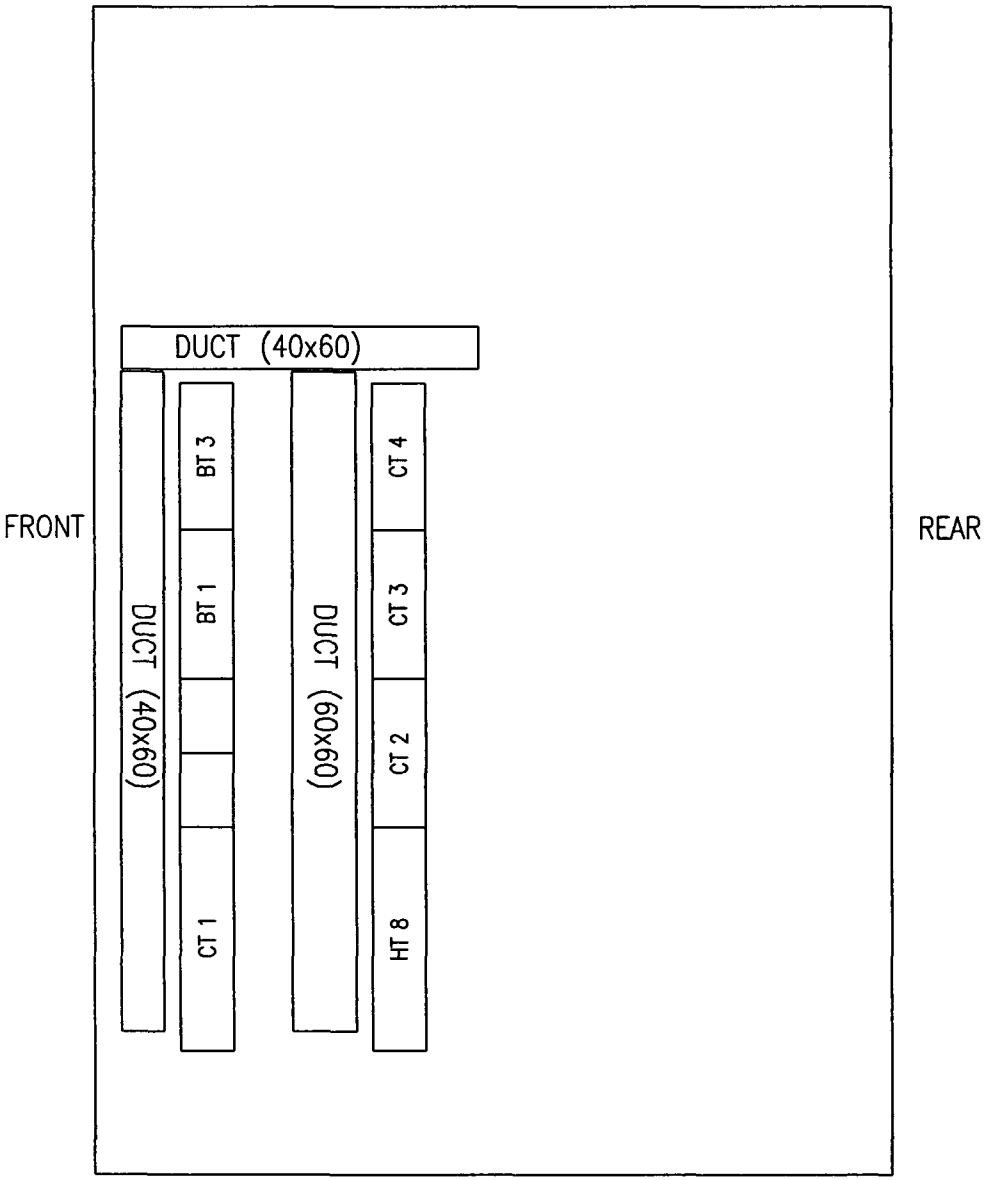

CUST. : KHI / HHI 1630~	IP :		kW	PAG2	TAIYO ELECTRIC CO., LTD.	TITLE	DRAW.NO.	SHEET NO.
COLOR:	MASS :	BOW THRUSTER STARTER PANEL				PARTS ARRANGEMENT	G3–15334–PAG2 PAG2	PAG2

04_ML04

BT1

4C-TY870-3W-25P

TERMINAL NO	1	2	3	4	5	6	7	8	9	10	11	12	13	14	15	16	17	18	19	20	21	22	23	24	25
USE	M.M				MSB		ECC						W/H												
SYMBOL	MH1	MH2			DS1	DS2	T60	OT60					T55	T58	T59	T60A									
CORE NO	1	2	3	4	5	6	7	8	9	10	11	12	13	14	15	16	17	18	19	20	21	22	23	24	25
CABLE NO																									
CABLE CLASS																									

JTP20-16P

USE																
SYMBOL																
CABLE NO/SIZE																
CORE NO																

4C-TY870-3W-25P

TERMINAL NO	1	2	3	4	5	6	7	8	9	10	11	12	13	14	15	16	17	18	19	20	21	22	23	24	25
USE																									
SYMBOL																									
CORE NO	1	2	3	4	5	6	7	8	9	10	11	12	13	14	15	16	17	18	19	20	21	22	23	24	25
CABLE NO																									
CABLE CLASS																									

USE																
SYMBOL																
CABLE NO/SIZE																
CORE NO																

BT3

4C-TY870-3W-25P

TERMINAL NO	1	2	3	4	5	6	7	8	9	10	11	12	13	14	15	16	17	18	19	20	21	22	23	24	25
USE	MAIN MOTOR / WH																								
SYMBOL	U1	U2	U3	V1	V2	V3	W1	W2	W3																
CORE NO	1	2	3	4	5	6	7	8	9	10	11	12	13	14	15	16	17	18	19	20	21	22	23	24	25
CABLE NO																									
CABLE CLASS																									

USE																
SYMBOL																
CABLE NO/SIZE																
CORE NO																

4C-TY870-3W-25P

TERMINAL NO	1	2	3	4	5	6	7	8	9	10	11	12	13	14	15	16	17	18	19	20	21	22	23	24	25
USE																									
SYMBOL																									
CORE NO	1	2	3	4	5	6	7	8	9	10	11	12	13	14	15	16	17	18	19	20	21	22	23	24	25
CABLE NO																									
CABLE CLASS																									

<< BAR >> << BAR >>

USE	MAIN MOTOR			S/T												
SYMBOL	U1	V1	W1	R1	S1	T1										
CABLE NO/SIZE	●●●			●●●												
	3×TPYC-50			3×TPYC-50.												
CORE NO	R	W	B	R	W	B										

CUST. : HHI 1630~	IP :		kW	MT1	TAIYO ELECTRIC CO., LTD.	TITLE	DRAW.NO.	SHEET NO.
COLOR:	MASS :	STARTER PANEL for BOW THRUSTER			4 3 2 1	TERMINAL ARRANGEMENT	G3-15334-MT1	MT01

05A_MT01

MT01

CT1

< TE-K5.5-3P > < TE-K5.5-3P >

USE				W/H			HYD UNIT			
SYMBOL				T1V	T2V	T3V	T1V	T2V	T3V	
CABLE NO/SIZE				●●●			●●●			
				TPYC-4			TPYC-4			
CORE NO				R	W	B	R	W	B	

JTP20-16P

USE																	
SYMBOL																	
CABLE NO/SIZE																	
CORE NO																	

CT2

4C-TY870-3W-25P

TERMINAL NO	1	2	3	4	5	6	7	8	9	10	11	12	13	14	15	16	17	18	19	20	21	22	23	24	25
USE	HYD UNIT		FAN ST						LCB				HYD ST		TH ST						W/H				
SYMBOL	BK3	BK4	F1	F2					MC1	MC2	HC1	HC2	HB1	HB2	CP4	CP5	BB1	BB2			T3	T4	T5E	T6E	
CORE NO	1	2	3	4	5	6	7	8	9	10	11	12	13	14	15	16	17	18	19	20	21	22	23	24	25
CABLE NO																									
CABLE CLASS																									

JTP20-16P

USE																	
SYMBOL																	
CABLE NO/SIZE																	
CORE NO																	

CT3

4C-TY870-3W-25P

TERMINAL NO	1	2	3	4	5	6	7	8	9	10	11	12	13	14	15	16	17	18	19	20	21	22	23	24	25
USE	W/H						MAIN MOTOR				S/T				ECC		MSB		FIN STA					EPB	
SYMBOL	T6	T7	T12	T13	T17	T18	PTT1	PTT2	PTT3	PTT4	PTT5	PTT6	PTT7	PTT8	MA1	MA2	MA3	MA4	SLZ1	SLZ2				OT5E	T5E
CORE NO	1	2	3	4	5	6	7	8	9	10	11	12	13	14	15	16	17	18	19	20	21	22	23	24	25
CABLE NO																									
CABLE CLASS																									

JTP20-16P

USE																	
SYMBOL																	
CABLE NO/SIZE																	
CORE NO																	

CT4

4C-TY870-3W-25P

TERMINAL NO	1	2	3	4	5	6	7	8	9	10	11	12	13	14	15	16	17	18	19	20	21	22	23	24	25
USE	ECC		W/H																						
SYMBOL	DS7	DS8	T50	T51																					
CORE NO	1	2	3	4	5	6	7	8	9	10	11	12	13	14	15	16	17	18	19	20	21	22	23	24	25
CABLE NO																									
CABLE CLASS																									

RTB1

JTP20-16P

USE																
SYMBOL	250	251	250	251	PC	NC	PC	NC	PC	NC	PC	NC	PC	NC	PC	NC
CABLE NO/SIZE	INNER WIRING		INNER WIRING		INNER WIRING		INNER WIRING		INNER WIRING		INNER WIRING		INNER WIRING		INNER WIRING	
CORE NO																

CUST. . HHI 1630~	IP .		kW	CT1	TAIYO ELECTRIC CO., LTD. 4 3 2 1	TITLE	DRAW.NO.		SHEET NO.
COLOR:	MASS :	CONTROL PANEL for BOW THRUSTER				TERMINAL ARRANGEMENT	G3-15334-CT1		CT01

05B_CT01

4C-TY870-3W-25P

TERMINAL NO	1	2	3	4	5	6	7	8	9	10	11	12	13	14	15	16	17	18	19	20	21	22	23	24	25
USE																									
SYMBOL																									
CORE NO	1	2	3	4	5	6	7	8	9	10	11	12	13	14	15	16	17	18	19	20	21	22	23	24	25
CABLE NO																									
CABLE CLASS																									

JTP20-16P

USE																
SYMBOL																
CABLE NO/SIZE																
CORE NO																

4C-TY870-3W-25P

TERMINAL NO	1	2	3	4	5	6	7	8	9	10	11	12	13	14	15	16	17	18	19	20	21	22	23	24	25
USE																									
SYMBOL																									
CORE NO	1	2	3	4	5	6	7	8	9	10	11	12	13	14	15	16	17	18	19	20	21	22	23	24	25
CABLE NO																									
CABLE CLASS																									

JTP20-16P

USE																
SYMBOL																
CABLE NO/SIZE																
CORE NO																

4C-TY870-3W-25P

TERMINAL NO	1	2	3	4	5	6	7	8	9	10	11	12	13	14	15	16	17	18	19	20	21	22	23	24	25
USE																									
SYMBOL																									
CORE NO	1	2	3	4	5	6	7	8	9	10	11	12	13	14	15	16	17	18	19	20	21	22	23	24	25
CABLE NO																									
CABLE CLASS																									

JTP20-16P

USE																
SYMBOL																
CABLE NO/SIZE																
CORE NO																

4C-TY870-3W-25P

TERMINAL NO	1	2	3	4	5	6	7	8	9	10	11	12	13	14	15	16	17	18	19	20	21	22	23	24	25
USE																									
SYMBOL																									
CORE NO	1	2	3	4	5	6	7	8	9	10	11	12	13	14	15	16	17	18	19	20	21	22	23	24	25
CABLE NO																									
CABLE CLASS																									

HT8

	<<TE-K14-3P>>												<<TE-K14-3P>>		
USE															
SYMBOL	U2	V2	W2										R2	S2	T2
CABLE NO/SIZE	●●●												●●●		
	TPYCY-4												TPYC-4		
CORE NO															

CUST : HHI 1630~	IP		kW	HT1	TAIYO ELECTRIC CO., LTD	TITLE	DRAW NO	SHEET NO
COLOR	MASS	HYD OIL PUMP for BOW THRUSTER			2 1	TERMINAL ARRANGEMENT	G3-15334-HT1	HT01

05C_HT01

HT01

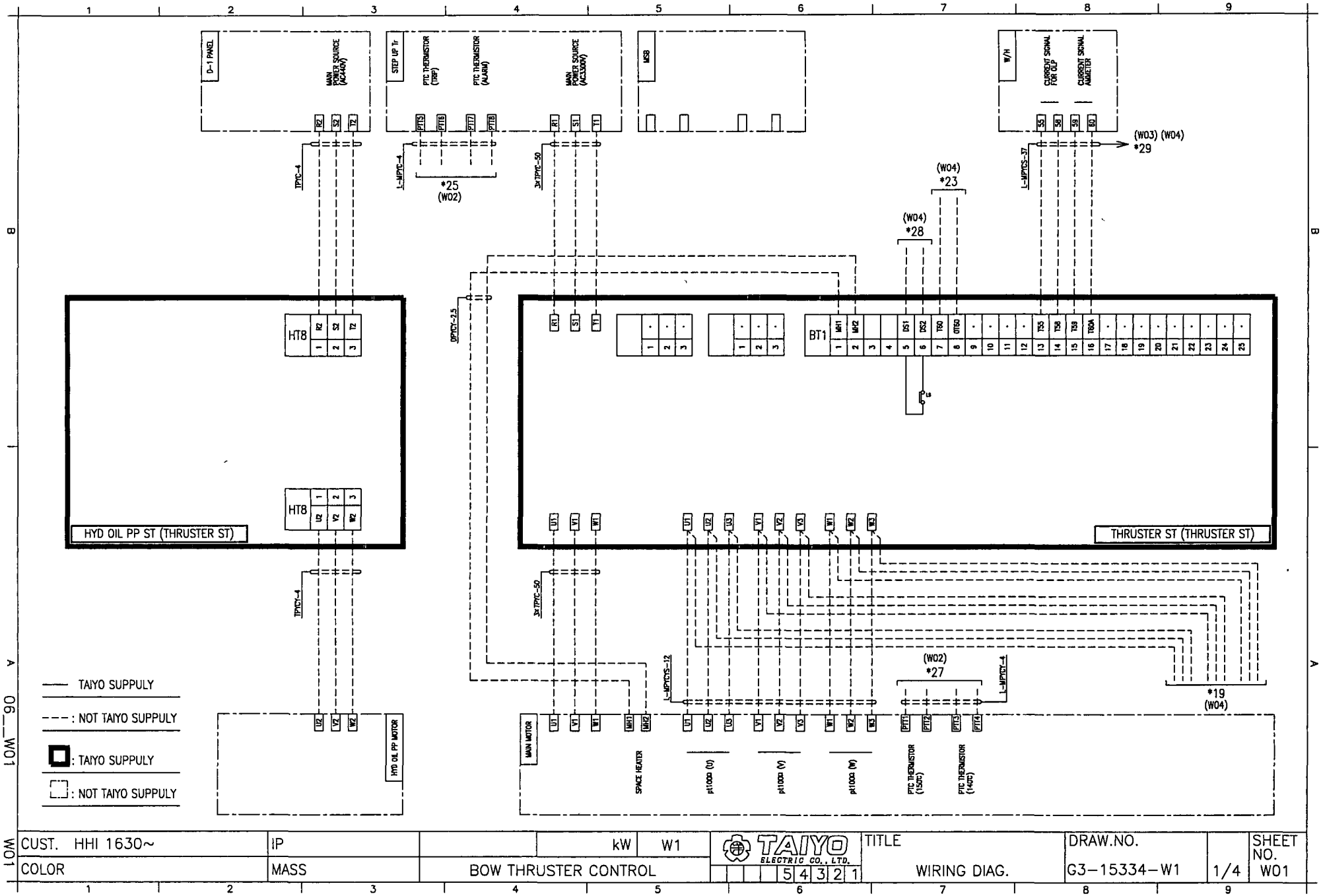

CUST. HHI 1630~	IP		kW	W1	TAIYO ELECTRIC CO., LTD.	TITLE	DRAW.NO.	SHEET NO.
COLOR	MASS	BOW THRUSTER CONTROL			5 4 3 2 1	WIRING DIAG.	G3-15334-W1	1/4 W01

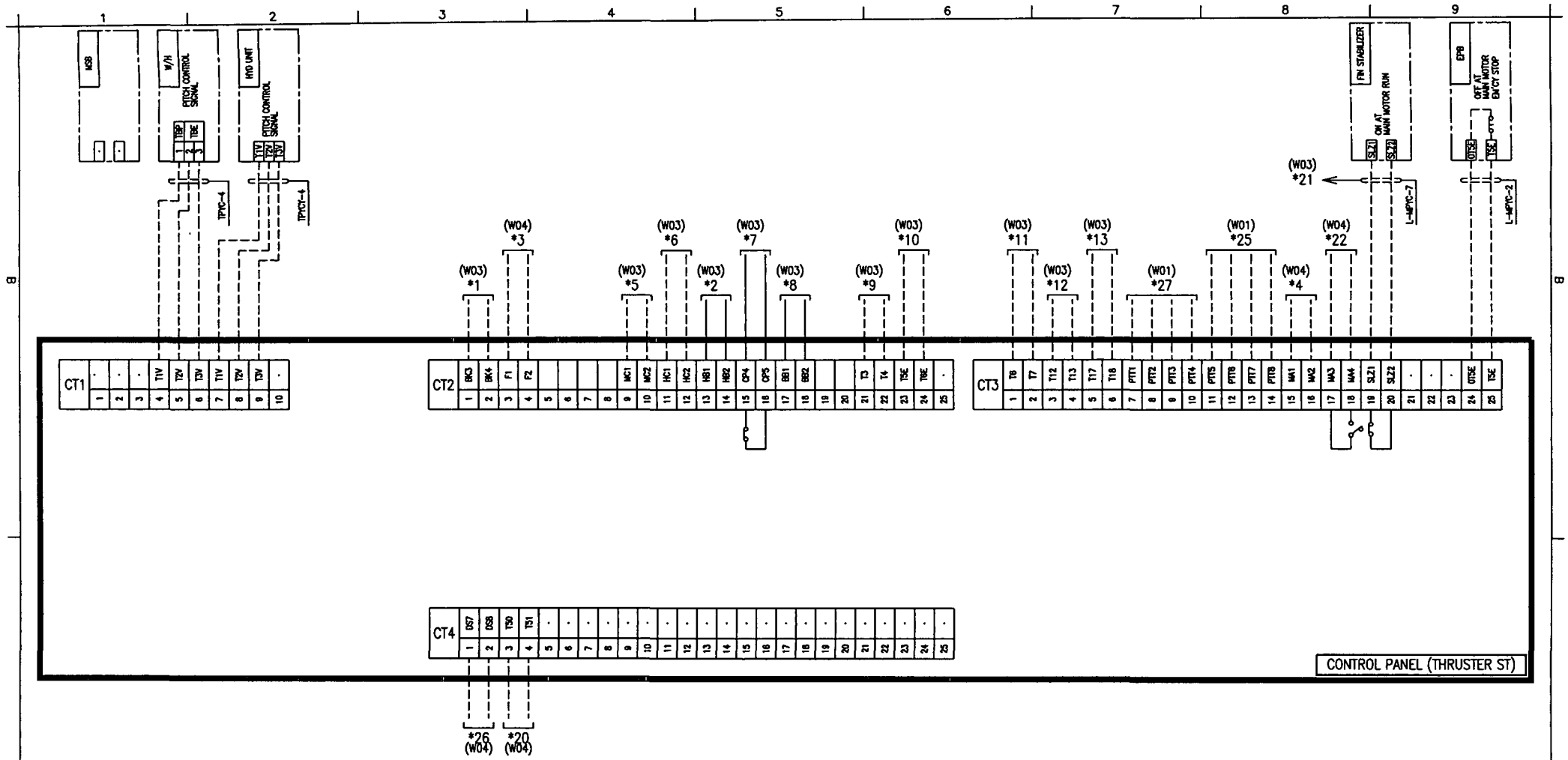

——: TAIYO SUPPULY

---: NOT TAIYO SUPPULY

■: TAIYO SUPPULY

□: NOT TAIYO SUPPULY

CUST. : HHI 1630~	IP :		kW	W1	TAIYO ELECTRIC CO., LTD. 4 3 2 1	TITLE	DRAW.NO.	SHEET NO.
COLOR:	MASS :	BOW THRUSTER CONTROL				WIRING DIAG.	G3-15334-W1	2/4 W02

06__W02

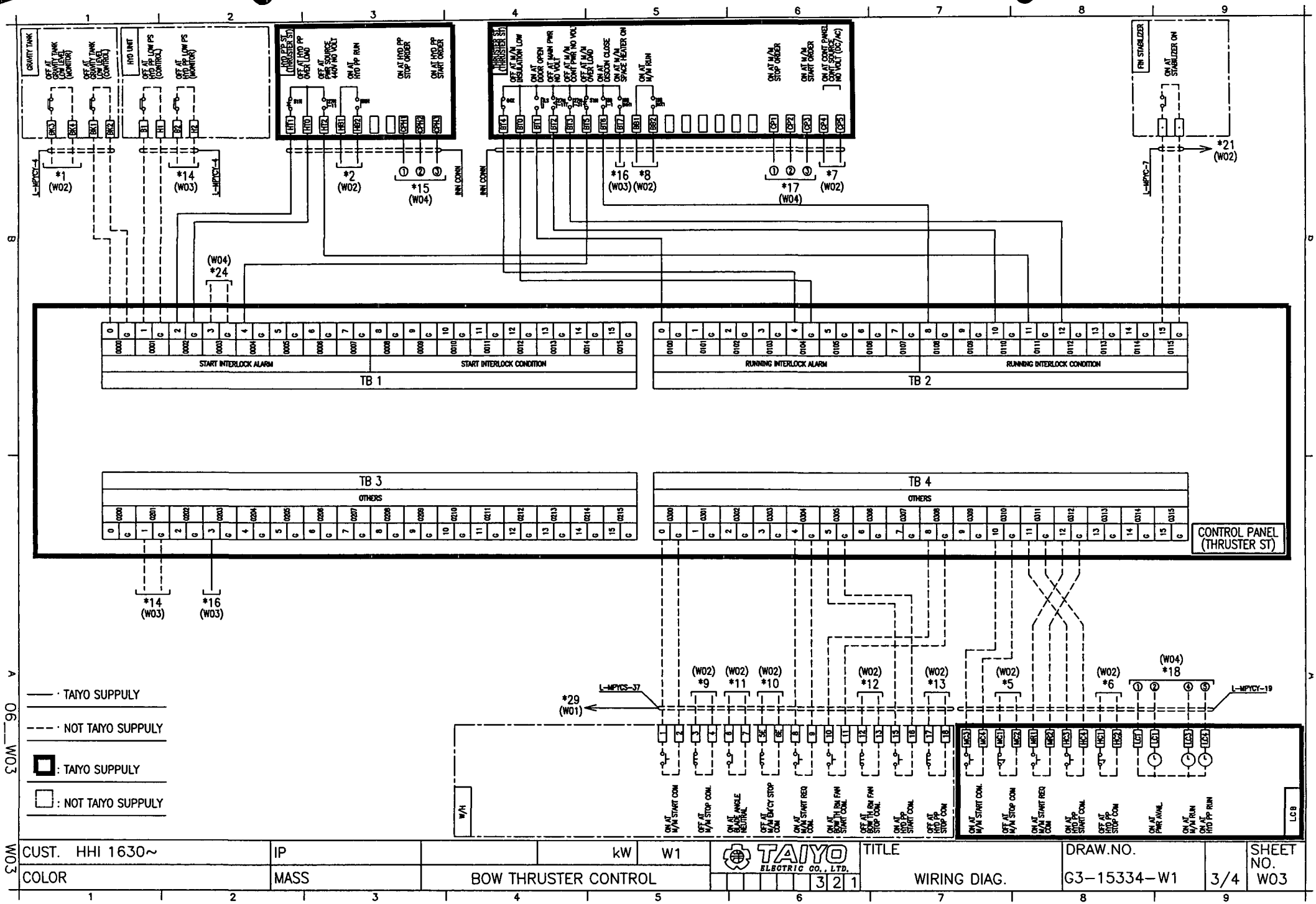

CUST. HHI 1630~	IP		kW	W1	TAIYO ELECTRIC CO., LTD.	TITLE	DRAW.NO.	SHEET NO.
COLOR	MASS	BOW THRUSTER CONTROL			3 2 1	WIRING DIAG.	G3-15334-W1 3/4	W03

06_W03

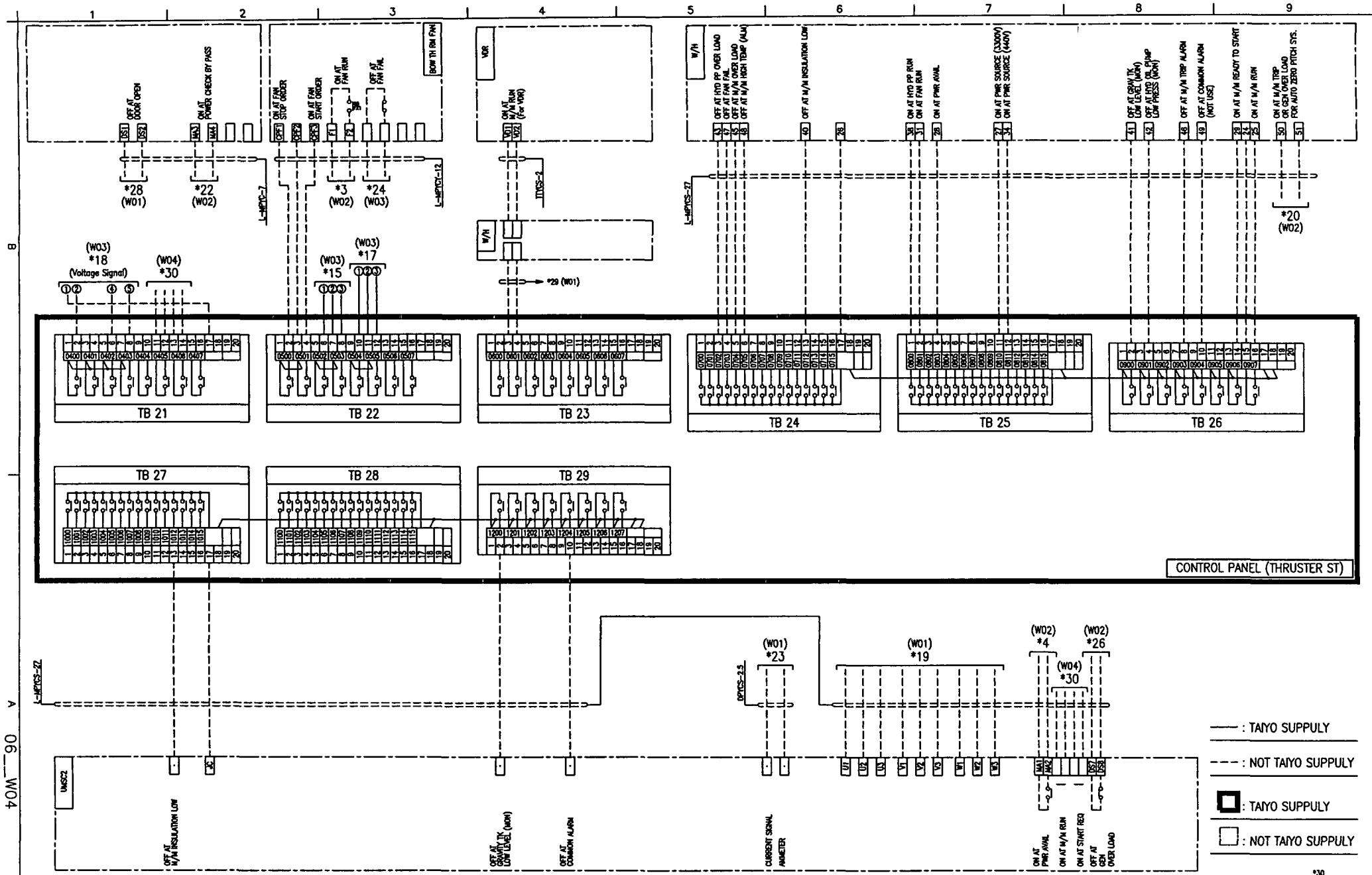

CUST. HHI 1630~	IP		kW	W1	TAIYO ELECTRIC CO., LTD.	TITLE	DRAW.NO.		SHEET NO.
COLOR	MASS .	BOW THRUSTER CONTROL			6 5 4 3 2 1	WIRING DIAG.	G3-15334-W1	4/4	W04

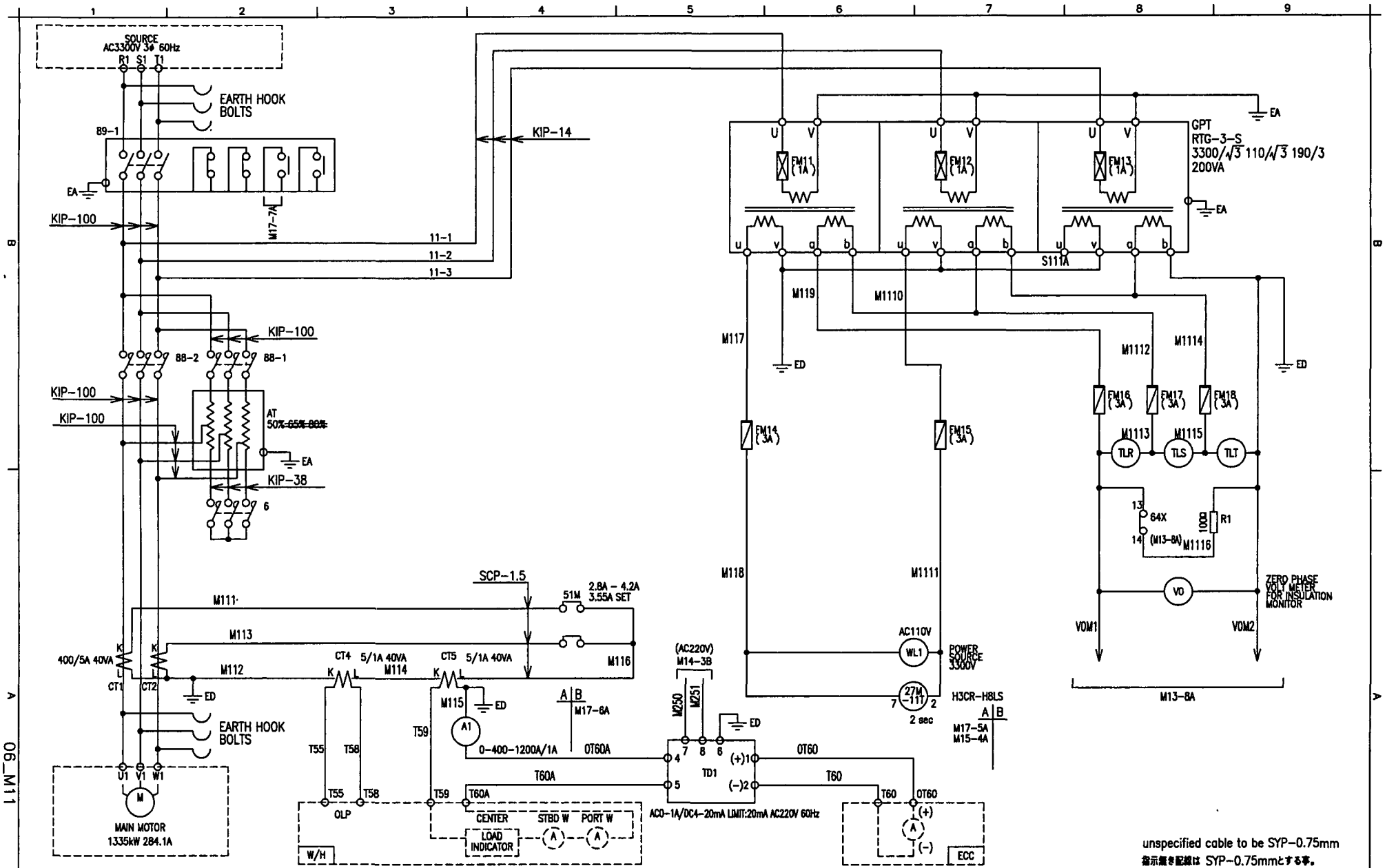

CUST. HHI 1630~	IP		kW	1	TAIYO 5 4 3 2 1	TITLE	DRAW.NO.	SHEET NO.
COLOR	MASS	BOW THRUSTER STARTER				CONNECTION DIAG.	G3-15334-1	M11

M11 06_M11

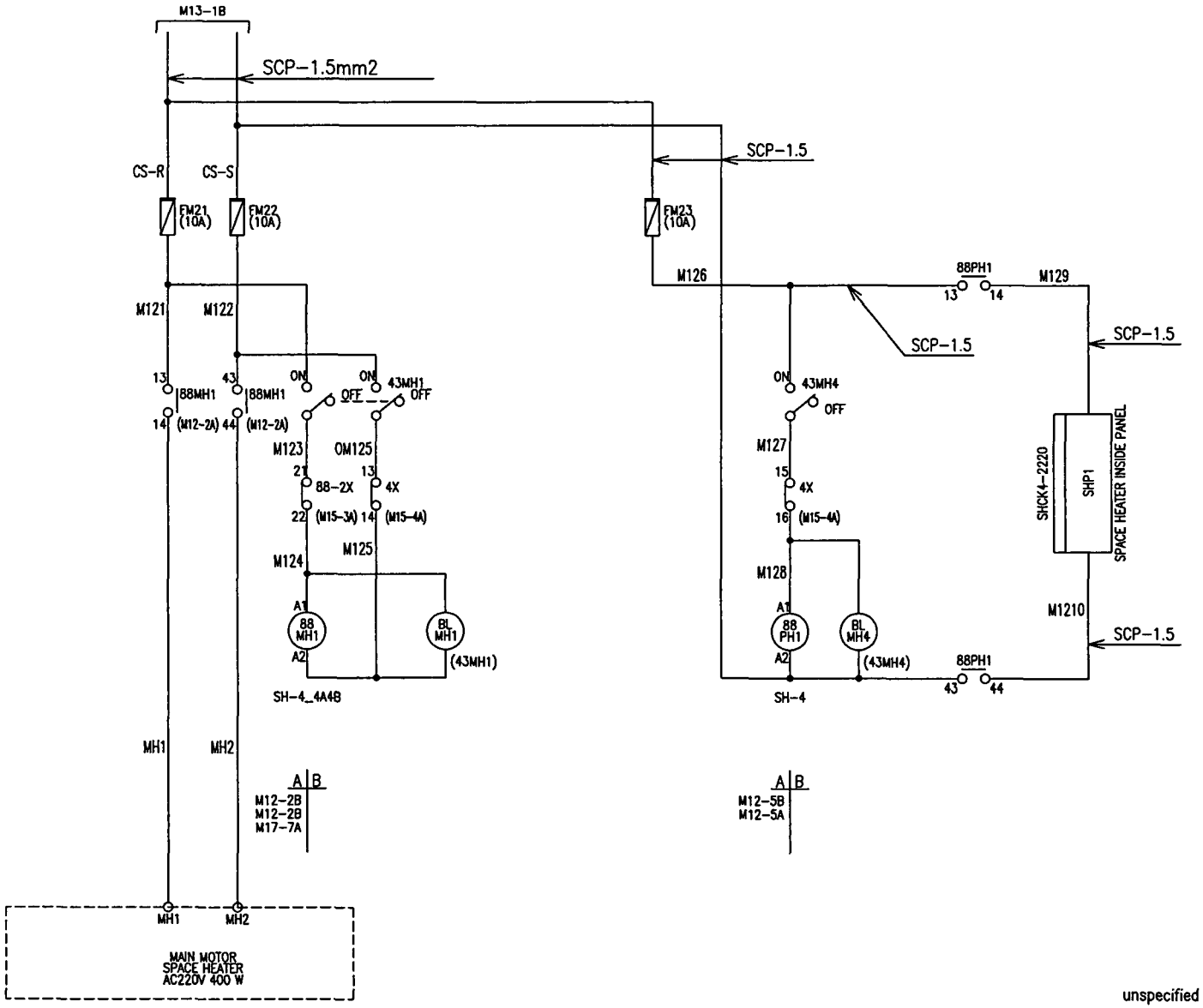

unspecified cable to be SYP-0.75mm
指示無き配線は SYP-0.75mmとする事。

CUST. . HHI 1630~	IP		kW	1	TAIYO ELECTRIC CO., LTD.	TITLE	DRAW.NO.		SHEET NO.
COLOR:	MASS .	BOW THRUSTER STARTER			1	CONNECTION DIAG.	G3-15334-1	M12	M12

'SCAD2¥SCAD¥ZUMEN¥船用¥物件図面¥川崎重工業¥THRUSTER¥☆_川重神戸／現代_H1630シリーズ¥001¥BOW¥06_M12.DWG, 2005/10/13 10:35:02, TG121
06_M12
M12

¥SCAD2¥SCAD¥ZUMEN¥船用¥物件図面¥川崎重工業¥THRUSTER¥☆_川重神戸／現代_H1630シリーズ¥001¥BOW¥06_M13.DWG, 2005/10/13 10:16:35, TG121

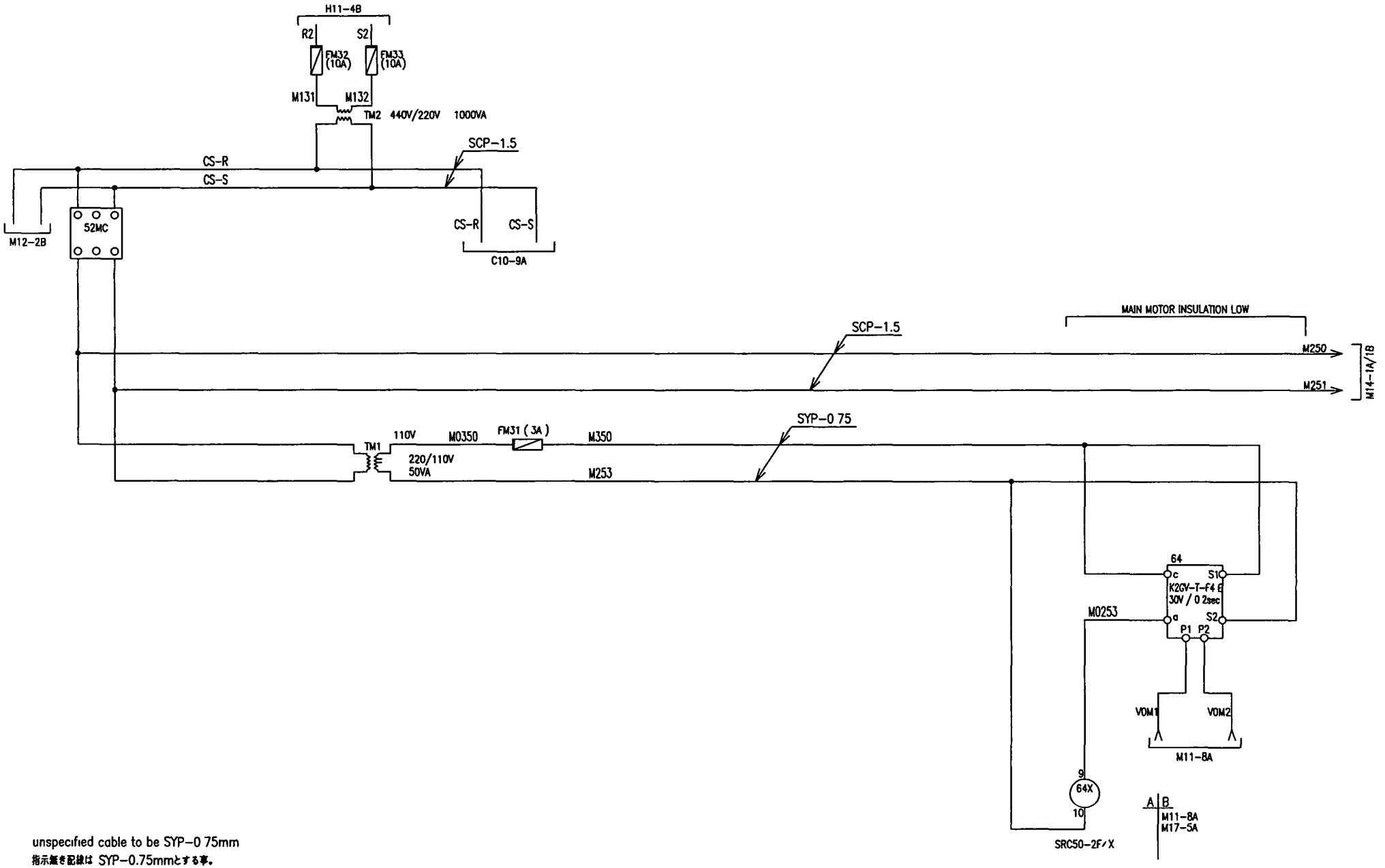

unspecified cable to be SYP-0 75mm
指示無き配線は SYP-0.75mmとする事。

CUST. HHI 1630~	IP		kW	1	TAIYO ELECTRIC CO., LTD. 3 2 1	TITLE	DRAW.NO.	SHEET NO.
COLOR	MASS	BOW THRUSTER STARTER				CONNECTION DIAG.	G3-15334-1 M13	M13

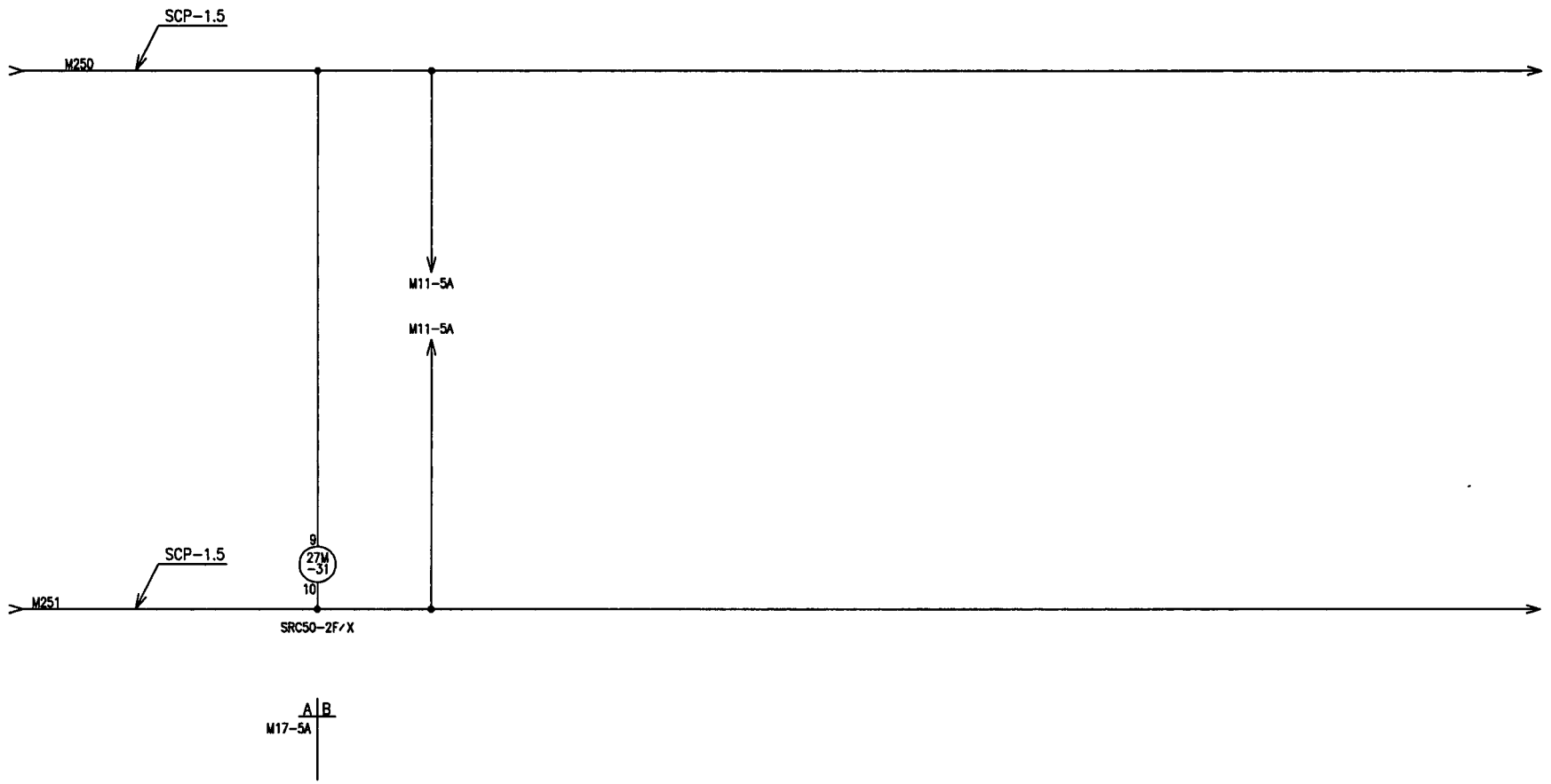

unspecified cable to be SYP-0.75mm
指示無き配線は SYP-0.75mmとする事。

CUST. HHI 1630~	IP		kW	1	TAIYO ELECTRIC CO., LTD.	TITLE	DRAW.NO.		SHEET NO.
COLOR	MASS	BOW THRUSTER STARTER			2 1	CONNECTION DIAG.	G3-15334-1	M14	M14

06_M14

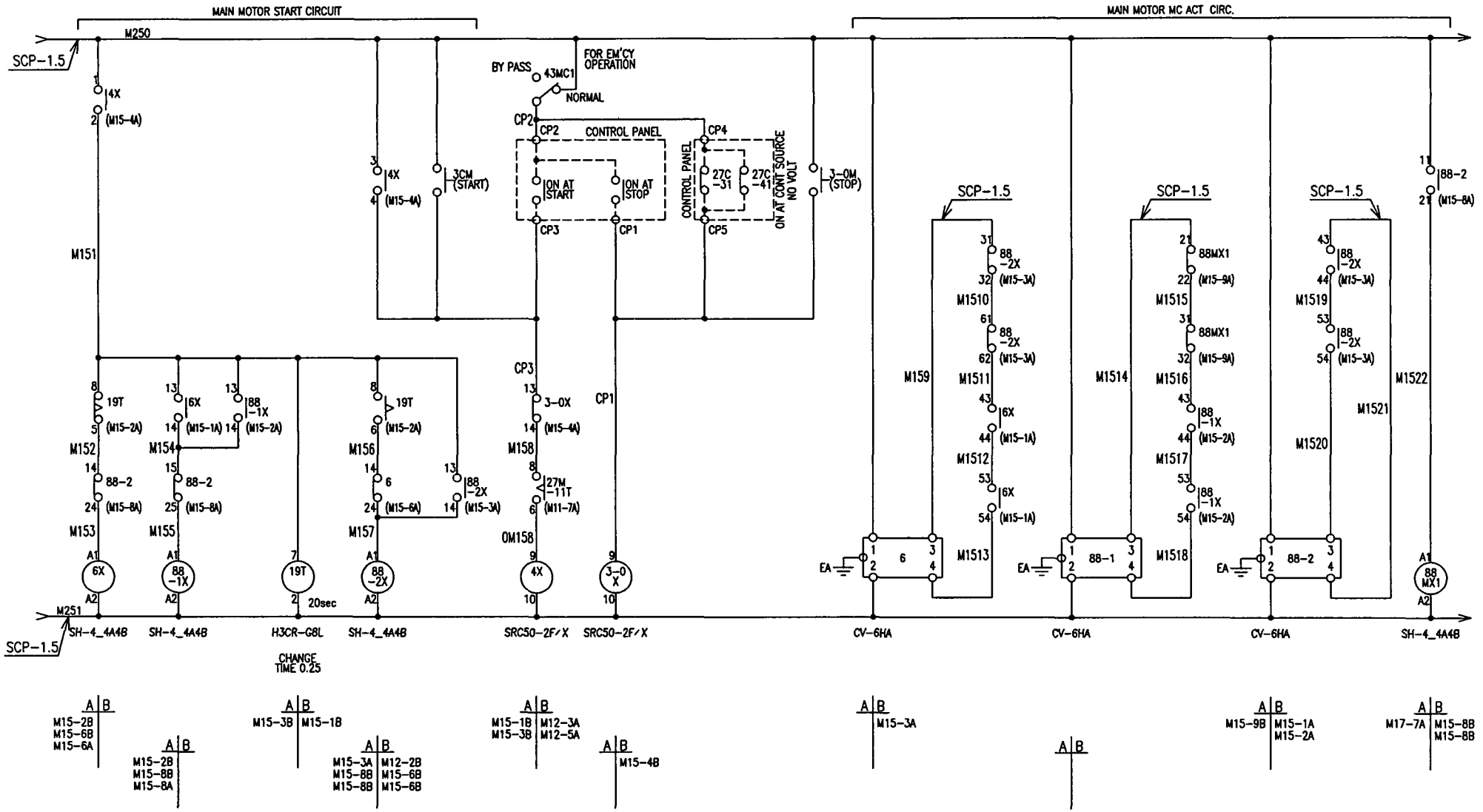

unspecified cable to be SYP-0.75mm
指示無き配線は SYP-0.75mmとする事。

CUST. HHI 1630~	IP		kW	1	TAIYO ELECTRIC CO., LTD.	TITLE	DRAW.NO.	SHEET NO.
COLOR	MASS	BOW THRUSTER STARTER			3 2 1	CONNECTION DIAG.	G3-15334-1 M15	M15

¥¥SCAD2¥SCAD¥ZUMEN¥船用¥物件図面¥川崎重工業¥THRUSTER¥☆_川重神戸／現代_H1630シリーズ¥001¥BOW06_M15 DWG, 2005/10/13 10:16:38, TG121

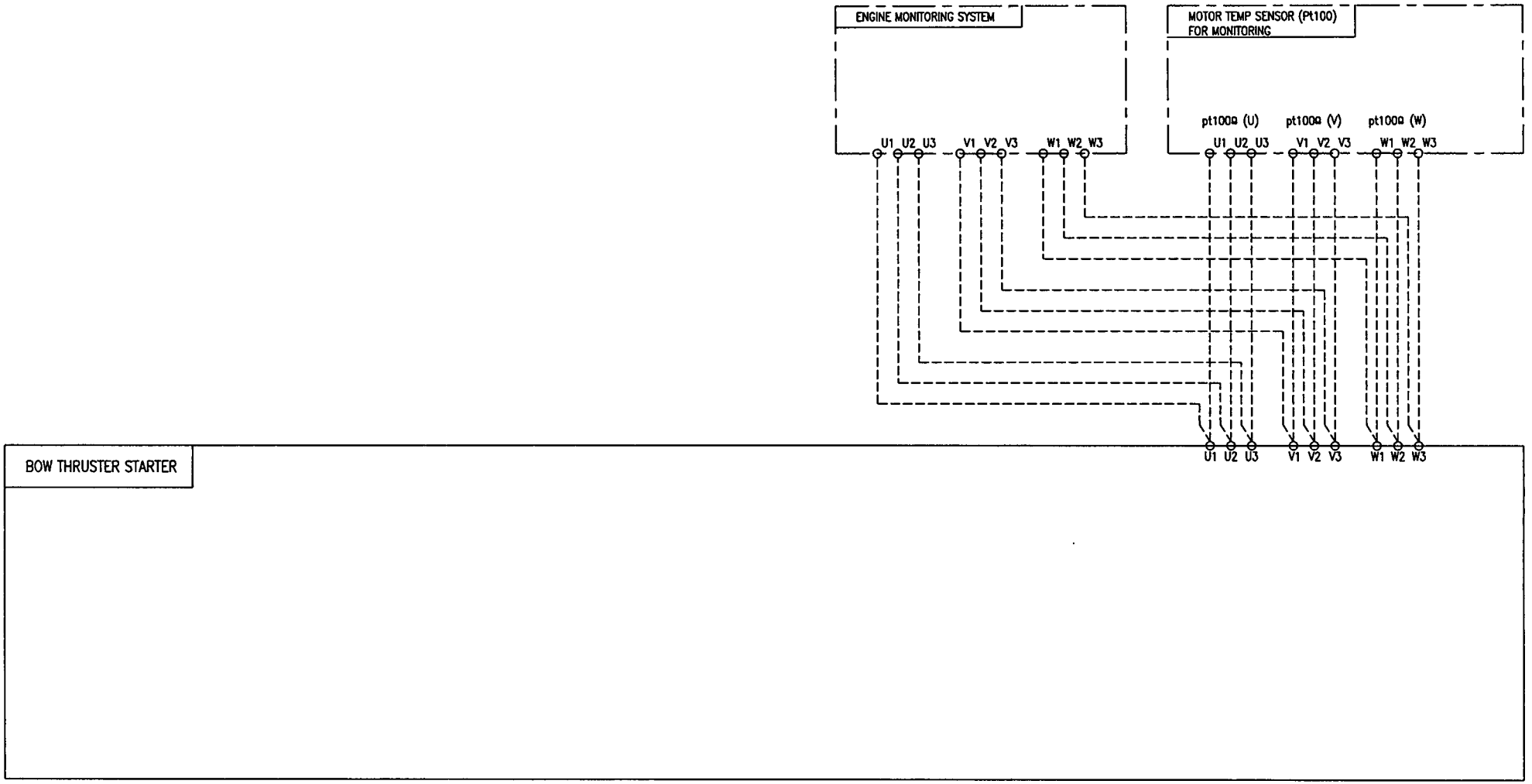

unspecified cable to be SYP-0.75mm
指示無き配線は SYP-0.75mmとする事。

CUST. : HHI 1630~	IP :		kW	1	TAIYO ELECTRIC CO., LTD.	TITLE	DRAW.NO.		SHEET NO.
COLOR:	MASS :	BOW THRUSTER STARTER				CONNECTION DIAG.	G3-15334-1	M16	M16

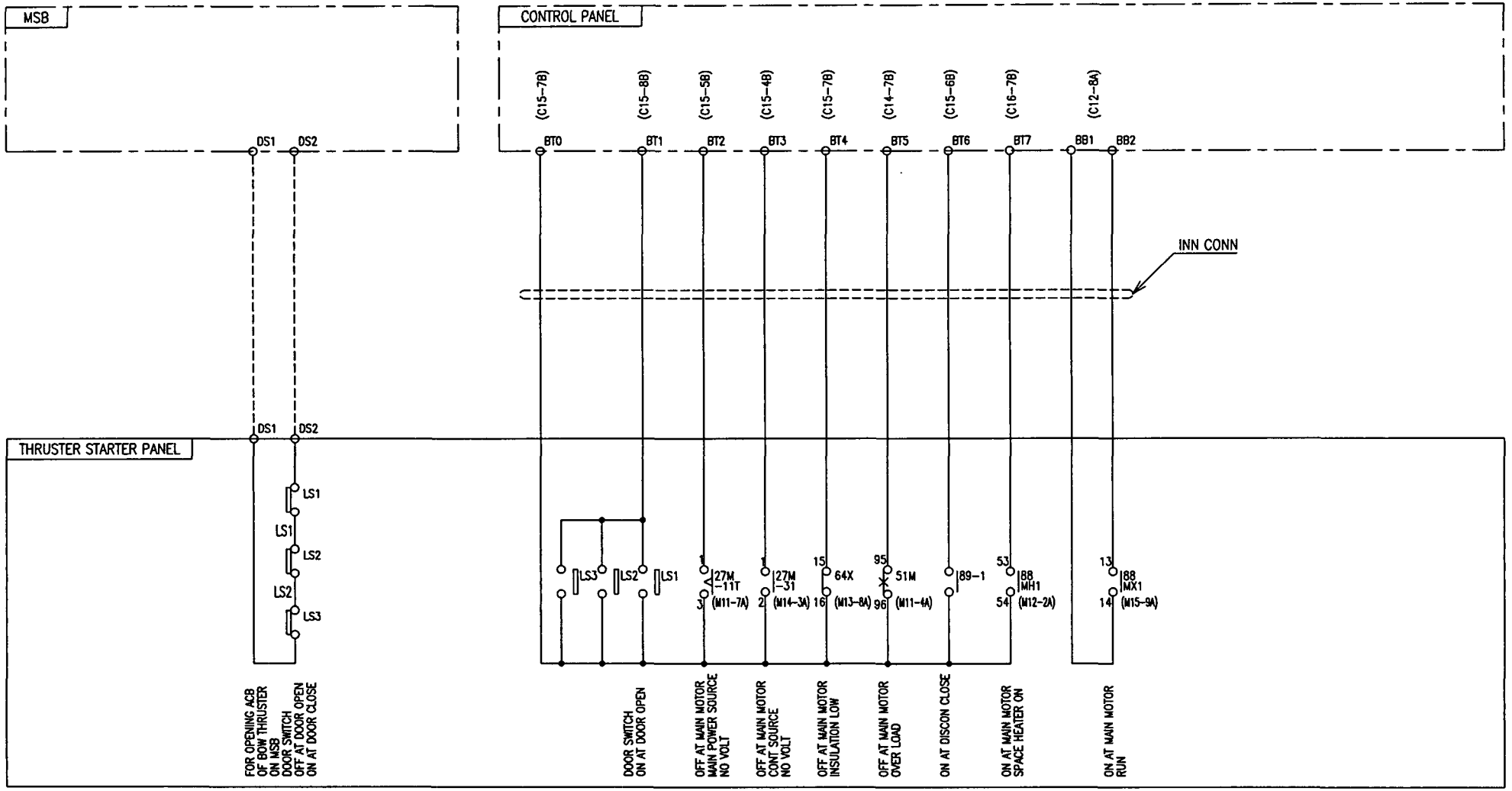

unspecified cable to be SYP-0.75mm
指示無き配線は SYP-0.75mmとする事。

CUST. : HHI 1630~	IP		kW 1	TAIYO ELECTRIC CO., LTD. 2 1	TITLE	DRAW.NO.		SHEET NO.
COLOR:	MASS :	BOW THRUSTER STARTER			CONNECTION DIAG.	G3-15334-1	M17	M17

06_M17

EXPLANATION

(*1) START INTERLOCK ALARM (with ALARM)

: This is necessary condition for only starting main motor and when it becomes abnormal, the alarm happens.
: In case it becomes abnormal during main motor running, main motor doesn't stop but the alarm happens.

(*2) START INTERLOCK CONDITION (without ALARM)

: This is necessary condition for only starting main motor and when it doesn't fulfill a conditon, but no alarm happens.
: In case it becomes to not fulfill a condition during main motor running, main motor doesn't stop also no alarm happens.

(*3) Inhibited when hyd pump is stopped, and be monitored after hyd pump running with build up delay time.
The build up & chattering delay time are adjustable.

(*4) RUNNING INTERLOCK ALARM (with ALARM)

: This is necessary condition for starting & running main motor and when it becomes abnormal, the alarm happens.
: In case it becomes abnormal during main motor running, main motor stop and the alarm happens.

(*5) RUNNING INTERLOCK CONDITION (without ALARM)

: This is necessary condition for starting & running main motor and when it becomes not to fulfill a conditon, but no alarm happens.
Only trip alarm happens.

: In case it becomes to not fulfill a condition during main motor running, main motor stop but no alarm happens.
Only trip alarm happens.

kW		CONTROL PANEL for BOW THRUSTER		2
CUST HHI 1630~		COLOR	IP	MASS

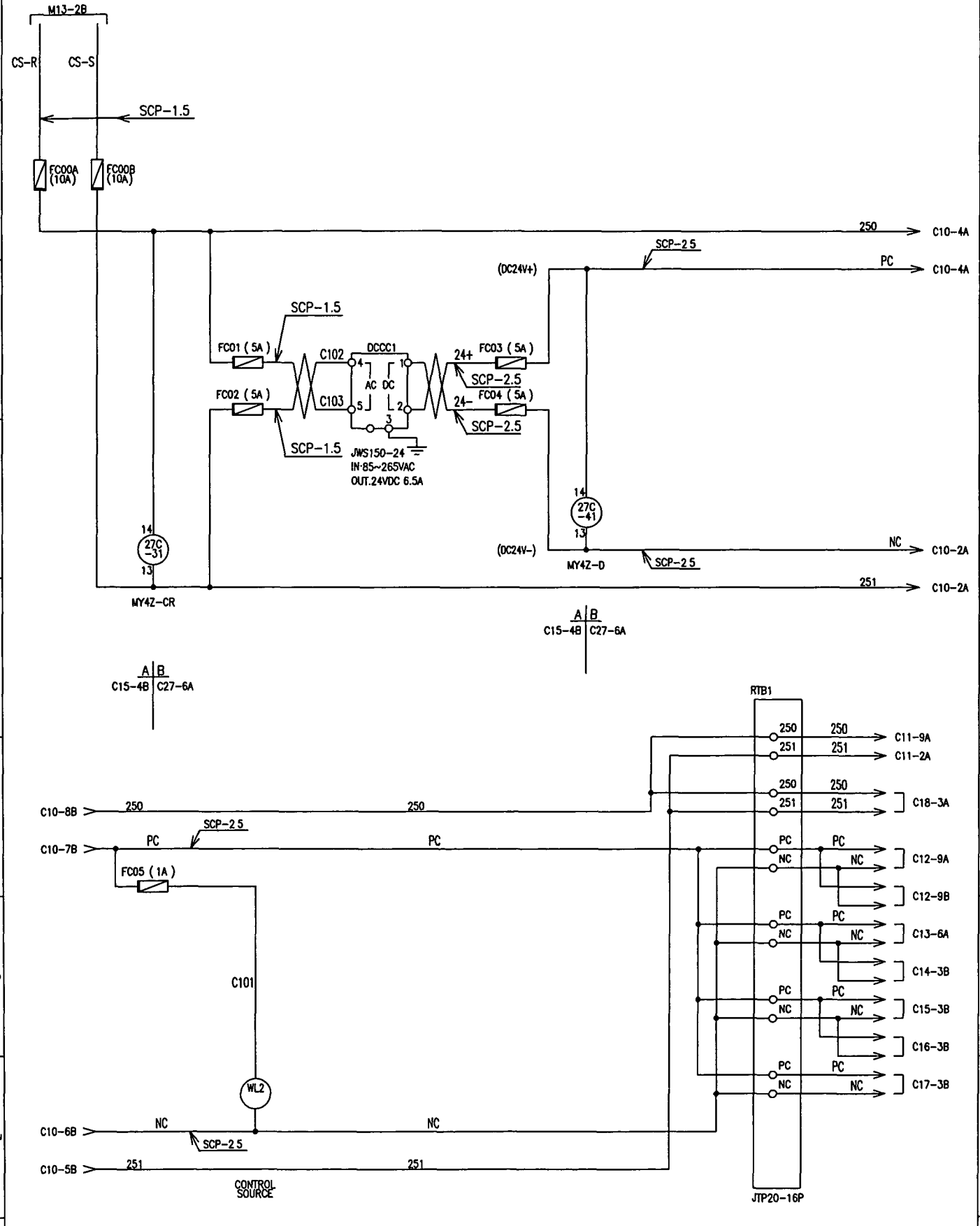

unspecified cable to be SYP-0.75mm

TAIYO ELECTRIC CO., LTD.	TITLE	DRAW.NO.		SHEET NO.
2 1	CONNECTION DIAG.	G3-15334-2		C10

C10

¥¥SCAD2¥SCAD¥ZUMEN¥船用¥物件図面¥川崎重工業¥THRUSTER¥☆川重神戸／現代_H1630ツーズ¥001¥B_W¥07_C10_N.DWG, 2005/10/13 10:17:31, TG121

kW		CONTROL PANEL for BOW THRUSTER	2
CUST HHI 1630~	COLOR	IP	MASS

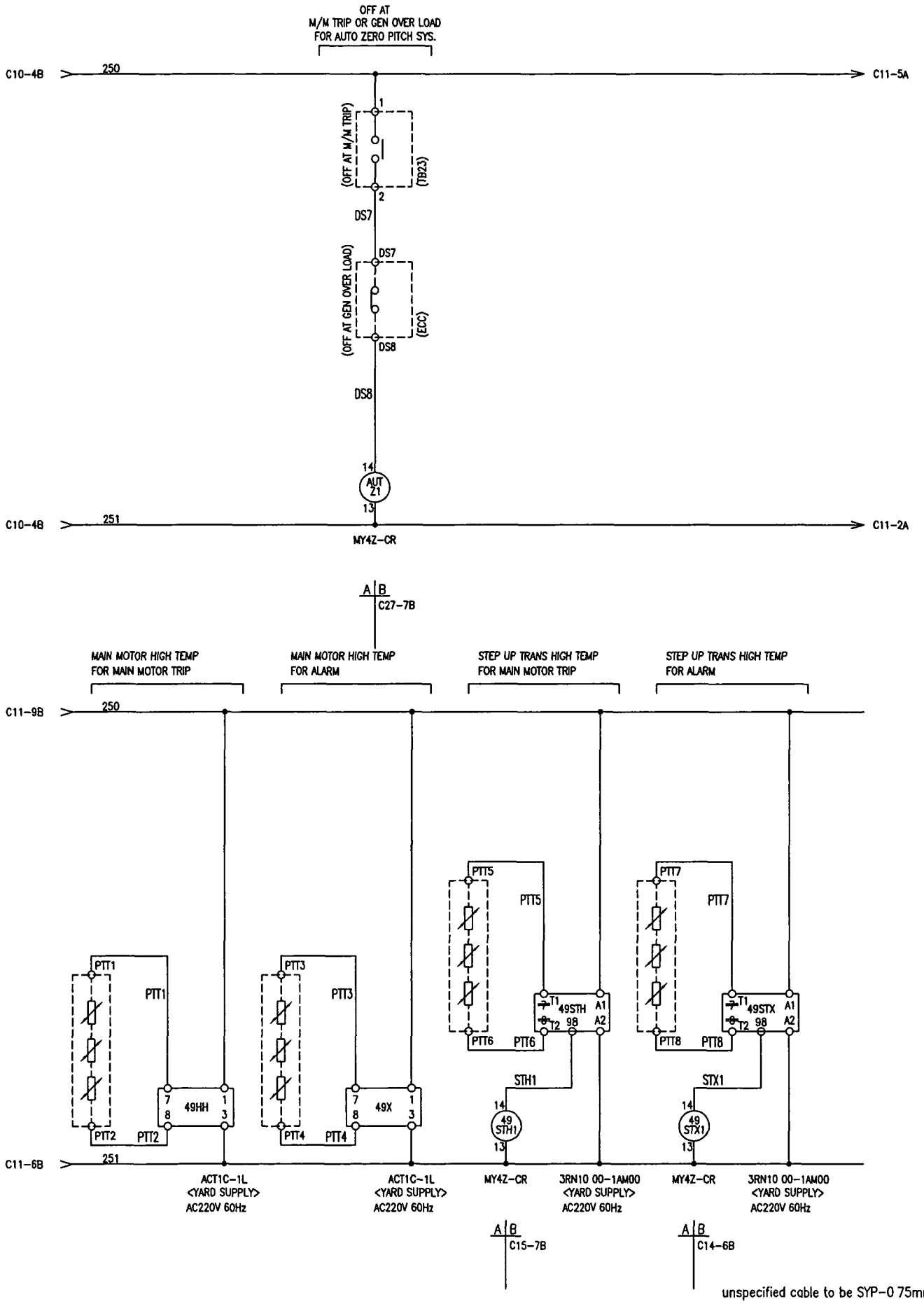

TAIYO ELECTRIC CO., LTD.	TITLE	DRAW.NO.	SHEET NO.
2 1	CONNECTION DIAG.	G3-15334-2	C11

*SCAD2*SCAD*ZUMEN*船用*物件図面*川崎重工業*THRUSTER*☆_川重神戸／現代_H1630シリーズ*001*[illegible]*07_C11_N.DWG, 2005/10/13 10:17.34, TG121
07_C11_N

kW		CONTROL PANEL for BOW THRUSTER	2
CUST : HHI 1630~	COLOR:	IP:	MASS :

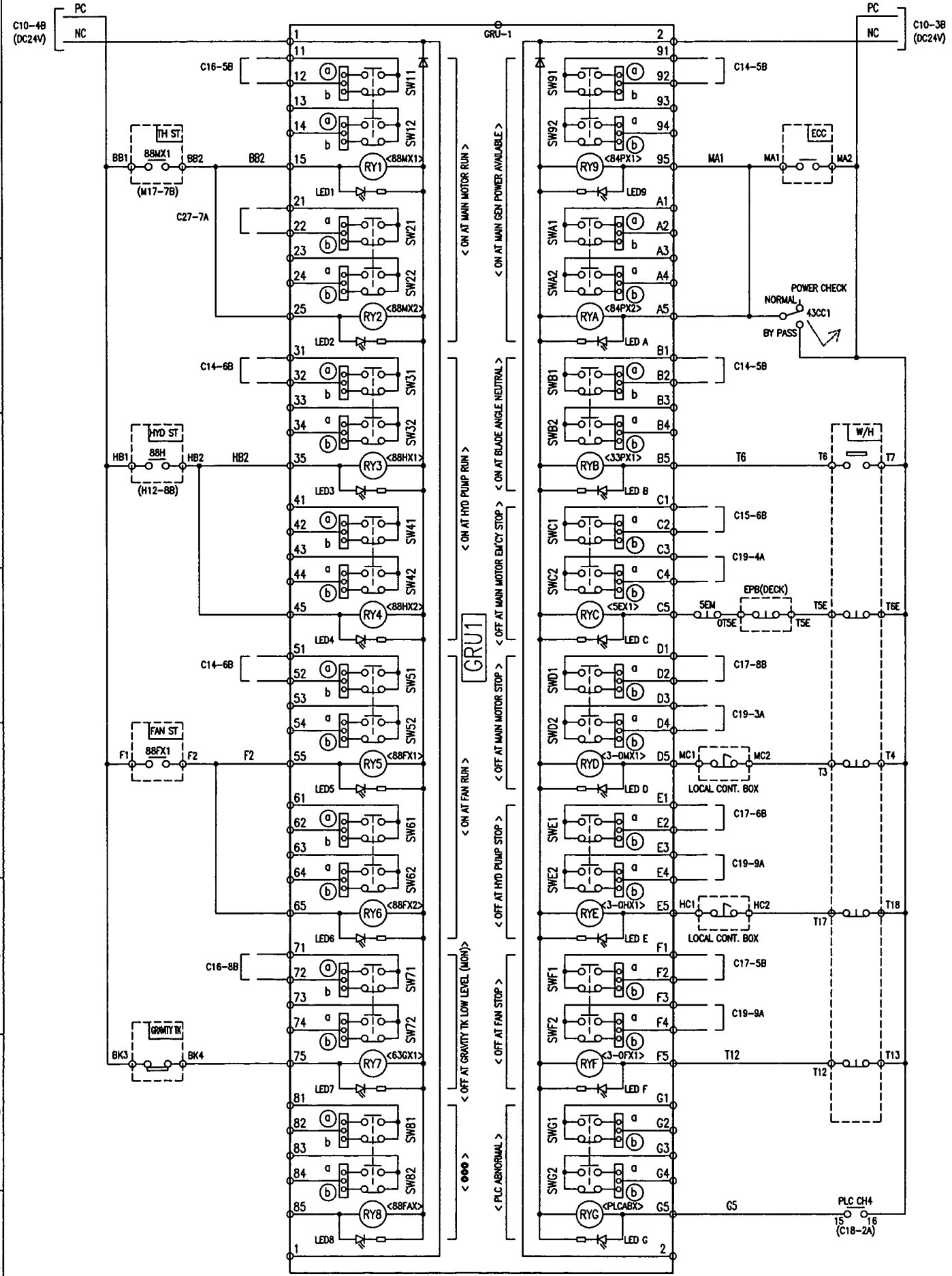

TAIYO ELECTRIC CO., LTD.	TITLE	DRAW.NO.	SHEET NO.
6 5 4 3 2 1	[GRU16D (AA-267)] CONNECTION DIAG.	G3-15334-2	C12

*SCAD2*SCAD*ZUMEN*舶用*物件図面*川崎重工業*THRUSTER*☆_川重神戸／現代_H1630シリーズ*001*B 07_C12_N.DWG, 2005/10/13 10:18:52, TG121

kW		CONTROL PANEL for BOW THRUSTER	2
CUST : HHI 1630~	COLOR:	IP :	MASS :

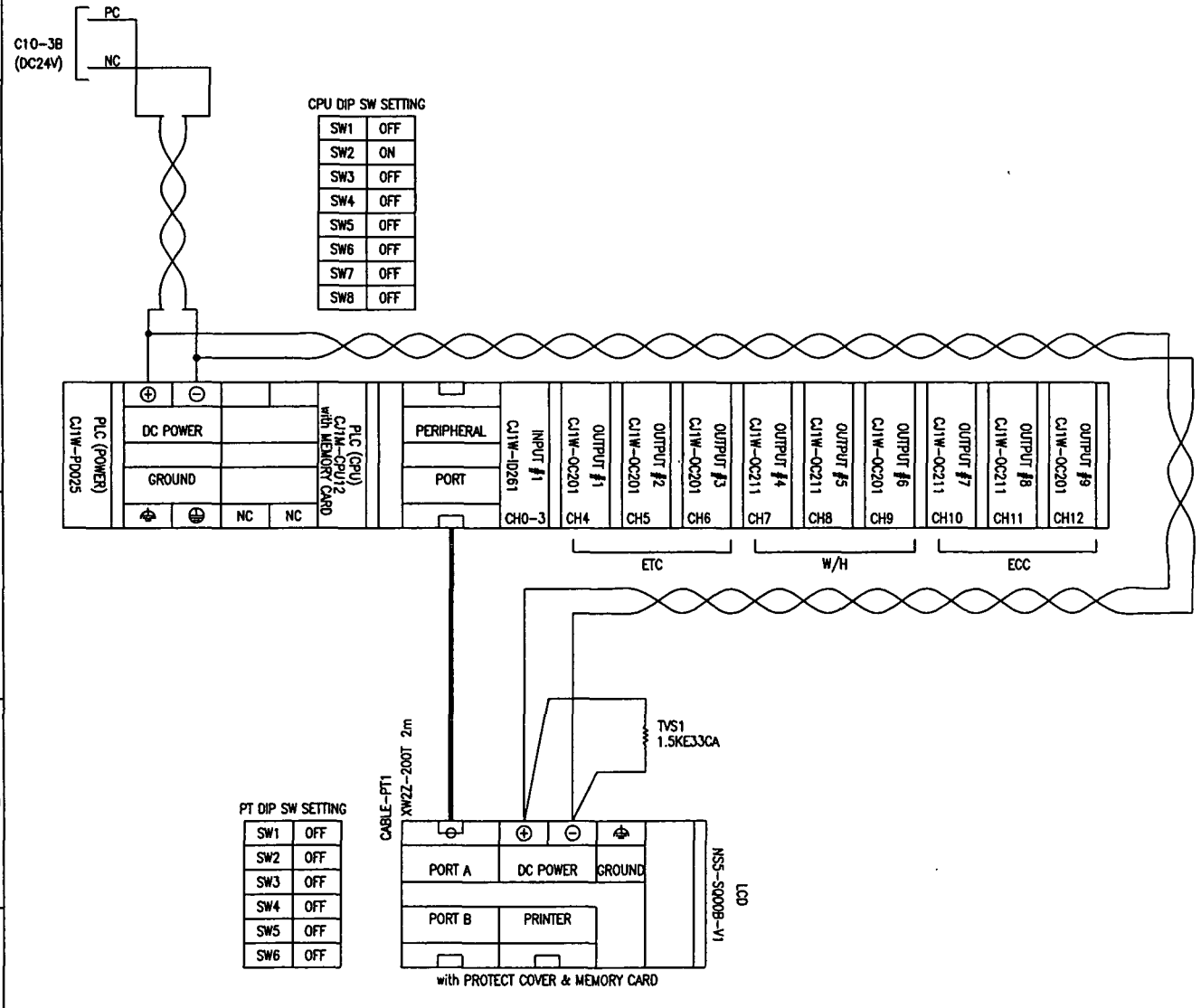

unspecified cable to be SCP-2.5mm

TAIYO ELECTRIC CO., LTD.	TITLE	DRAW.NO.	SHEET NO.
	CONNECTION DIAG.	G3-15334-2	C13

07_C13_N

kW	CONTROL PANEL for BOW THRUSTER	2
CUST : HHI 1630~	COLOR:	IP: MASS :

CH0 TB1

IN CH	NAME	KIND OF SIGNAL	I/O	DELAY TIME / SPAN	REMARK	TB NO.
						NC
						V
						G
0000	GRAVITY TANK LOW LEVEL (CONTROL)	START INTERLOCK ALARM (with ALARM) (*1)	N/C	5sec / 0~99sec		0 V G
0001	HYD OIL PUMP LOW PRESS (CONTROL)	Ditto	N/C	3sec / 0~99sec	FIXED IN CH (*3)	1 V G
0002	HYD OIL PUMP OVER LOAD	Ditto	N/C	0sec / 0~99sec		2 V G
0003	FAN FAIL	Ditto	N/C	0sec / 0~99sec		3 V G
0004	MAIN MOTOR OVER LOAD	Ditto	N/C	0sec / 0~99sec		4 V G
0005	MAIN MOTOR HIGH TEMP (ALARM)	Ditto	N/C	0sec / 0~99sec		5 V G
0006	STEP UP Tr HIGH TEMP (ALARM)	Ditto	N/C	0sec / 0~99sec		6 V G
0007	----- -----	Ditto	N/O	0sec / 0~99sec		7 V G
0008	HYD OIL PUMP RUN	START INTERLOCK CONDITION (without ALARM) (*2)	N/O	0sec / 0~99sec	FIXED IN CH	8 V G
0009	FAN RUN	Ditto	N/O	0sec / 0~99sec	FIXED IN CH	9 V G
0010	BLADE ANGLE NEUTRAL	Ditto	N/O	0sec / 0~99sec		10 V G
0011	MAIN GEN POWER AVAIL	Ditto	N/O	0sec / 0~99sec	FIXED IN CH	11 V G
0012	SPARE -----	Ditto	N/C	0sec / 0~99sec		12 V G
0013	SPARE -----	Ditto	N/C	0sec / 0~99sec		13 V G
0014	SPARE -----	Ditto	N/C	0sec / 0~99sec		14 V G
0015	SPARE -----	Ditto	N/C	0sec / 0~99sec		15 V G
	TB1 XW2F-20G7-IN16					NC V G

HT1 / HT0 / BT5

C141 49X 4 (C11-2B) 6
C142 49STX1 9 (C11-2B) 1
C144 88HX1 (GRU1) 31 32
C145 88FX1 (GRU1) 51 52
C146 33PX1 (GRU1) B1 B2
C147 84PX1 (GRU1) 91 92
C148

PC / NC → C10-3B (DC24V)

TB NO.	SIGNAL	LOCATION
BK1		GRAVITY TANK
BK2		
B1		HYD UNIT
H1		
HT1	51H (H12-7B)	HYD P'P STARTER
HT0		
·		FAN STARTER
·		
BT5	51M (N17-6B)	THRUSTER STARTER
·		
·		
·		
·		
·		
·		SHEET NO. "C12"
·		
·		SHEET NO. "C12"
·		
·		SHEET NO. "C12"
·		
·		SHEET NO. "C12"
·		
·		
·		
·		
·		
·		
·		
·		
·		

CABLE-I-01 XW2Z-300D 3m

TO TB2 (C15-2A)

ETC / W/H / ECC

POWER UNIT | CPU UNIT | INPUT UNIT #1 | OUTPUT UNIT #1 | OUTPUT UNIT #2 | OUTPUT UNIT #3 | OUTPUT UNIT #4 | OUTPUT UNIT #5 | OUTPUT UNIT #6 | OUTPUT UNIT #7 | OUTPUT UNIT #8 | OUTPUT UNIT #9

REFER TO SHEET NO. "EXP01" ABOUT "(*1)", "(*2)", "(*3)"

unspecified cable to be SYP-0.75mm
指示無き配線は SYP-0.75mmとする事。

TAIYO ELECTRIC CO., LTD.	TITLE	DRAW.NO.	SHEET NO.
5 4 3 2 1	CONNECTION DIAG.	G3-15334-2	C14

07_C14_N

kW		CONTROL PANEL for BOW THRUSTER	2
CUST : HHI 1630~	COLOR:	IP:	MASS :

CH1 **TB2**

IN CH	NAME	KIND OF SIGNAL	I/O	DELAY TIME / SPAN	REMARK	TB NO.
						NC
						V
						G
0100	DOOR OPEN -----	RUNNING INTERLOCK ALARM (with ALARM) (*4)	N/O	0sec / 0~99sec		0
						V
						G
0101	MAIN MOTOR EM'CY STOP COMMAND	Ditto	N/O	0sec / 0~99sec		1
						V
						G
0102	MAIN MOTOR HIGH TEMP (TRIP)	Ditto	N/C	0sec / 0~99sec		2
						V
						G
0103	STEP UP Tr HIGH TEMP (TRIP)	Ditto	N/C	0sec / 0~99sec		3
						V
						G
0104	MAIN MOTOR INSULATION LOW	Ditto	N/C	0sec / 0~99sec		4
						V
						G
0105	SPARE ----	Ditto	N/O	0sec / 0~99sec		5
						V
						G
0106	SPARE ----	Ditto	N/O	0sec / 0~99sec		6
						V
						G
0107	SPARE ----	Ditto	N/O	0sec / 0~99sec		7
						V
						G
0108	DISCON CLOSE	RUNNING INTERLOCK CONDITION (without ALARM) (*5)	N/O	0sec / 0~99sec	FIXED IN CH	8
						V
						G
0109	SPARE ----	Ditto	N/C	0sec / 0~99sec		9
						V
						G
0110	POWER SOURCE (AC3300V)	Ditto	N/O	0sec / 0~99sec		10
						V
						G
0111	POWER SOURCE (AC440V)	Ditto	N/O	0sec / 0~99sec		11
						V
						G
0112	MAIN MOTOR CONT SOURCE	Ditto	N/O	0sec / 0~99sec		12
						V
						G
0113	CONT PANEL CONT SOURCE (AC)	Ditto	N/O	0sec / 0~99sec		13
						V
						G
0114	CONT PANEL CONT SOURCE (DC)	Ditto	N/O	0sec / 0~99sec		14
						V
						G
0115	STABILIZER SYSTEM ON	Ditto	N/C	0sec / 0~99sec		15
						V
						G
	TB2 XW2F-20G7-IN16					NC
						V
						G

CABLE-I-01 (C14-2A)

BT1 — C151 5EX1 (GRU1) C1 C2

C152 49HH 4 (C11-2B) 6

C0152 49STH1 9 (C11-2B) 1

BT4

BT0

BT6

BT2

HT2

BT3

C153 27C-31 9 (C10-6A) 5

C154 27C-41 9 (C10-6B) 5

C155

PC / NC — C10-3B (DC24V)

TB NO.	SIGNAL	LOCATION
BT1	LS (M17-4B)	THRUSTER STARTER
·		SHEET NO. "C12"
·		
·		
·		
·		
BT4	64X (M17-5B)	THRUSTER STARTER
BT0		
·		
·		
·		
·		
·		
·		
BT6	89 (M17-6B)	THRUSTER STARTER
·		
·		
·		
BT2	27M-111 (M17-5B)	THRUSTER STARTER
·		
HT2	27H-11 (H12-6B)	HYD P'P STARTER
·		
BT3	27M-31 (M17-5B)	THRUSTER STARTER
·		
·		
·		
·		
·		STABILIZER SYSTEM
·		

REFER TO SHEET NO. "EXP01" ABOUT "(*4)", "(*5)"

unspecified cable to be SYP-0.75mm
指示無き配線は SYP-0.75mmとする事。

TAIYO ELECTRIC CO., LTD.	TITLE	DRAW.NO.	SHEET NO.
4 3 2 1	CONNECTION DIAG.	G3-15334-2	C15

C15

**SCAD2*SCAD*ZUMEN*船用*物件図面*川崎重工業*THRUSTER*☆_川重神戸／現代_H1630シリーズ*001*P_*07_C15_N.DWG, 2005/10/13 10:19:34, TG121

kW	CONTROL PANEL for BOW THRUSTER	2
CUST : HHI 1630~	COLOR:	IP: MASS :

CH2 **TB3**

TB NO.

IN CH	NAME	KIND OF SIGNAL	I/O	DELAY TIME / SPAN	REMARK	TB NO.
						NC
						V
						G
0200	GRAVITY TANK LOW LEVEL (MONITORING)	OTHERS (INDICATION ONLY)	N/C	5sec / 0~99sec	FIXED IN CH	0 V G
0201	HYD OIL PUMP LOW PRESS (MONITORING)	Ditto	N/C	3sec / 0~99sec	FIXED IN CH (*3)	1 V G
0202	SPARE ----	OTHERS	N/O	0sec / 0~99sec		2 V G
0203	MAIN MOTOR SPACE HEATER ON	OTHERS (INDICATION ONLY)	N/O	0sec / 0~99sec	FIXED IN CH	3 V G
0204	SPARE ----	OTHERS	N/O	0sec / 0~99sec		4 V G
0205	SPARE ----	Ditto	N/O	0sec / 0~99sec		5 V G
0206	SPARE ----	Ditto	N/O	0sec / 0~99sec		6 V G
0207	MAIN MOTOR RUN	Ditto	N/O	0sec / 0~99sec	FIXED IN CH	7 V G
0208	SPARE ----	Ditto	N/O	0sec / 0~99sec		8 V G
0209	SPARE ----	Ditto	N/O	0sec / 0~99sec		9 V G
0210	SPARE ----	Ditto	N/O	0sec / 0~99sec		10 V G
0211	SPARE ----	Ditto	N/O	0sec / 0~99sec		11 V G
0212	SPARE ----	Ditto	N/O	0sec / 0~99sec		12 V G
0213	SPARE ----	Ditto	N/O	0sec / 0~99sec		13 V G
0214	SPARE ----	Ditto	N/O	0sec / 0~99sec		14 V G
0215	SPARE ----	Ditto	N/O	0sec / 0~99sec		15 V G
						NC V G

TB3 XW2F-20G7-IN16

CABLE-I-02 XW2Z-300D 3m

TO TB4 (C17-2A)

ETC | W/H | ECC

POWER UNIT | CPU UNIT | INPUT UNIT #1 | OUTPUT UNIT #1 | OUTPUT UNIT #2 | OUTPUT UNIT #3 | OUTPUT UNIT #4 | OUTPUT UNIT #5 | OUTPUT UNIT #6 | OUTPUT UNIT #7 | OUTPUT UNIT #8 | OUTPUT UNIT #9

63GX1 (GRU1) C161 71 72 C162

BT7

88MX1 (GRU1) C163 11 12 C164

PC NC C10-3B (DC24V)

TB NO.	SIGNAL	LOCATION
·		SHEET NO. "C12"
·		
B2		HYD UNIT
H2		
BT7	88MH1 (M17-7B)	THRUSTER STARTER
·		
·		
·		
·		
·		
·		
·		SHEET NO. "C12"
·		
·		
·		
·		
·		
·		
·		
·		
·		
·		
·		
·		
·		

REFER TO SHEET NO. "EXP01" ABOUT "(*3)"

unspecified cable to be SYP-0.75mm
指示無き配線は SYP-0.75mmとする事。

07_C16_N

TAIYO ELECTRIC CO., LTD.	TITLE	DRAW.NO.	SHEET NO.
4 3 2 1	CONNECTION DIAG.	G3-15334-2	C16

kW		CONTROL PANEL for BOW THRUSTER	2
CUST : HHI 1630~	COLOR:	IP:	MASS :

CH3 TB4

IN CH	NAME	KIND OF SIGNAL	I/O	DELAY TIME / SPAN	REMARK	TB NO.
						NC
						V
						G
0300	MAIN MOTOR START COMMAND (REMOTE)	OTHERS	N/O	0sec / 0~99sec	FIXED IN CH	0 V G
0301	MAIN MOTOR START COMMAND (LOCAL)	Ditto	N/O	0sec / 0~99sec	FIXED IN CH	1 V G
0302	MAIN MOTOR STOP COMMAND	Ditto	N/O	0sec / 0~99sec	FIXED IN CH	2 V G
0303	MAIN MOTOR START REQUEST (LOCAL)	Ditto	N/O	0sec / 0~99sec	FIXED IN CH	3 V G
0304	MAIN MOTOR START REQUEST (REMOTE)	Ditto	N/O	0sec / 0~99sec	FIXED IN CH	4 V G
0305	HYD OIL PUMP START COMMAND (REMOTE)	Ditto	N/O	0sec / 0~99sec	FIXED IN CH	5 V G
0306	HYD OIL PUMP START COMMAND (LOCAL)	Ditto	N/O	0sec / 0~99sec	FIXED IN CH	6 V G
0307	HYD OIL PUMP STOP COMMAND	Ditto	N/O	0sec / 0~99sec	FIXED IN CH	7 V G
0308	BOW TH RM FAN START COMMAND (ALL)	Ditto	N/O	0sec / 0~99sec	FIXED IN CH	8 V G
0309	BOW TH RM FAN STOP COMMAND	Ditto	N/O	0sec / 0~99sec	FIXED IN CH	9 V G
0310	MAIN MOTOR START COMMAND (LCB)	Ditto	N/O	0sec / 0~99sec	FIXED IN CH	10 V G
0311	HYD OIL PUMP START COMMAND (LCB)	Ditto	N/O	0sec / 0~99sec	FIXED IN CH	11 V G
0312	MAIN MOTOR START REQUEST (LCB)	Ditto	N/O	0sec / 0~99sec	FIXED IN CH	12 V G
0313	SPARE ----	Ditto	N/O	0sec / 0~99sec		13 V G
0314	SPARE ----	Ditto	N/O	0sec / 0~99sec		14 V G
0315	SPARE ----	Ditto	N/O	0sec / 0~99sec		15 V G
						NC V G

TB4 XW2F-20G7-IN16

CABLE-I-02 (C16-2A)

C171 3-0MX1 (GRU1) D1 D2

C172 3-0HX1 (GRU1) E1 E2

C173 3-0FX1 (GRU1) F1 F2

C174

PC / NC → C10-2B (DC24V)

TB NO.	SIGNAL	LOCATION
1		W/H
2		
·		
·		
·		SHEET NO. "C12"
·		
·		
·		
8		W/H
9		
15		W/H
16		
·		
·		
·		SHEET NO. "C12"
·		
10		W/H
11		
·		SHEET NO. "C12"
·		
MC3		LCB
MC4		
HC3		LCB
HC4		
MR1		LCB
MR2		
·		
·		
·		
·		
·		
·		

unspecified cable to be SYP-0.75mm
指示無き配線は SYP-0.75mmとする事。

TAIYO ELECTRIC CO., LTD.	TITLE	DRAW.NO.	SHEET NO.
2 1	CONNECTION DIAG.	G3-15334-2	C17

07_C17_N

kW		CONTROL PANEL for BOW THRUSTER	2
CUST : HHI 1630~	COLOR:	IP:	MASS :

OUTPUT #1 (CH4)

SHORT BAR

OUT CH	NAME	CONTACT	TERMINAL NO		
0400	ON AT POWER AVAIL D/G PARA RUN or START GRANTED	1A/250VAC 1A/24VDC	0	B0	1
			C0	A0	2
0401	ON AT READY TO START	1A/250VAC 1A/24VDC	1	B1	3
			C1	A1	4
0402	ON AT MAIN MOTOR RUN	1A/250VAC 1A/24VDC	2	B2	5
			C2	A2	6
0403	ON AT HYD OIL PUMP RUN	1A/250VAC 1A/24VDC	3	B3	7
			C3	A3	8
0404		1A/250VAC 1A/24VDC	4	B4	9
			C4	A4	10
0405	ON AT MAIN MOTOR RUN	1A/250VAC 1A/24VDC	5	B5	11
			C5	A5	12
0406	ON AT MAIN MOTOR START REQUEST	1A/250VAC 1A/24VDC	6	B6	13
			C6	A6	14
0407	OFF AT PLC ABNORMAL	1A/250VAC 1A/24VDC	7	B7	15
			C7	A7	16
			NC	B8	17
			NC	A8	

TB21

TB NO
1
2
3
4
5
6
7
8
9
10
11
12
13
14
15
16
17
18
19
20

TB21
AA-325

TB NO.	LOCATION
LCT	LCB
LC1	L
·	LCB
·	L
·	LCB
LC3	L
·	LCB
LC4	L
·	
·	
·	ECC
·	
·	ECC
·	
·	
·	

C10-4B
(AC220V)
250
FC81 (3A)
0250
251

C12-1B
G5
PC

ETC W/H ECC

POWER UNIT	CPU UNIT	INPUT UNIT #1	OUTPUT UNIT #1	OUTPUT UNIT #2	OUTPUT UNIT #3	OUTPUT UNIT #4	OUTPUT UNIT #5	OUTPUT UNIT #6	OUTPUT UNIT #7	OUTPUT UNIT #8	OUTPUT UNIT #9

unspecified cable to be SYP-0.75mm
指示無き配線は SYP-0.75mmとする事。

TAIYO ELECTRIC CO., LTD.	TITLE	DRAW.NO.	SHEET NO.
4 3 2 1	CONNECTION DIAG.	G3-15334-2	C18

¥¥SCAD2¥SCAD¥ZUMEN¥船用¥物件図面¥川崎重工業¥THRUSTER¥☆_川重神戸／現代_H1630シリーズ¥001¥EB_07_C18_N.DWG, 2005/10/13 10:20:08, TG121

kW		CONTROL PANEL for BOW THRUSTER	2
CUST . HHI 1630~	COLOR.	IP.	MASS

OUTPUT #2 (CH5)

OUT CH	NAME	CONTACT	TERMINAL NO	
0500	ON AT BOW TH RM FAN STOP ORDER (MOMENTARY)	1A/250VAC 1A/24VDC	0	B0
			C0	A0
0501	ON AT BOW TH RM FAN START ORDER (MOMENTARY)	1A/250VAC 1A/24VDC	1	B1
			C1	A1
0502	ON AT HYD OIL PUMP STOP ORDER (MOMENTARY)	1A/250VAC 1A/24VDC	2	B2
			C2	A2
0503	ON AT HYD OIL PUMP START ORDER (MOMENTARY)	1A/250VAC 1A/24VDC	3	B3
			C3	A3
0504	ON AT MAIN MOTOR STOP ORDER (MOMENTARY)	1A/250VAC 1A/24VDC	4	B4
			C4	A4
0505	ON AT MAIN MOTOR START ORDER (MOMENTARY)	1A/250VAC 1A/24VDC	5	B5
			C5	A5
0506		1A/250VAC 1A/24VDC	6	B6
			C6	A6
0507		1A/250VAC 1A/24VDC	7	B7
			C7	A7
			NC	B8
			NC	A8

3-0HX1 (GRU1) E3 E4 — 0502 — 0500
3-0FX1 (GRU1) F3 F4 — 0500C
0502C
0504
0504C
5EX1 (GRU1) C3 C4
3-0MX1 (GRU1) D3 D4

TB22

TB NO		TB NO.	LOCATION
1		·	BOW TH RM FAN ST
2		CPF1	
3		CPF2	BOW TH RM FAN ST
4		CPF3	
5		·	HYD OIL PUMP ST (H11-4A)
6	C1	CPH1	
7	CPH2	CPH2	HYD OIL PUMP ST (H11-4A)
8	C3	CPH3	
9		·	BOW TH ST -----
10	CP1	CP1	
11	CP2	CP2	BOW TH ST -----
12	CP3	CP3	
13		·	
14		·	
15		·	
16		·	
17			
18			
19			
20			

TB22
AA-325

ETC W/H ECC

POWER UNIT	CPU UNIT	INPUT UNIT #1	OUTPUT UNIT #1	OUTPUT UNIT #2	OUTPUT UNIT #3	OUTPUT UNIT #4	OUTPUT UNIT #5	OUTPUT UNIT #6	OUTPUT UNIT #7	OUTPUT UNIT #8	OUTPUT UNIT #9

unspecified cable to be SYP-0.75mm
指示無き配線は SYP-0.75mmとする事.

TAIYO ELECTRIC CO., LTD.	TITLE	DRAW.NO.	SHEET NO.
2 1	CONNECTION DIAG.	G3-15334-2	C19

**SCAD2*SCAD*ZUMEN*舶用*物件図面*川崎重工業*THRUSTER*☆_川重神戸／現代_H1630シリーズ*K001*B_07_C19_N.DWG, 2005/10/13 10:20:10, TG121
N_61C_7_0

kW		CONTROL PANEL for BOW THRUSTER	2
CUST HHI 1630~	COLOR	IP	MASS

OUTPUT #3 (CH6)

OUT CH	NAME	CONTACT	TERMINAL NO		
0600	OFF AT MAIN MOTOR TRIP ALARM FOR AUTO ZERO PITCH SYTEM	1A/250VAC 1A/24VDC	0	B0	1
			C0	A0	2
0601	ON AT MAIN MOTOR RUN FOR VDR	1A/250VAC 1A/24VDC	1	B1	3
			C1	A1	4
0602	OFF AT COMMON ALARM FOR VDR	1A/250VAC 1A/24VDC	2	B2	5
			C2	A2	6
0603	OFF AT TOO MANY START ALARM	1A/250VAC 1A/24VDC	3	B3	7
			C3	A3	8
0604		1A/250VAC 1A/24VDC	4	B4	9
			C4	A4	10
0605		1A/250VAC 1A/24VDC	5	B5	11
			C5	A5	12
0606		1A/250VAC 1A/24VDC	6	B6	13
			C6	A6	14
0607		1A/250VAC 1A/24VDC	7	B7	15
			C7	A7	16
			NC	B8	17
			NC	A8	

TB23

TB NO			TB NO.	LOCATION
1	250	C11-8A	·	
2	DS7		·	
3			VD1	W/H (VDR)
4			VD2	
5			·	
6			·	
7			·	
8			·	
9			·	
10			·	
11			·	
12			·	
13			·	
14			·	
15			·	
16			·	
17				
18				
19				
20				

TB23
AA-325

ETC W/H ECC

POWER UNIT	CPU UNIT	INPUT UNIT #1	OUTPUT UNIT #1	OUTPUT UNIT #2	OUTPUT UNIT #3	OUTPUT UNIT #4	OUTPUT UNIT #5	OUTPUT UNIT #6	OUTPUT UNIT #7	OUTPUT UNIT #8	OUTPUT UNIT #9

unspecified cable to be SYP-0.75mm
指示無き配線は SYP-0.75mmとする事.

TAIYO ELECTRIC CO., LTD.	TITLE	DRAW.NO.		SHEET NO.
2 1	CONNECTION DIAG.	G3-15334-2		C20

C20

SCAD2SCAD**ZUMEN**舶用**物件図面**川崎重工業**THRUSTER**☆_川重神戸／現代_H1630シリーズ**K001**BOW_007_C20_N.DWG, 2005/10/13 10:20:13, TG121

kW		CONTROL PANEL for BOW THRUSTER	2
CUST HHI 1630~	COLOR	IP	MASS

OUTPUT #4 (CH7)

	OUT CH	NAME	CONTACT (1A/250VAC,1A/24VDC)	TERMINAL NO		
START INTERLOCK (ALARM)	0700	OFF AT GRAVITY TANK LOW LEVEL (CONT)	(0000)	0	A0	1
	0701	OFF AT HYD OIL PUMP LOW PRESS (CONT)	(0001)	1	B0	2
	0702	OFF AT HYD OIL PUMP OVER LOAD	(0002)	2	A1	3
	0703	OFF AT FAN FAIL	(0003)	3	B1	4
	0704	OFF AT MAIN MOTOR OVER LOAD	(0004)	4	A2	5
	0705	OFF AT MAIN MOTOR HIGH TEMP (ALARM)	(0005)	5	B2	6
	0706	OFF AT STEP UP Tr HIGH TEMP (ALARM)	(0006)	6	A3	7
	0707		(0007)	7	B3	8
RUNNING INTERLOCK (ALARM)	0708	OFF AT DOOR OPEN	(0100)	8	A4	9
	0709	OFF AT MAIN MOTOR EM'CY STOP COM	(0101)	9	B4	10
	0710	OFF AT MAIN MOTOR HIGH TEMP (TRIP)	(0102)	10	A5	11
	0711	OFF AT STEP UP Tr HIGH TEMP (TRIP)	(0103)	11	B5	12
	0712	OFF AT MAIN MOTOR INSULATION LOW	(0104)	12	A6	13
	0713		(0105)	13	B6	14
	0714		(0106)	14	A7	15
	0715		(0107)	15	B7	16
				COM	A8	17
				COM	B8	

C22-4A ← COM1

TB24

TB NO	
1	
2	
3	----------
4	----------
5	----------
6	----------
7	
8	
9	
10	
11	
12	
13	----------
14	
15	
16	
17	----------
18	
19	
20	

TB24 AA-325

TB NO.	LOCATION
·	
·	
43	W/H
47	W/H
45	W/H
48	W/H
·	
·	
·	
·	
·	
·	
40	W/H
·	
·	
·	
26	W/H
·	

ETC W/H ECC

POWER UNIT	CPU UNIT	INPUT UNIT #1	OUTPUT UNIT #1	OUTPUT UNIT #2	OUTPUT UNIT #3	OUTPUT UNIT #4	OUTPUT UNIT #5	OUTPUT UNIT #6	OUTPUT UNIT #7	OUTPUT UNIT #8	OUTPUT UNIT #9

unspecified cable to be SYP-0 75mm
指示無き配線は SYP-0 75mmとする事。

07_C21_N

TAIYO ELECTRIC CO., LTD.	TITLE	DRAW NO		SHEET NO
2 1	CONNECTION DIAG	G3-15334-2		C21

C21

kW		CONTROL PANEL for BOW THRUSTER	2
CUST : HHI 1630~	COLOR :	IP :	MASS :

OUTPUT #5 (CH8)

	OUT CH	NAME	CONTACT (1A/250VAC,1A/24VDC)	TERMINAL NO		
START INTERLOCK (CONDITION)	0800	ON AT HYD OIL PUMP RUN	(0008)	0	A0	1
	0801	ON AT FAN RUN	(0009)	1	B0	2
	0802	ON AT BLADE ANGLE NEUTRAL	(0010)	2	A1	3
	0803	ON AT MAIN GEN POWER AVAIL	(0011)	3	B1	4
	0804		(0012)	4	A2	5
	0805		(0013)	5	B2	6
	0806		(0014)	6	A3	7
	0807		(0015)	7	B3	8
RUNNING INTERLOCK (CONDITION)	0808	ON AT DISCON CLOSE	(0108)	8	A4	9
	0809		(0109)	9	B4	10
	0810	ON AT POWER SOURCE (AC3300V)	(0110)	10	A5	11
	0811	ON AT POWER SOURCE (AC440V)	(0111)	11	B5	12
	0812	ON AT MAIN MOTOR CONT SOURCE	(0112)	12	A6	13
	0813	ON AT CONT PANEL CONT SOURCE (AC)	(0113)	13	B6	14
	0814	ON AT CONT PANEL CONT SOURCE (DC)	(0114)	14	A7	15
	0815	ON AT STABILIZER SYSTEM ON	(0115)	15	B7	16
				COM	A8	17
				COM	B8	

C21-4A > COM1

C23-4A < COM1

TB25

TB NO	
1	38 W/H
2	31 W/H
3	
4	28 W/H
5	
6	
7	
8	
9	
10	
11	27 W/H
12	34 W/H
13	
14	
15	
16	
17	
18	
19	
20	

TB25 AA-325

TB NO.	LOCATION
38	W/H
31	W/H
28	W/H
27	W/H
34	W/H

ETC W/H ECC

POWER UNIT	CPU UNIT	INPUT UNIT #1	OUTPUT UNIT #1	OUTPUT UNIT #2	OUTPUT UNIT #3	OUTPUT UNIT #4	OUTPUT UNIT #5	OUTPUT UNIT #6	OUTPUT UNIT #7	OUTPUT UNIT #8	OUTPUT UNIT #9

unspecified cable to be SYP-0.75mm
指示無き配線は SYP-0.75mmとする事。

TAIYO ELECTRIC CO., LTD.	TITLE	DRAW.NO.	SHEET NO.
3 2 1	CONNECTION DIAG.	G3-15334-2	C22

07_C22_N

kW		CONTROL PANEL for BOW THRUSTER	2
CUST : HHI 1630~	COLOR:	IP:	MASS :

OUTPUT #6 (CH9)

OUT CH	NAME	CONTACT	TERMINAL NO		
0900	OFF AT GRAVITY TANK LOW LEVEL (MONITORING)	1A/250VAC 1A/24VDC (0200)	0	B0	1
			C0	A0	2
0901	OFF AT HYD OIL PUMP LOW PRESS (MONITORING)	1A/250VAC 1A/24VDC (0201)	1	B1	3
			C1	A1	4
0902	OFF AT MAIN MOTOR START FAIL	1A/250VAC 1A/24VDC	2	B2	5
			C2	A2	6
0903	OFF AT MAIN MOTOR TRIP ALARM	1A/250VAC 1A/24VDC	3	B3	7
			C3	A3	8
0904	OFF AT COMMON ALARM	1A/250VAC 1A/24VDC	4	B4	9
			C4	A4	10
0905	OFF AT PLC ABNORMAL	1A/250VAC 1A/24VDC	5	B5	11
			C5	A5	12
0906	ON AT MAIN MOTOR READY TO START	1A/250VAC 1A/24VDC	6	B6	13
			C6	A6	14
0907	ON AT MAIN MOTOR RUN	1A/250VAC 1A/24VDC (0207)	7	B7	15
			C7	A7	16
			NC	B8	17
			NC	A8	

SHORT BAR

C22-4A — COM1

TB26

TB NO	
1	
2	
3	
4	
5	
6	
7	
8	
9	
10	
11	
12	
13	
14	
15	
16	
17	
18	
19	
20	

TB26 AA-325

TB NO.		LOCATION
1	·	W/H
2	41	
3	·	W/H
4	42	
5	·	
6	·	
7	·	W/H
8	46	
9	·	W/H (NOT USE)
10	49	
11	·	
12	·	
13	·	W/H
14	29	
15	24	W/H
16	25	

ETC W/H ECC

POWER UNIT	CPU UNIT	INPUT UNIT #1	OUTPUT UNIT #1	OUTPUT UNIT #2	OUTPUT UNIT #3	OUTPUT UNIT #4	OUTPUT UNIT #5	OUTPUT UNIT #6	OUTPUT UNIT #7	OUTPUT UNIT #8	OUTPUT UNIT #9

unspecified cable to be SYP-0.75mm
指示無き記線は SYP-0.75mmとする事。

07_C23_N

TAIYO ELECTRIC CO., LTD.	TITLE	DRAW.NO.		SHEET NO.
2 1	CONNECTION DIAG.	G3-15334-2		C23

kW		CONTROL PANEL for BOW THRUSTER	2
CUST HHI 1630~	COLOR	IP	MASS

OUTPUT #7 (CH10)

	OUT CH	NAME	CONTACT (1A/250VAC,1A/24VDC)	TERMINAL NO		
START INTERLOCK (ALARM)	1000	OFF AT GRAVITY TANK LOW LEVEL (CONT)	(0000)	0	A0	1
	1001	OFF AT HYD OIL PUMP LOW PRESS (CONT)	(0001)	1	B0	2
	1002	OFF AT HYD OIL PUMP OVER LOAD	(0002)	2	A1	3
	1003	OFF AT FAN FAIL	(0003)	3	B1	4
	1004	OFF AT MAIN MOTOR OVER LOAD	(0004)	4	A2	5
	1005	OFF AT MAIN MOTOR HIGH TEMP (ALARM)	(0005)	5	B2	6
	1006	OFF AT STEP UP Tr HIGH TEMP (ALARM)	(0006)	6	A3	7
	1007		(0007)	7	B3	8
RUNNING INTERLOCK (ALARM)	1008	OFF AT DOOR OPEN	(0100)	8	A4	9
	1009	OFF AT MAIN MOTOR EM'CY STOP COM	(0101)	9	B4	10
	1010	OFF AT MAIN MOTOR HIGH TEMP (TRIP)	(0102)	10	A5	11
	1011	OFF AT STEP UP Tr HIGH TEMP (TRIP)	(0103)	11	B5	12
	1012	OFF AT MAIN MOTOR INSULATION LOW	(0104)	12	A6	13
	1013		(0105)	13	B6	14
	1014		(0106)	14	A7	15
	1015		(0107)	15	B7	16
				COM	A8	17
				COM	B8	

C25-4A ← COM2

TB27

TB NO
1
2
3
4
5
6
7
8
9
10
11
12
13
14
15
16
17
18
19
20

TB27 AA-325

TB NO.	LOCATION
·	
·	
·	
·	
·	
·	
·	
·	
·	
·	
·	
·	
·	ECC
·	
·	
·	
JC	ECC
·	

ETC W/H ECC

POWER UNIT	CPU UNIT	INPUT UNIT #1	OUTPUT UNIT #1	OUTPUT UNIT #2	OUTPUT UNIT #3	OUTPUT UNIT #4	OUTPUT UNIT #5	OUTPUT UNIT #6	OUTPUT UNIT #7	OUTPUT UNIT #8	OUTPUT UNIT #9

unspecified cable to be SYP-0 75mm
指示無き配線は SYP-0 75mmとする事。

07_C24_N

TAIYO ELECTRIC CO., LTD.	TITLE	DRAW.NO.		SHEET NO.
1	CONNECTION DIAG.	G3-15334-2		C24

kW		CONTROL PANEL for BOW THRUSTER	2
CUST HHI 1630~	COLOR	IP	MASS

OUTPUT #8 (CH11)

	OUT CH	NAME	CONTACT (1A/250VAC,1A/24VDC)	TERMINAL NO		
START INTERLOCK (CONDITION)	1100	ON AT HYD OIL PUMP RUN	(0008)	0	A0	1
	1101	ON AT FAN RUN	(0009)	1	B0	2
	1102	ON AT BLADE ANGLE NEUTRAL	(0010)	2	A1	3
	1103	ON AT MAIN GEN POWER AVAIL	(0011)	3	B1	4
	1104		(0012)	4	A2	5
	1105		(0013)	5	B2	6
	1106		(0014)	6	A3	7
	1107		(0015)	7	B3	8
RUNNING INTERLOCK (CONDITION)	1108	ON AT DISCON CLOSE	(0108)	8	A4	9
	1109		(0109)	9	B4	10
	1110	ON AT POWER SOURCE (AC3300V)	(0110)	10	A5	11
	1111	ON AT POWER SOURCE (AC440V)	(0111)	11	B5	12
	1112	ON AT MAIN MOTOR CONT SOURCE	(0112)	12	A6	13
	1113	ON AT CONT PANEL CONT SOURCE (AC)	(0113)	13	B6	14
	1114	ON AT CONT PANEL CONT SOURCE (DC)	(0114)	14	A7	15
	1115	ON AT STABILIZER SYSTEM ON	(0115)	15	B7	16
				COM	A8	17
				COM	B8	

TB28

TB NO
1
2
3
4
5
6
7
8
9
10
11
12
13
14
15
16
17
18
19
20

TB28 AA-325

TB NO.	LOCATION
·	
·	
·	
·	
·	
·	
·	
·	
·	
·	
·	
·	
·	
·	
·	
·	

C24-4A COM2

C26-4A COM2

ETC W/H ECC

POWER UNIT	CPU UNIT	INPUT UNIT #1	OUTPUT UNIT #1	OUTPUT UNIT #2	OUTPUT UNIT #3	OUTPUT UNIT #4	OUTPUT UNIT #5	OUTPUT UNIT #6	OUTPUT UNIT #7	OUTPUT UNIT #8	OUTPUT UNIT #9

unspecified cable to be SYP-0.75mm
指示無き配線は SYP-0.75mmとする事。

TAIYO ELECTRIC CO., LTD.	TITLE	DRAW.NO.		SHEET NO.
	CONNECTION DIAG.	G3-15334-2		C25

07_C25_N

kW		CONTROL PANEL for BOW THRUSTER	2
CUST HHI 1630~	COLOR	IP	MASS

OUTPUT #9 (CH12)

OUT CH	NAME	CONTACT	TERMINAL NO	
1200	OFF AT GRAVITY TANK LOW LEVEL (MONITORING)	1A/250VAC 1A/24VDC (0200)	0	B0
			C0	A0
1201	OFF AT HYD OIL PUMP LOW PRESS (MONITORING)	1A/250VAC 1A/24VDC (0201)	1	B1
			C1	A1
1202	OFF AT MAIN MOTOR START FAIL	1A/250VAC 1A/24VDC	2	B2
			C2	A2
1203	OFF AT MAIN MOTOR TRIP ALARM	1A/250VAC 1A/24VDC	3	B3
			C3	A3
1204	OFF AT COMMON ALARM	1A/250VAC 1A/24VDC	4	B4
			C4	A4
1205	OFF AT PLC ABNORMAL	1A/250VAC 1A/24VDC	5	B5
			C5	A5
1206	ON AT MAIN MOTOR READY TO START	1A/250VAC 1A/24VDC	6	B6
			C6	A6
1207	ON AT MAIN MOTOR RUN	1A/250VAC 1A/24VDC (0207)	7	B7
			C7	A7
			NC	B8
			NC	A8

SHORT BAR

1 2 3 4 5 6 7 8 9 10 11 12 13 14 15 16 17

C25-4A → COM2

TB29

TB NO
1
2
3
4
5
6
7
8
9
10
11
12
13
14
15
16
17
18
19
20

TB29 AA-325

TB NO.	LOCATION
1	ECC
2	
3	
4	
5	
6	
7	
8	
9	ECC
10	
11	
12	
13	
14	
15	
16	

ETC W/H ECC

POWER UNIT	CPU UNIT	INPUT UNIT #1	OUTPUT UNIT #1	OUTPUT UNIT #2	OUTPUT UNIT #3	OUTPUT UNIT #4	OUTPUT UNIT #5	OUTPUT UNIT #6	OUTPUT UNIT #7	OUTPUT UNIT #8	OUTPUT UNIT #9

unspecified cable to be SYP-0.75mm
指示無き配線は SYP-0.75mmとする事。

07_C26_N

TAIYO ELECTRIC CO., LTD.	TITLE	DRAW.NO.		SHEET NO.
	CONNECTION DIAG.	G3-15334-2		C26

kW		CONTROL PANEL for BOW THRUSTER	2
CUST : HHI 1630~	COLOR:	IP:	MASS :

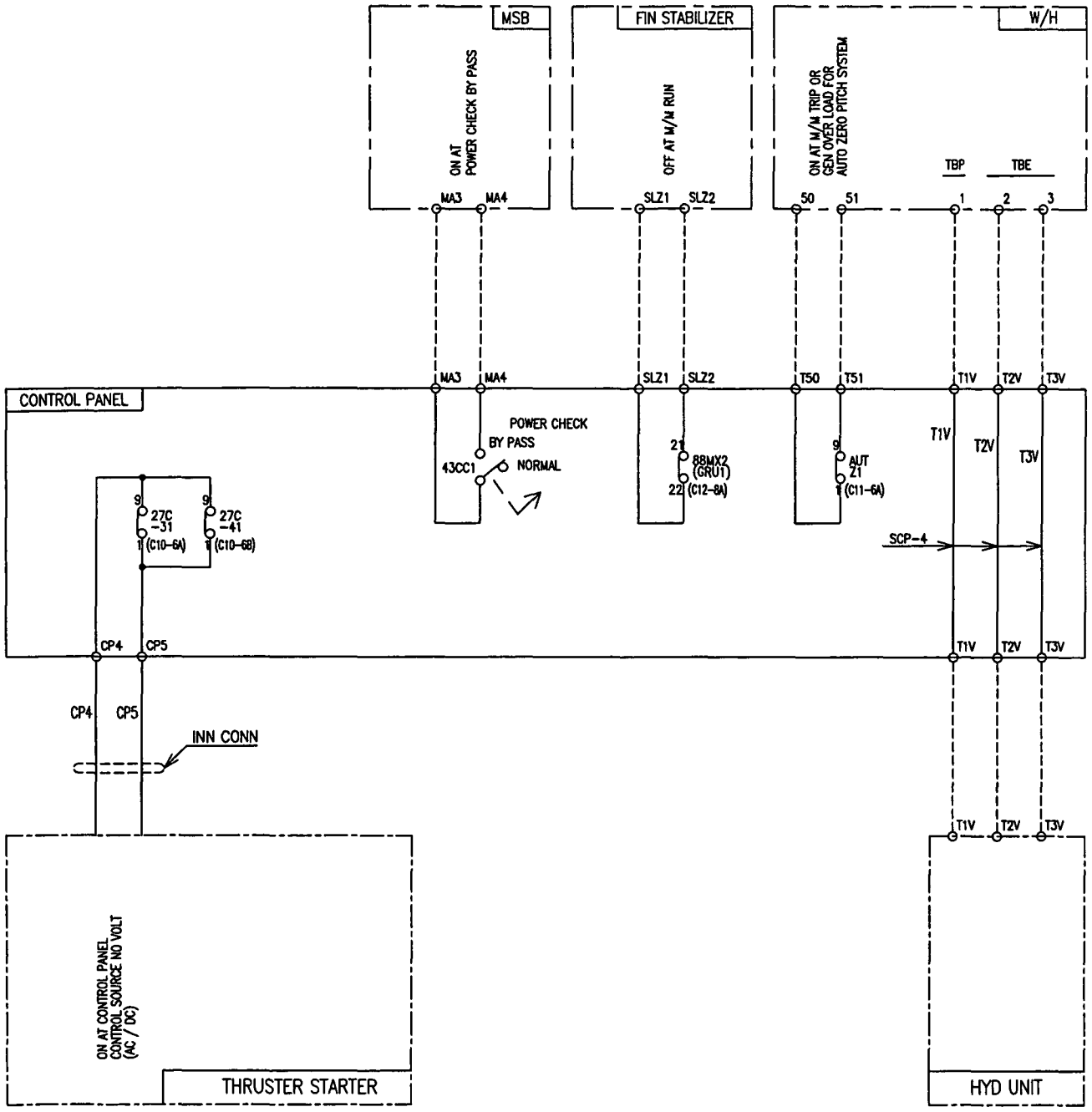

unspecified cable to be SYP-0.75mm

TAIYO ELECTRIC CO., LTD.	TITLE	DRAW.NO.		SHEET NO.
3 2 1	CONNECTION DIAG.	G3-15334-2		C27

07_C27_N

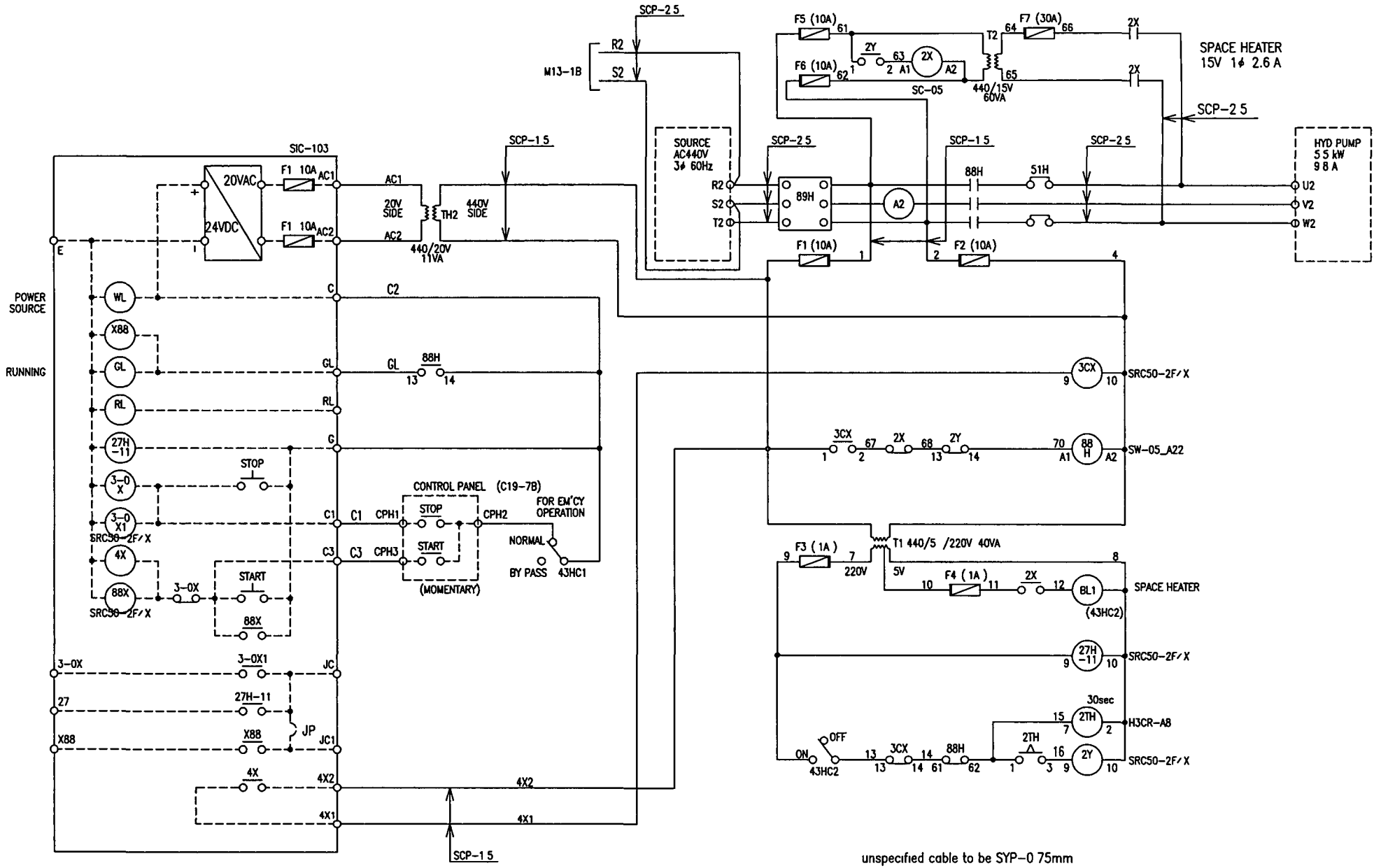

CUST. HHI 1630~	IP		5.5 kW	3	TAIYO ELECTRIC CO., LTD.	TITLE	DRAW.NO.		SHEET NO.
COLOR	MASS	HYD OIL PUMP STARTER for BOW THRUSTER			2 1	CONNECTION DIAG.	G3-15334-3		H11

¥SCAD2¥SCAD¥ZUMEN¥舶用¥物件図面¥川崎重工業¥THRUSTER¥☆_川重神戸／現代_H1630シリーズ¥001¥BOW¥08_H11 DWG, 2005/10/13 10:20:47, TG121

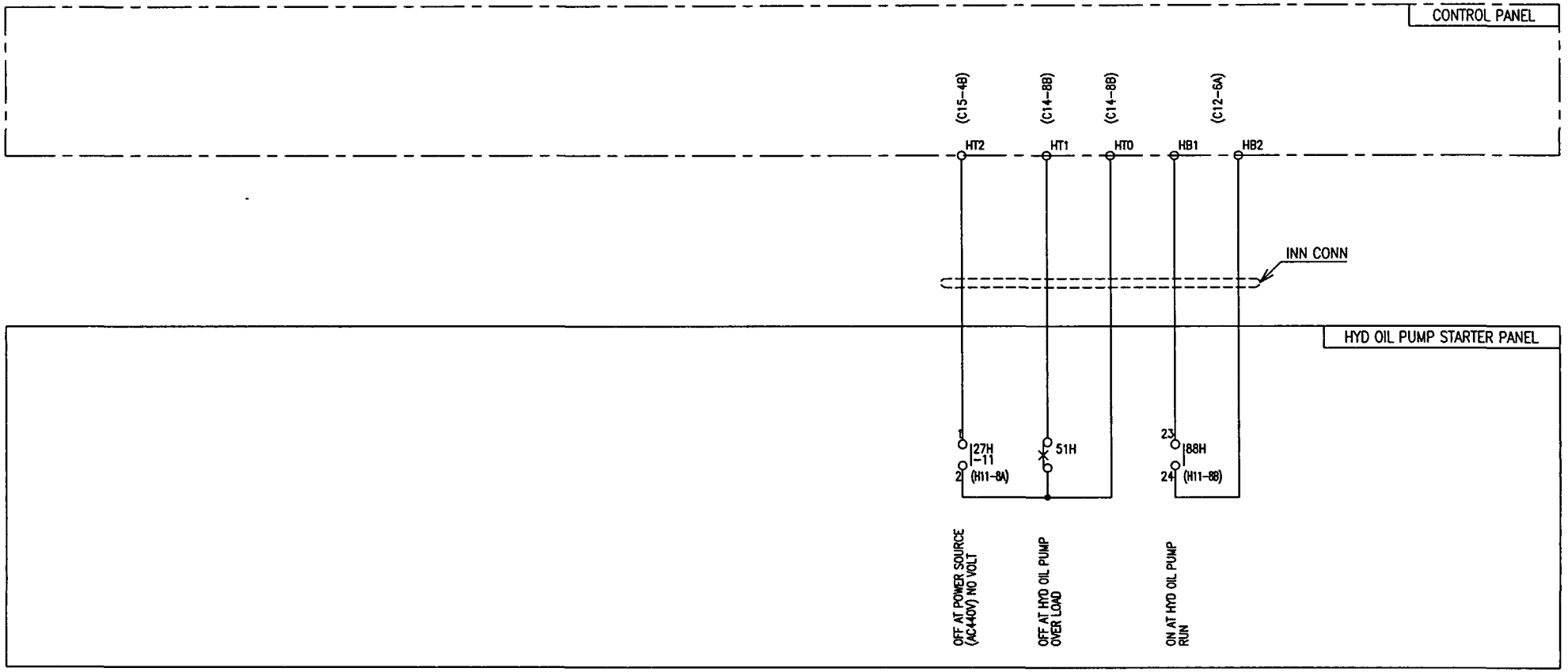

unspecified cable to be SYP-0.75mm
指示無き配線は SYP-0.75mmとする事。

CUST. . HHI 1630~	IP .		5.5 kW	3	TAIYO ELECTRIC CO., LTD.	TITLE	DRAW.NO.	SHEET NO.
COLOR:	MASS :	HYD OIL PUMP STARTER for BOW THRUSTER			2 1	CONNECTION DIAG.	G3-15334-3	H12

GB-1197-1 A 08_H12

SYMBOL	NAME	TYPE	SPECIFICATION	QT	MAKER	SHEET NO.	REMARK
A1	AMMETER	209337(SP)A	0-400-1200A/1A	1	YOKOGAWA	M11	WITH RED MARK
AT	AUTO TRANSFORMER	AT-314K	1400kW 50% 65% 80%	1	DENKI KEIKI	M11	GA-15334-5
CT1	CT	CD-40K	400/5A 40VA	1	MITSUBISHI	M11	
CT2	CT	CD-40K	400/5A 40VA	1	MITSUBISHI	M11	
CT4	CT	CW-40LP	5/1A 40VA	1	MITSUBISHI	M11	
CT5	CT	CW-40LP	5/1A 40VA	1	MITSUBISHI	M11	
89-1	DISCON SW	DT1-6H13B	7.2kV 400A 2a2b	1	TOSHIBA	M11	GA-15334-2
FM11	FUSE	PL-G	1A	1	RISYO	M11	GA-15334-4
FM12	FUSE	PL-G	1A	1	RISYO	M11	GA-15334-4
FM13	FUSE	PL-G	1A	1	RISYO	M11	GA-15334-4
FM14	FUSE	CELLO LITE UC-1	3A DF-35	1	UTSUNOMIYA	M11	
FM15	FUSE	CELLO LITE UC-1	3A DF-35	1	UTSUNOMIYA	M11	
FM16	FUSE	CELLO LITE UC-1	3A DF-35	1	UTSUNOMIYA	M11	
FM17	FUSE	CELLO LITE UC-1	3A DF-35	1	UTSUNOMIYA	M11	
FM18	FUSE	CELLO LITE UC-1	3A DF-35	1	UTSUNOMIYA	M11	
GPT	GPT	RTG-3-S	3300/ 3 110/ 3 190/100VA	1	RISYO	M11	GA-15334-4
TLR	LAMP	DR30DOL-H4C	BA9S 6.3V 1W AC110V	1	FUJI	M11	
TLS	LAMP	DR30DOL-H4C	BA9S 6.3V 1W AC110V	1	FUJI	M11	
TLT	LAMP	DR30DOL-H4C	BA9S 6.3V 1W AC110V	1	FUJI	M11	
WL1	LAMP	DR30DOL-H4W	BA9S 6.3V 1W AC110V	1	FUJI	M11	
FM23	FUSE	CELLO LITE UC-1	10A DF-35	1	UTSUNOMIYA	M12	
43MH4	COS with LAMP	AR30PL-222M4S	AC220V BA9S 2-NOTCH 2a2b	1	FUJI	M12	
SHP1	HEATER	SHCK4-2220	AC220V 200W	1	SHINOHARA	M12	

CUST. : HHI 1630~	IP :		kW	MP1	TAIYO ELECTRIC CO., LTD.	TITLE PARTS LIST BOW THRUSTER STARTER	DRAW.NO. G3-15334-MP1	SHEET NO. MP01
COLOR:	MASS :	BOW THRUSTER STARTER					

06_MP01

SYMBOL	NAME	TYPE	SPECIFICATION		QT	MAKER	SHEET NO.	REMARK
27M-11T	OFF DELAY TIMER	H3CR-H8LS	AC110V 60Hz	2c	1	OMRON	M11	with P2CF-08
R1	RESISTOR	2R	100Ω	50/100/200Ω 400W	1	OMRON	M11	GA-15334-3
51M	THERMAL RELAY 2P	TR-0NH 2P	2.8A - 4.2A	3.55A SET	1	FUJI	M11	
V0	V0 METER	CRL-80CH	0-190V	0-1500-3000-4500V	1	DAIICHI	M11	GA-15334-6
88MH1	AUXILIARY RELAY	SH-4_4A4B	AC220V 60Hz	2a2b	1	FUJI	M12	WITH SZ-A22
43MH1	COS with LAMP	AR30PL-222M4S	AC220V BA9S	2-NOTCH 2a2b	1	FUJI	M12	
FM21	FUSE	CELLO LITE UC-1	10A	DF-35	1	UTSUNOMIYA	M12	
FM22	FUSE	CELLO LITE UC-1	10A	DF-35	1	UTSUNOMIYA	M12	
64X	AUXILIARY RELAY	SRC50-2F/X	AC110V 60Hz	3a3b	1	FUJI	M13	
TM1	CONT. TRANS	NTP	220/110V	50VA	1	HISANO	M13	
FM31	FUSE	CELLO LITE UC-1	3A	DF-35	1	UTSUNOMIYA	M13	
64	G.V.R.	K2GV-T-F4 E	190V 50/60Hz	110V POWER	1	OMRON	M13	GA-15334-3
52MC	MCB	XE30NS	2P 10AT	FRONT TYPE	1	TERASAKI	M13	
27M-31	AUXILIARY RELAY	SRC50-2F/X	AC220V 60Hz	3a3b	1	FUJI	M14	
3-0X	AUX RELAY	SRC50-2F/X	AC220V 60Hz	3a3b	1	FUJI	M15	
4X	AUX RELAY	SRC50-2F/X	AC220V 60Hz	3a3b	1	FUJI	M15	
6X	AUXILIARY RELAY	SH-4_4A4B	AC220V 60Hz	2a2b	1	FUJI	M15	WITH SZ-A22
88-1X	AUXILIARY RELAY	SH-4_4A4B	AC220V 60Hz	2a2b	1	FUJI	M15	WITH SZ-A22
88-2X	AUXILIARY RELAY	SH-4_4A4B	AC220V 60Hz	2a2b	1	FUJI	M15	WITH SZ-A22
88MX1	AUXILIARY RELAY	SH-4_4A4B	AC220V 60Hz	2a2b	1	FUJI	M15	WITH SZ-A22
TM2	TRANS	NTS	440/220V	1000VA	1	HISANO	M13	
FM32	FUSE	CELLO LITE UC-1	10A	DF-35	1	UTSUNOMIYA	M13	
FM33	FUSE	CELLO LITE UC-1	10A	DF-35	1	UTSUNOMIYA	M13	

SYMBOL	NAME	TYPE	SPECIFICATION	QT	MAKER	SHEET NO.	REMARK
3CM(START)	PB A	AR30FOR-10B	1a	1	FUJI	M15	
3-0M(STOP)	PB A	AR30FOR-10R	1a	1	FUJI	M15	
19T	SD TIMER	H3CR-G8L	AC220V 60Hz 1c	1	OMRON	M15	WITH P2CF-08
6	VMC	CV-6HA	AC220V 60Hz 3a3b	1	TOSHIBA	M15	GA-15334-1
88-1	VMC	CV-6HA	AC220V 60Hz 3a3b	1	TOSHIBA	M15	GA-15334-1
88-2	VMC	CV-6HA	AC220V 60Hz 3a3b	1	TOSHIBA	M15	GA-15334-1
LS1	LIMIT SW	K244XP-2	1a1b	1	FUJI	M17	
LS2	LIMIT SW	K244XP-2	1a1b	1	FUJI	M17	
LS3	LIMIT SW	K244XP-2	1a1b	1	FUJI	M17	
88PH1	AUX RELAY	SH-4	AC220V 60HZ 2a2b	1	FUJI	M12	
43MC1	COS	AR30PR-222B	2a2b	1	FUJI	M15	
TD1	TD	AGP-3L-2-8	AC0-1A/DC4-20mA LIMIT:20mA AC220V 60Hz	1	TOYO	M11	with 8PFA

06_MP03

MP03

CUST. HHI 1630~	IP		kW	MP1	TAIYO ELECTRIC CO., LTD. 2 1	TITLE PARTS LIST BOW THRUSTER STARTER	DRAW.NO. G3-15334-MP1	SHEET NO. MP03
COLOR	MASS	BOW THRUSTER STARTER						

SYMBOL	NAME	TYPE	SPECIFICATION		QT	MAKER	SHEET NO.	REMARK
27C-31	AUX RELAY	MY4Z-CR	AC220V 60Hz	4c	1	OMRON	C10	with PYF-14A
27C-41	AUX RELAY	MY4Z-D	DC24V	4c	1	OMRON	C10	with PYF-14A
FC01	FUSE	CELLO LITE UC-1	5A	DF-35	1	UTSUNOMIYA	C10	
FC02	FUSE	CELLO LITE UC-1	5A	DF-35	1	UTSUNOMIYA	C10	
FC03	FUSE	CELLO LITE UC-1	5A	DF-35	1	UTSUNOMIYA	C10	
FC04	FUSE	CELLO LITE UC-1	5A	DF-35	1	UTSUNOMIYA	C10	
FC05	FUSE	CELLO LITE UC-1	1A	DF-35	1	UTSUNOMIYA	C10	
WL2	LAMP	DR30DOL-4W	30V		1	FUJI	C10	WHITE
DCCC1	POWER SUPPLY	JWS150-24	IN:85~265VAC	OUT:24VDC 6.5A	1	DENSEI-LAMDA	C10	GA-15334-31
AUTZ1	AUX RELAY	MY4Z-CR	AC220V 60Hz	4c	1	OMRON	C11	with PYF-14A
49HH	MOTOR GUARD	ACT1C-1L	AC220V 60Hz	1c	1	FUJI ELECTRIC	C11	<YARD SUPPLY>
49STH	MOTOR GUARD	3RN10 00-1AM00	AC220V 60Hz	1c	1	SIEMENS	C11	<YARD SUPPLY>
49STX	MOTOR GUARD	3RN10 00-1AM00	AC220V 60Hz	1c	1	SIEMENS	C11	<YARD SUPPLY>
49X	MOTOR GUARD	ACT1C-1L	AC220V 60Hz	1c	1	FUJI ELECTRIC	C11	<YARD SUPPLY>
43CC1	COS	AR30PR-222B	2a2b		1	FUJI	C12	
GRU-1	GRU	GRU-16D	DC24V		1	TAIYO	C12	
5EM	PB B	AR30FOR-01R	1b		1	FUJI	C12	RED
CABLE-PT1	CABLE	XW2Z-200T 2m	2m		1	OMRON	C13	
FC00A	FUSE	CELLO LITE UC-1	10A	DF-35	1	UTSUNOMIYA	C10	
FC00B	FUSE	CELLO LITE UC-1	10A	DF-35	1	UTSUNOMIYA	C10	

CUST. : HHI 1630~	IP :		kW	CP1	TAIYO ELECTRIC CO., LTD.	TITLE PARTS LIST CONTROL PANEL	DRAW.NO. G3-15334-CP1	SHEET NO. CP01
COLOR:	MASS :	CONTROL PANEL for BOW THRUSTER			1			

07_CP01

SYMBOL	NAME	TYPE	SPECIFICATION	QT	MAKER	SHEET NO.	REMARK
PLC (CPU)	PLC(CPU)	CJ1M-CPU12	with MEMORY CARD HMC-EF372(30MB)	1	OMRON	C13	10K STEP I/O : 320
INPUT #1	PLC(INPUT)	CJ1W-ID261	DC24V:4.1mA IN:64	1	OMRON	C13	TRANSISTOR
OUTPUT #1	PLC(OUTPUT)	CJ1W-OC201	DC24V:48mA OUT:8 G6D-4-SB x1	1	OMRON	C13	2A/AC250V;DC24V
OUTPUT #2	PLC(OUTPUT)	CJ1W-OC201	DC24V:48mA OUT:8 G6D-4-SB x2	1	OMRON	C13	2A/AC250V;DC24V
OUTPUT #3	PLC(OUTPUT)	CJ1W-OC201	DC24V:48mA OUT:8	1	OMRON	C13	2A/AC250V;DC24V
OUTPUT #6	PLC(OUTPUT)	CJ1W-OC201	DC24V:48mA OUT:8 G6D-4-SB x3	1	OMRON	C13	2A/AC250V;DC24V
OUTPUT #9	PLC(OUTPUT)	CJ1W-OC201	DC24V:48mA OUT:8 G6D-4-SB x3	1	OMRON	C13	2A/AC250V;DC24V
OUTPUT #4	PLC(OUTPUT)	CJ1W-OC211	DC24V:96mA OUT:16	1	OMRON	C13	2A/AC250V;DC24V
OUTPUT #5	PLC(OUTPUT)	CJ1W-OC211	DC24V:96mA OUT:16	1	OMRON	C13	2A/AC250V;DC24V
OUTPUT #7	PLC(OUTPUT)	CJ1W-OC211	DC24V:96mA OUT:16	1	OMRON	C13	2A/AC250V;DC24V
OUTPUT #8	PLC(OUTPUT)	CJ1W-OC211	DC24V:96mA OUT:16	1	OMRON	C13	2A/AC250V;DC24V
PLC (POWER)	PLC(POWER)	CJ1W-PD025	DC24V	1	OMRON	C13	
LCD	PT	NS5-SQ00B-V1	DC24V with HMC-EF372(30MB)	1	OMRON	C13	with NT31C-KBA05
TVS1	TVS	1.5KE33CA		1	GENERAL SEMI CONDUCTOR	C13	
CABLE-I-01	CABLE	XW2Z-300D	3m	1	OMRON	C14	
TB1	TERMINAL	XW2F-20G7-IN16	IN:16 DC24V	1	OMRON	C14	
TB2	TERMINAL	XW2F-20G7-IN16	IN:16 DC24V	1	OMRON	C15	
CABLE-I-02	CABLE	XW2Z-300D	3m	1	OMRON	C16	
TB3	TERMINAL	XW2F-20G7-IN16	IN:16 DC24V	1	OMRON	C16	
TB4	TERMINAL	XW2F-20G7-IN16	IN:16 DC24V	1	OMRON	C17	
49STH1	AUX RELAY	MY4Z-CR	AC220V 60Hz 4c	1	OMRON	C11	with PYF-14A
49STX1	AUX RELAY	MY4Z-CR	AC220V 60Hz 4c	1	OMRON	C11	with PYF-14A

CUST. HHI 1630~	IP		kW CP1	TAIYO ELECTRIC CO., LTD.	TITLE PARTS LIST CONTROL PANEL	DRAW.NO. G3-15334-CP1	SHEET NO. CP02
COLOR	MASS	CONTROL PANEL for BOW THRUSTER					

07_CP02

CP02

SYMBOL	NAME	TYPE	SPECIFICATION	QT	MAKER	SHEET NO.	REMARK
FC81	FUSE	CELLO LITE UC-1	3A DF-35	1	UTSUNOMIYA	C18	
TB21	TERMINAL	AA-325	AC220V/1A 20P O/S NO. E1039	1	TAIYO	C18	with CABLE : 3m
TB22	TERMINAL	AA-325	AC220V/1A 20P O/S NO. E1039	1	TAIYO	C19	with CABLE : 3m
TB23	TERMINAL	AA-325	AC220V/1A 20P O/S NO. E1039	1	TAIYO	C20	with CABLE : 3m
TB24	TERMINAL	AA-325	AC220V/1A 20P O/S NO. E1039	1	TAIYO	C21	with CABLE : 3m
TB25	TERMINAL	AA-325	AC220V/1A 20P O/S NO. E1039	1	TAIYO	C22	with CABLE : 3m
TB26	TERMINAL	AA-325	AC220V/1A 20P O/S NO. E1039	1	TAIYO	C23	with CABLE : 3m
TB27	TERMINAL	AA-325	AC220V/1A 20P O/S NO. E1039	1	TAIYO	C24	with CABLE : 3m
TB28	TERMINAL	AA-325	AC220V/1A 20P O/S NO. E1039	1	TAIYO	C25	with CABLE : 3m
TB29	TERMINAL	AA-325	AC220V/1A 20P O/S NO. E1039	1	TAIYO	C26	with CABLE : 3m

07_CP03

CP03

CUST. HHI 1630~	IP		kW CP1	TAIYO ELECTRIC CO., LTD.	TITLE: PARTS LIST CONTROL PANEL
COLOR	MASS	CONTROL PANEL for BOW THRUSTER			DRAW.NO. G3-15334-CP1

SHEET NO. CP03

SYMBOL	NAME	TYPE	SPECIFICATION		QT	MAKER	SHEET NO.	REMARK
A2	A METER	209337(SP)A	0-20~60	IN: 0-20A	1	YOKOGAWA	H11	
27H-11	AUX RELAY	SRC50-2F/X	AC220V 50/60Hz	3a3b	1	FUJI	H11	
2Y	AUX RELAY	SRC50-2F/X	AC220V 50/60Hz	3a3b	1	FUJI	H11	
3-0X	AUX RELAY	SRC50-2F/X	AC220V 60Hz	3a3b	1	FUJI	H11	
3CX	AUX RELAY	SRC50-2F/X	AC440V 50/60Hz	3a3b	1	FUJI	H11	
4X	AUX RELAY	SRC50-2F/X	AC220V 60Hz	3a3b	1	FUJI	H11	
43HC2	COS with LAMP	AR30PL-22254S	AC6.3V BA9S	2-NOTCH 2a2b	1	FUJI	H11	
43HC1	COS	LA3S-2C1	1c		1	IZUMI	H11	
89H	DIS CON	XS30NNB-F	3P 30A		1	TERASAKI	H11	
F1	FUSE	CELLO LITE UC-1	10A	DF-35	1	UTSUNOMIYA	H11	
F2	FUSE	CELLO LITE UC-1	10A	DF-35	1	UTSUNOMIYA	H11	
F3	FUSE	CELLO LITE UC-1	1A	DF-35	1	UTSUNOMIYA	H11	
F4	FUSE	CELLO LITE UC-1	1A	DF-35	1	UTSUNOMIYA	H11	
F5	FUSE	CELLO LITE UC-1	10A	DF-35	1	UTSUNOMIYA	H11	
F6	FUSE	CELLO LITE UC-1	10A	DF-35	1	UTSUNOMIYA	H11	
F7	FUSE	CELLO LITE UC-1	30A	DF-35	1	UTSUNOMIYA	H11	
2X	MC	SC-05	AC440V 50/60Hz		1	FUJI	H11	
88H	MC	SW-05_A22	AC440V 50/60Hz	2a	1	FUJI	H11	with SZ-A22
SIC-103	PC BOARD	SIC-103	UVP		1	TAIYO	H11	
51H	THERMAL RELAY	TR-ON 2P	9~13A 9.8A SET	1a1b	1	FUJI	H11	

CUST. : HHI 1630~	IP :		kW	HP1	TAIYO ELECTRIC CO., LTD.	TITLE PARTS LIST HYD OIL PUMP STARTER	DRAW.NO. G3-15334-HP1	SHEET NO. HP01
COLOR:	MASS :	HYD OIL PUMP STARTER for BOW THRUSTER						

08_HP01

SYMBOL	NAME	TYPE	SPECIFICATION	QT	MAKER	SHEET NO.	REMARK
2TH	TIMER	H3CR-A8	AC220V 50/60Hz	1	OMRON	H11	with P2CF-08
T1	TRANS	HTR-0442	440/5 /220V 40VA	1	HISANO	H11	
T2	TRANS	NTP	440/15V 60VA	1	HISANO	H11	
TH2	TRANS	EA078-1	440/20V 11VA	1	PONI	H11	

CUST. HHI 1630~	IP		kW	HP1	TAIYO ELECTRIC CO., LTD.	TITLE PARTS LIST HYD OIL PUMP STARTER	DRAW.NO. G3-15334-HP1	SHEET NO. HP02
COLOR	MASS	HYD OIL PUMP STARTER for BOW THRUSTER					

08_HP02

HP02

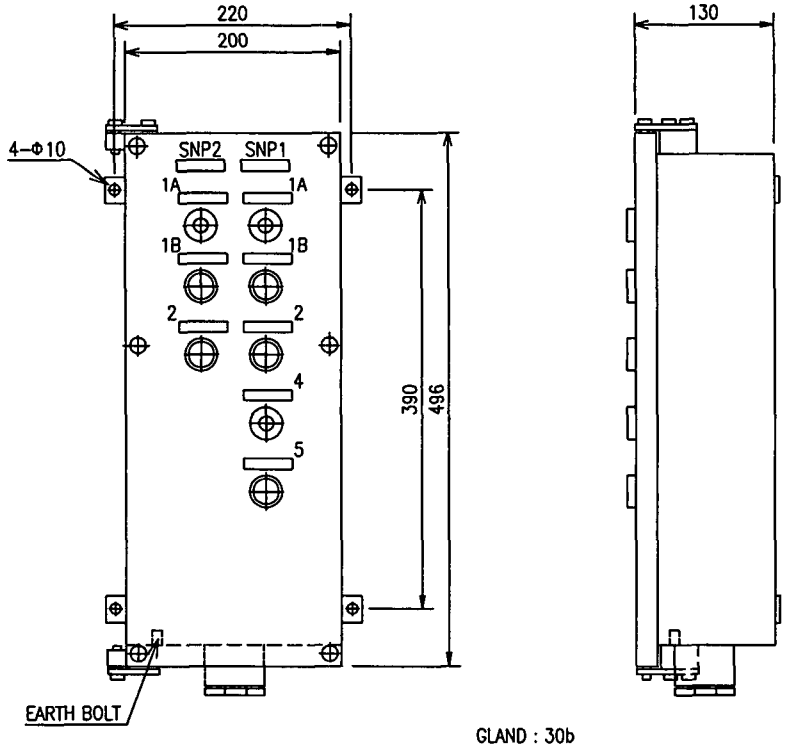

GLAND : 30b

NAME PLATE

NO.	DESCRIPTION	MARK	NP
SNP1	BOW THRUSTER	–	1AH
SNP2	HYD OIL PUMP	–	1AH
~~SNP3~~	~~BOW THRUSTER RM FAN~~	~~–~~	~~1AH~~
1A	RUNNING	GL1/GL2	1AH
1B	START	(3CM)/(3CH)	1AH
2	STOP (PUSH LOCK)	(3-0M/3-0H)	1AH
~~3~~	~~LOCAL – STARTER~~	~~(43RT)~~	~~1AH~~
4	MAIN GEN POWER AVAIL.	WL1	1AH
5	MAIN MOTOR START REQUEST	(3MRQ)	1AH
~~6~~	~~EM'CY STOP (PUSH LOCK)~~	~~(3-0E)~~	~~1AH~~

A 09_01_IP56

L21

CUST. : HHI 1630~	IP : 56		kW	L21	TAIYO ELECTRIC CO., LTD.	TITLE	DRAW.NO.	SHEET NO.
COLOR:	MASS : Ca 3 Kg	LOCAL CONTROL BOX for BOW THRUSTER				OUTLINE	G3-15334-L21	L21

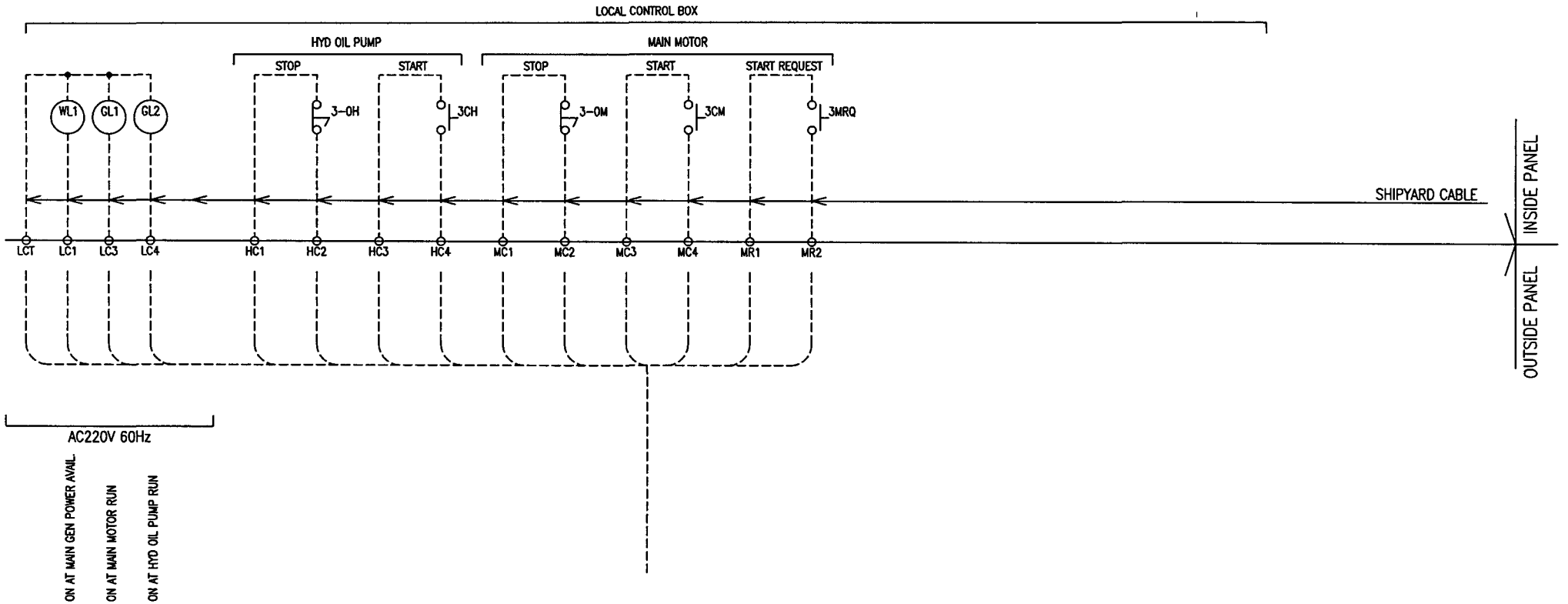

CUST. HHI 1630~	IP		kW	21	TAIYO ELECTRIC CO., LTD.	TITLE	DRAW.NO.	SHEET NO.
COLOR	MASS	LOCAL CONTROL BOX for BOW THRUSTER				CONNECTION DIAG.	G3-15334-21 SL21	SL21

09_02

SYMBOL	NAME	TYPE	SPECIFICATION	QT	MAKER	SHEET NO.	REMARK
GL1	INDICATING LAMP	DR30DOL-M4G	BA9S 6.3V 1W with 220V Tr	1	FUJI	SL21	
GL2	INDICATING LAMP	DR30DOL-M4G	BA9S 6.3V 1W with 220V Tr	1	FUJI	SL21	
WL1	INDICATING LAMP	DR30DOL-M4W	BA9S 6.3V 1W with 220V Tr	1	FUJI	SL21	
3CH	PB	AR30FOR-10B	1a with CAP(AHX052)	1	FUJI	SL21	
3CM	PB	AR30FOR-10B	1a with CAP(AHX052)	1	FUJI	SL21	
3MRQ	PB	AR30FOR-10B	1a with CAP(AHX052)	1	FUJI	SL21	
3-0H	PB LOCK B	AR30F5R-01R	1b with CAP(AHX052)	1	FUJI	SL21	ALTERNATIVE
3-0M	PB LOCK B	AR30F5R-01R	1b with CAP(AHX052)	1	FUJI	SL21	ALTERNATIVE

CUST. : HHI 1630~	IP :		kW 21	TAIYO ELECTRIC CO., LTD.	TITLE	DRAW.NO.	SHEET NO.
COLOR:	MASS :	LOCAL CONTROL BOX for BOW THRUSTER			PARTS LIST	G3-15334-21	PL21

MS-12706

1) POWER SOURCE FOR LAMP: AC220V
2) INPUT: 400/1A
3) QT: 1

102(Rectifier type:SVF-11EZ)
102(Permanent-magnet Moving coil type:DVF-11EZ)
129(Moving-iron type:AVF-11EZ)

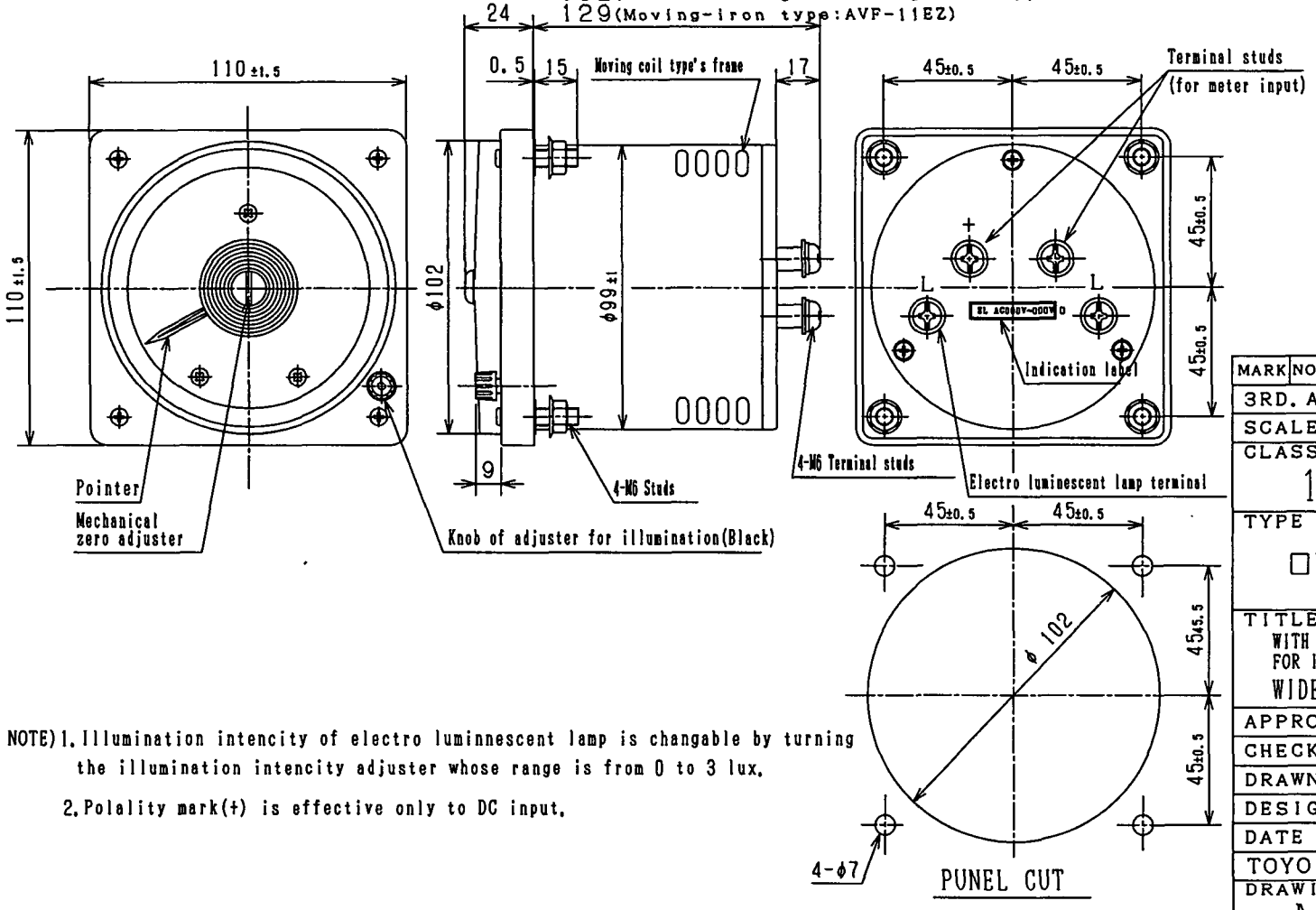

NOTE) 1. Illumination intencity of electro luminnescent lamp is changable by turning the illumination intencity adjuster whose range is from 0 to 3 lux.

2. Polality mark(+) is effective only to DC input.

MARK	NO	DATE	DESCRIPTION	APP	CHE	DRA

3RD. ANGLE PROJECTION	
SCALE 1:2	DIM IN mm
CLASSIFICATION	1220
TYPE	□VF-11EZ
TITLE	WITH KNOB OF ADJUSTER FOR ILLUMINATION(BLACK) WIDE ANGLE METER
APPROVED	
CHECKED	
DRAWN	
DESIGNED	
DATE	June 23, 2000
TOYO KEIKI CO., LTD.	
DRAWING NO.	MS-12706

CUST. : HHI 1630~	IP : 40	AVF-11EZ	kW	A1	TAIYO ELECTRIC CO., LTD.	TITLE AMMETER with EL BOARD & DIMMER FOR BOW THRUSTER	DRAW.NO. G3-15334-A1	SHEET NO. A1
COLOR:	MASS :	AMMETER WITH EL BOARD & DIMMER						

10_AM_AP40X110_DM

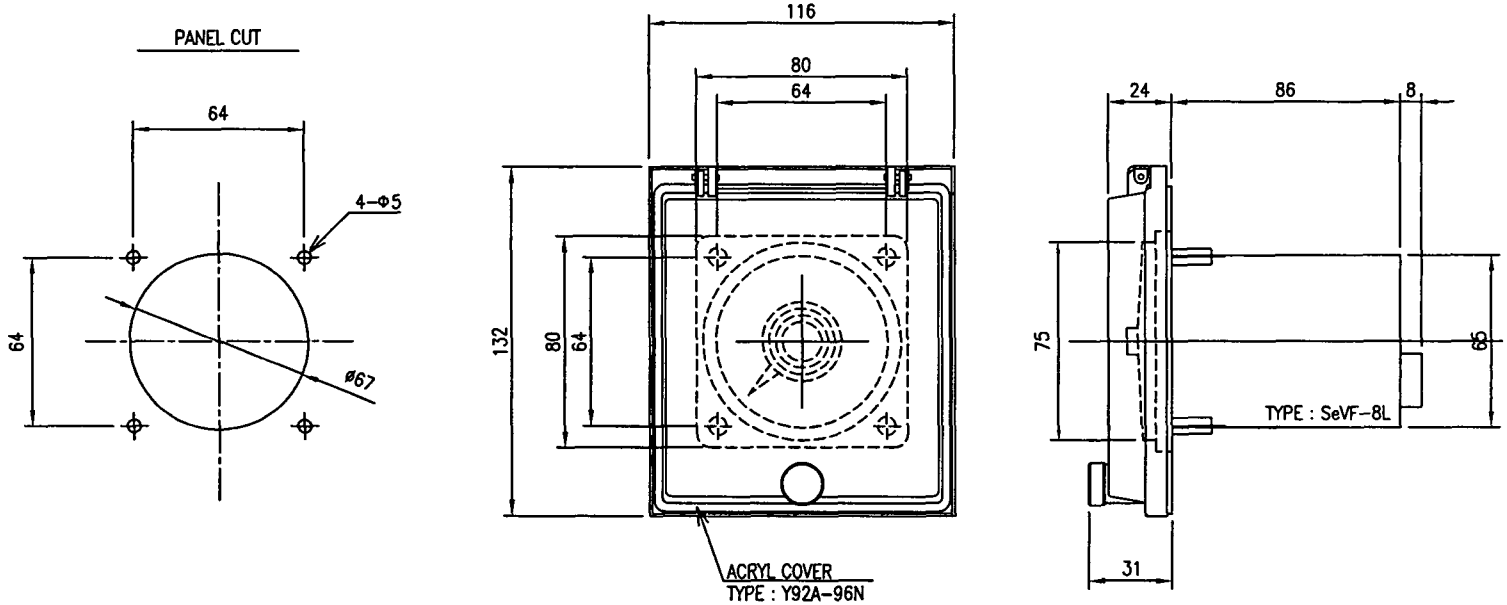

The spec. of VR & the circuit of VR.
The VR & the circuit of VR are not TAIYO supply.

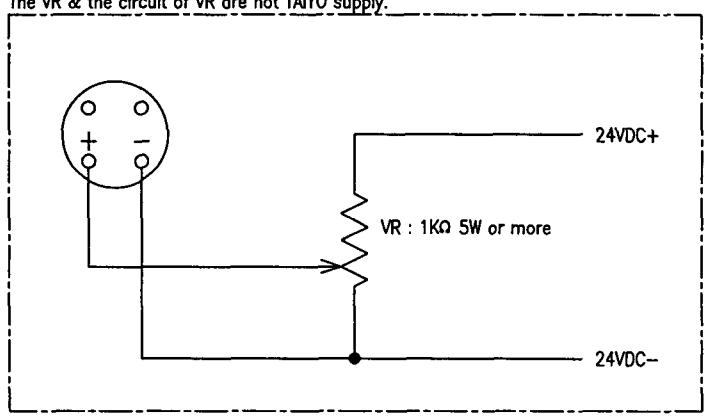

1) POWER SOURCE FOR LAMP: DC24V
2) INPUT: 400/1A
3) QT: 2

10A_AM_IP56X80

CUST. : HHI 1630~	IP : 56	SeVF-8L	kW	A2	TAIYO ELECTRIC CO., LTD.	TITLE	DRAW.NO.		SHEET NO.
COLOR:	MASS :	AMMETER with LED LAMP			2 1	AMMETER with LED LAMP FOR BOW THRUSTER	G3-15334-A2		A2

NO.	NAME OF PARTS	TYPE	MATERIAL	QT/SET	QT/VESS	REMARKS
①	EARTHING CLAMP	MA122-B	C2680P 1/2H	3	3	
②	EARTHING BRAID	22mm² x 2m	LV22	3	3	
③	COMMON EARTHING BRAID	8mm² x 2m	LV8	1	1	
④	EARTHING OPERATION STICK	ø 25	FRP	1	1	FITTED ON STARTER PANEL
⑤	EARTH BOLTS	SA110	BC2	1	1	
⑥	EARTH DETECTOR	HSF-7	-	1	1	AC80V~7000V
⑦	PARTS BOX	400x400x300	PAINT : 7.5BG 7/2	1	1	

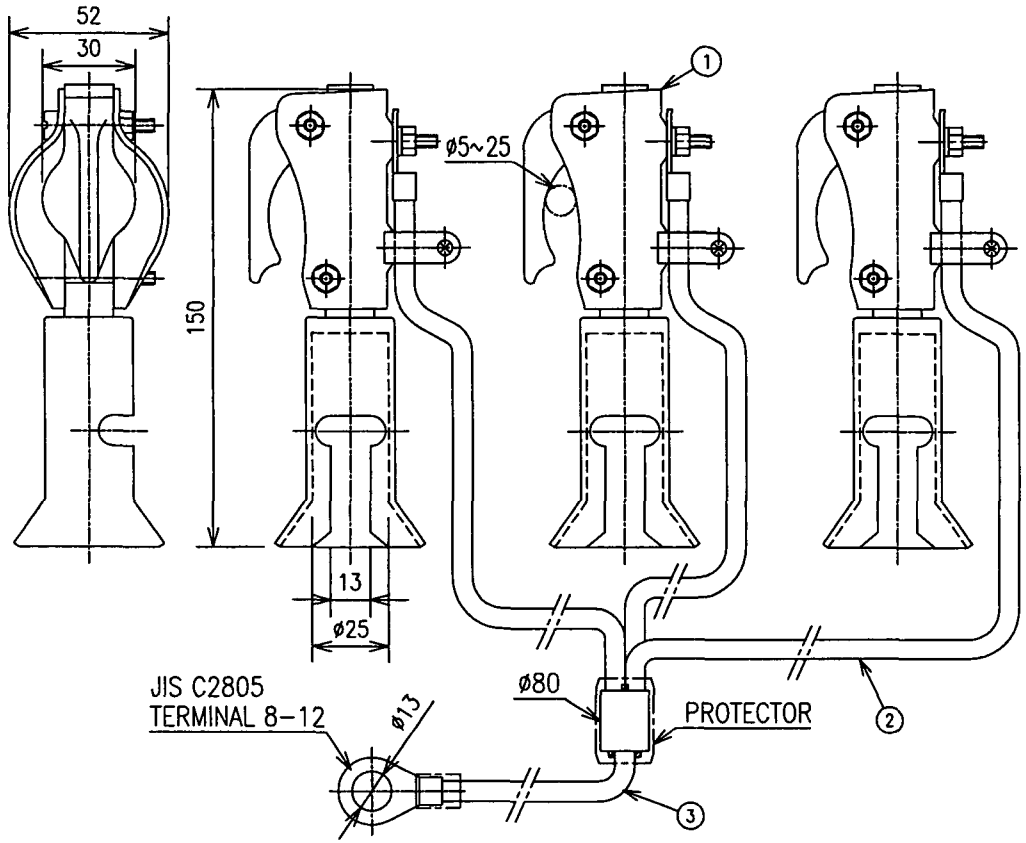

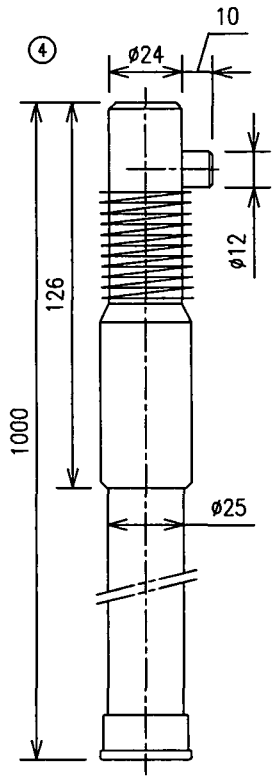

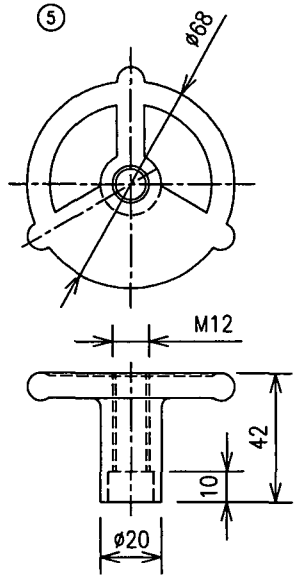

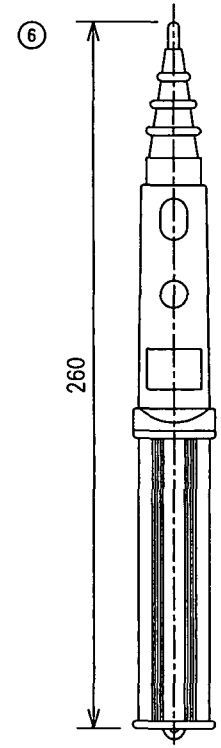

CUST. : HHI 1630~	IP :		kW	1	TAIYO ELECTRIC CO., LTD.	TITLE	DRAW.NO.	SHEET NO.
COLOR:	MASS :	PORTABLE EARTH for BOW THRUSTER STARTER				MA122B-10 PORTABLE EARTH SWITCH	G3-15334-1	PES1

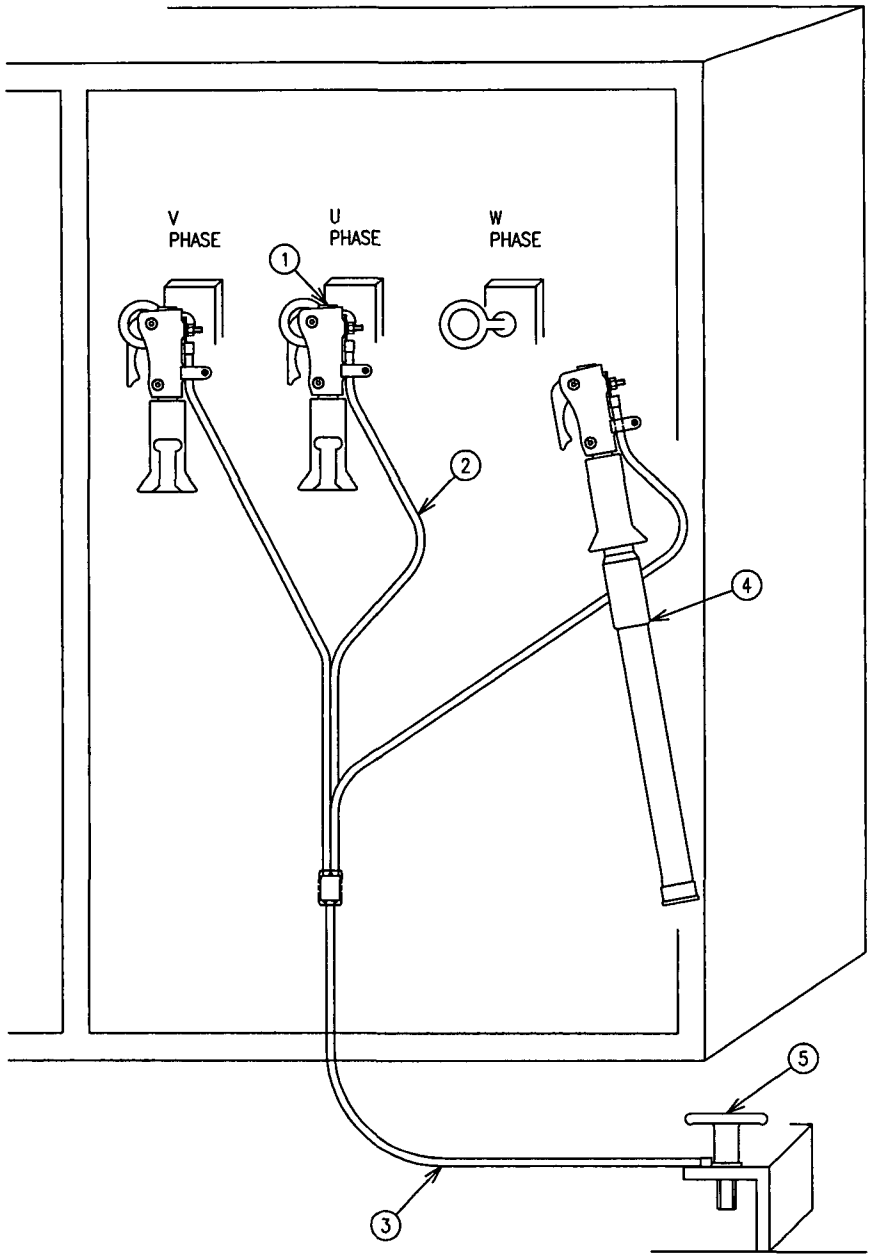

CUST. HHI 1630~	IP			kW	2	TAIYO ELECTRIC CO., LTD.	TITLE ASSENBLY DRAWING FOR EARTHING EQUIPMENTS	DRAW.NO. G3−15334−2	SHEET NO PES2
COLOR ═══	MASS	PORTABLE EARTH for BOW THRUSTER STARTER							

11_02

PES2

SHIP NO	SPARE PARTS LIST FOR	USE	SETS PER VESSEL
HHI 1630 1631 1671 1672 1699 1700 1701 1733	STARTER	BOW THRUSTER	

ITEM NO	NAME OF PART	OUTLINE	QUANTITY WORKING PER SET	QUANTITY WORKING PER VESS	QUANTITY SPARE	REMARKS		BOX NO
11	FUSE WITH GPT	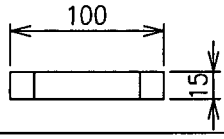	3	3	3	PL-G 1A		
12	PROTECTION SHEET OF LCD	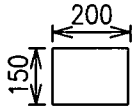			4	NT31C-KBA05		
13-1	MAGNETIC CONTACTOR SC-05	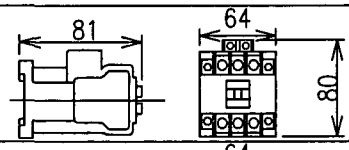	1	1	1	220V 60Hz		
13-2			4	4	1	440V 60Hz		
	MAGNETIC CONTACTOR SC-5-1	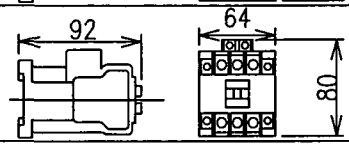				110V 60Hz		
						440V 60Hz		
15-1	THERMAL RELAY TR-0NH 2P	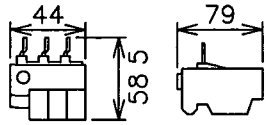	2	2	1	2 8-4 2A		
15-2			2	2	1	9-13A		
	THERMAL RELAY TR-5-1N 2P	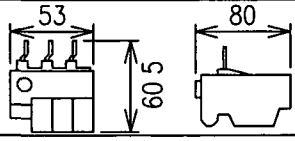				12-18A		
17-1	TIMER	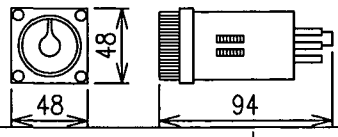	2	2	1	H3CR-A8		
17-2			2	2	1	H3CR-G8L	220V 60Hz	
						H3CR-H8L-M		
17-4			1	1	1	H3CR-H8L-S	110V 60Hz	
18-1	FUSE	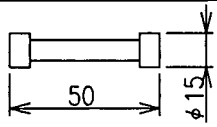	2	2	2	30A	CELLO LITE UC-1	
18-2			1	1	1	20A		
18-3			15	15	15	10A		
18-4			8	8	8	5A		
18-5			8	8	8	3A		
18-6			6	6	6	1A		
	DRIVE UNIT VACUUM MAGNET CONTACTOR CV-6HA	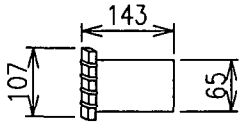				3Z9G0079G001 (AC/DC 110V)		
19-2			1	3	1	3Z9G0079G004 (AC/DC 220V)		
20-1	SIC UNIT		2	2	1	SIC-103		

TAIYO ELECTRIC CO., LTD.	TITLE	DRAW.NO		SHEET NO
2 1	SPARE PARTS LIST	G3-15334-SP2		SP2

12_SPL02

SHIP NO.	SPARE PARTS LIST FOR	USE	SETS PER VESSEL
HHI: 1630 1631 1671 1672 1699 1700 1701 1733	STARTER	BOW THRUSTER	

ITEM NO	NAME OF PART	OUTLINE	QUANTITY WORKING PER SET	QUANTITY WORKING PER VESS	QUANTITY SPARE	REMARKS		BOX NO.
21	GROUP RELAY UNIT GRU-16D	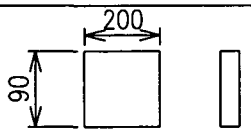	2	2	1	DC24V		
22-1	GLOBE FOR LAMP	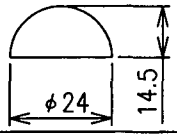	7	7	1	WHITE	DR30	
22-2			6	6	1	GREEN		
22-3			2	2	1	RED		
						ORANGE		
						BLUE		
23-2	DITTO	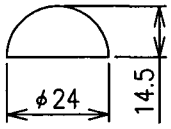	3	3	1	TRANSPARENT	DR30	
	DITTO	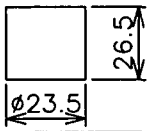				GREEN	AR30GOL	
						RED		
25-1	BULB	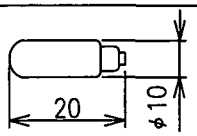	16	16	16	6.3V 1W	BA9S/13	
25-2			2	2	2	DC24V		
26	DOOR SWITCH	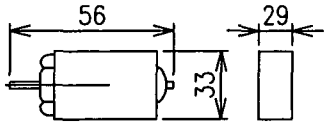	3	3	1	K244XP-2		
27-1	AUX RELAY	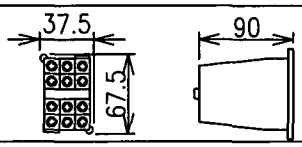	1	1	1	110V	SRC 50-2F/X 3a3b	
27-2			14	14	2	220V		
27-3			2	2	1	440V		
						110V	MY4Z-CR	
28-2	AUX RELAY	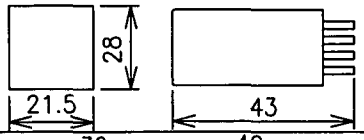	4	4	1	220V		
							MY4Z-D	
28-4			2	2	1	DC24V		
						SZ-A11	1a1b	
29-2	AUX CONTACT BLOCK	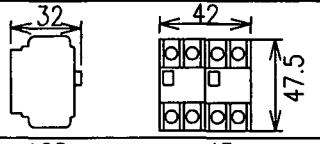	12	12	2	SZ-A22	2a2b	
						SZ-A40	4a	
30-2	AUX RELAY	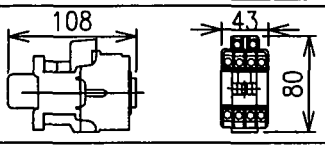	7	7	1	2a2b	SH-4 220V 60Hz	
						4a		

TAIYO ELECTRIC CO., LTD.	TITLE	DRAW.NO.		SHEET NO.
	SPARE PARTS LIST	G3-15334-SP3		SP3

12_SPL03

SHIP NO	SPARE PARTS LIST FOR	USE	SETS PER VESSEL
HHI 1630 1631 1671 1672 1699 1700 1701 1733	STARTER	BOW THRUSTER	

ITEM NO	NAME OF PART	OUTLINE	QUANTITY			REMARKS	
			WORKING		SPARE		BOX NO
			PER SET	PER VESS			
40	SPARE PART BOX	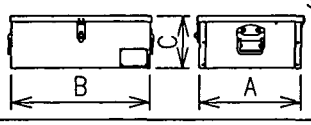 STEEL BOX PAINT 7.5Y9/6			2		

NO	JIS NO	A	B	C
#1	12-10	150	200	100
#2	23-20	200	350	200
#3	44-30	400	400	300
#5	48-15	400	800	150
#6		500	500	500

12_SPL04

TAIYO ELECTRIC CO., LTD.	TITLE	DRAW.NO.		SHEET NO.
1	SPARE PARTS LIST	G3-15334-SP4		SP4

2004年12月6日

交流電磁接触器予備品一覧表(620F形)
SPARE PARTS LIST

No.	品　　名 (PARTS NAME)	略　　図 (SKETCH)	部品番号 (PARTS No.)	数量／台 'Qs／UNIT
1.	固定アークコンタクト (FIXED ARC CONTACT)	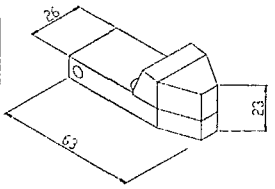	MF4－01－051	3
2.	可動アークコンタクト (MOVABLE ARC CONTACT)	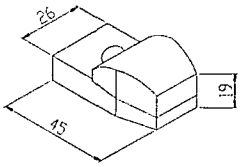	MF4－01－054	3
3.	投入コイル (CLOSING COIL)	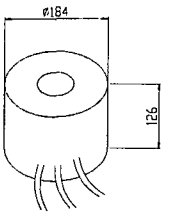	~~MF4－02－1217A~~ ~~(AC100／110V)~~ MF4－02－135B (AC200／220V)	1
4.	マイクロスイッチ (MICRO SWITCH)	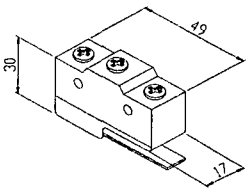	X-5GW55-B30	1
5.	補助開閉器 (AUXILIARY SWITCH)	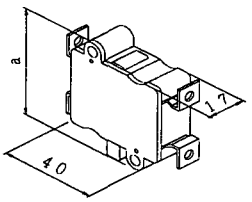	~~SY－C~~ (a寸法:48)	~~1~~ (AUX 2a2bの場合、不要)
			LY－C (a寸法:56)	2
6.	主接触バネ (MAIN CONTACT SPRING)	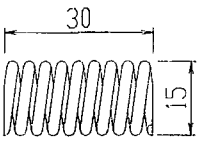	MF4－02－115A	18
7.	補助接触バネ (SUBSIDIARY SPRING)	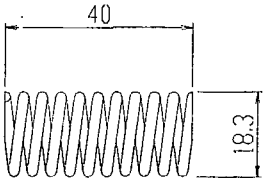	MF4－01－156A	6
8.	遮断バネ (INTERRUPTING SPRING)	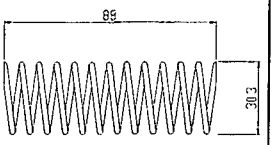	MF4－01－018	2

TAIYO ELECTRIC CO.,LTD.

INSTRUCTION MANUAL
Thruster Starter Panel

HYUNDAI HEAVY INDUSTRIES CO., LTD.
H1630

Read this instruction manual thoroughly and understand its contents sufficiently before operation, inspection and maintenance of this product.

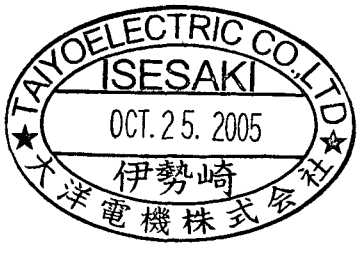

TAIYO ELECTRIC CO.,LTD.

IG15334

--- CONTENTS / 目次 ---

NO./番号	NAME/機器名称	TYPE/形式	Sheet No.
1.	GENERAL for STARTER PANEL 始動器盤一般	with PC BOARD	A1～
2.	OPERATION MAMUAL for TOUCH PANEL ﾀｯﾁ ﾊﾟﾈﾙ操作手順書		PTM-1～9
3.	TOUCH PANEL ﾀｯﾁ ﾊﾟﾈﾙ	NS Series	B1～
4.	PROGRAMMABLE LOGIC CONTROLLERS ﾌﾟﾛｸﾞﾗﾏﾌﾞﾙ ﾛｼﾞｯｸ ｺﾝﾄﾛｰﾗｰ (PLC)	CJ1M Series	C1～

CONTENTS

1. Introduction ····· (1)
2. Safety ····· (2)
2.1 Cautions for safety ····· (3)
2.1.1 Cautions for safety during transportation ····· (3)
2.1.2 Cautions for safety during installation prior to operation ··· (3)
2.1.3 Caution during energization ····· (4)
2.1.4 Caution for modification ····· (4)
2.1.5 Caution for protective devices ····· (4)
2.1.6 Cautions for check and maintenance ····· (4)
2.2 Safety label ····· (5)
2.2.1 Safety label for preventing electric shock ····· (5)
2.2.2 Safety label for megger and voltage withstand test ····· (5)
3. Outline of the product ····· (6)
3.1 Purpose of use ····· (6)
3.2 Features of the product ····· (6)
4. Qualification of operators ····· (6)
5. Identification items ····· (7)
6. Unloading, unpacking and storage ····· 6-1
6.1 Unloading ····· 6-1
6.2 Unpacking (when packaged in a wooden frame) ····· 6-1
6.3 Caution for storage ····· 6-1
7. Installation ····· 7-1
7.1 Installation work ····· 7-1～2
8. Operation ····· 8-1
8.1 Check prior to operation ····· 8-1
8.1.1 Installation states ····· 8-1～2
8.2 Configuration ····· 8-2
8 3 Operation ····· 8-3
8.3.1 Running ····· 8-3
8 3.1.1 Starting ····· 8-3
8.3 1.2 Stop ····· 8-4
8.3.1.3 Time adjustment of a timer ····· 8-5
8 3 1.4 Internal circuit of printed circuit board ····· 8-6
9 Check and maintenance ····· 9-1
9 1 Purpose of check and maintenance ····· 9-1
9 2 Classification of check and maintenance ····· 9-2
9 2.1 Routine check ····· 9-2
9.2 2 Periodical check ····· 9-2
9.2 3 Temporary check ····· 9-2
9 3 Safe work ····· 9-3
9.3 1 Basic matters for safe work ····· 9-3
9.3 2 General matters for safe work ····· 9-3
9.4 Recording of check and maintenance ····· 9-3
9 5 What are to be checked and maintained ····· 9-4
9 5 1 General notes ····· 9-4～5
9 5 2 Check and maintenance items ····· 9-6～8
10. Troubleshooting ····· 10-1
11. Check list ····· 11-1～2

A1

1. Introduction

This instruction manual describes how to handle starter and safety precautions when using this.
Before you use your starter, be sure to read this manual and understand how to handle the starter correctly.
If the starter is not handled in accordance with this manual, serious accidents may occur.
Please also see each instruction manual for motor, crane unit and other related devices.

Also, please read the manual with referring delivered drawings (completion drawings finally) submitted seperately. The manual is arranged not to repeat contents in delivered drawings (completion drawings) as a rule.

⚠ WARNING

Careless use of the main switchboard (hereinafter called the product) may cause serious injury or death.
Operators and service staff are requested to fully read this manual before operating, checking and servicing the product.
Keep this manual near the product for easy reference by those who handle the product.

- **Do not use the product before fully understanding the contents of this manual.**
- **Keep this manual near the product, and read it repeatedly.**
- **If you transfer the product to another party, be sure to transfer this manual with the product to the new owner.**
- **If you lose or damage this manual, immediately order another copy from us or our dealer.**
- **Do not modify the product.**

Safety precautions are explained on pages (2) to (4).

2. Safety

For easy recognition of safety labels used in this instruction manual and the product, safety messages are selectively used as follows:

⚠WARNING

This mark is used 「when wrong handling can cause a dangerous state which is liable to result in severe injury or death.」

⚠ CAUTION

This mark is used 「when wrong handling can cause a dangerous state which is liable to result in moderate trouble or light injury, or physical damage only.」

Even areas marked 「! Caution」 may cause a serious result. Since all description are for important matters, be sure to observe them carefully.
Nobody can predict every danger for every operation, check and service in every environment. Therefore, the warnings stated in this manual and on the main switchboard do not cover all possible safety matters.
For any operation, check or service which uses a method not stated in this manual, the operation supervisor should assess the safety and take responsibility.

2.1 Cautions for safety

2.1.1 Cautions for safety during transportation

⚠ CAUTION

- Take care of loading and unloading, since danger is involved.
- When selecting the transport vehicle, take the weight of the product and the load capacity of the vehicle sufficiently into account.
- When loading and unloading, use the suspension holes of the product. Furthermore, considering a case where the product should drop or fall, keep an escape distance during work.
- When loading and unloading using a forklift, take care of the weight of the product and the stability of the product when liftd.
- After completion of loading, fasten the product firmly using wire ropes, fasteners, square bars, etc.
- After completion of loading, be sure to protect the product with a cover for preventing the deterioration of quality by rain and dust.

2.1.2 Cautions for safety during installation prior to operation

WARNING

Do not bring any fire close to the product. Before operation, confirm the place where an extinguisher is placed.
Any fire which is brought close to the product may inflame the protective covering, resin parts, etc.

⚠ CAUTION

This product must not be used under any other environmental conditions than specified. Otherwise, the burning of any part may cause a fire.

⚠ CAUTION

Before operation, refer to the connection diagram, to confirm there is no wrong wiring. Otherwise, a short-circuit may cause a fire.

⚠ CAUTION

Before operation, be sure to confirm whether the phase rotation is correct. Depending on the kinds of the loads, rotation in the wrong direction can cause an accident resulting in injury or death.

⚠ CAUTION

Before operation, confirm that the grounding resistance is higher than the required value. Otherwise, earth leakage may be caused to bring about an accident resulting in injury or death as the case may be.

2.1.3 Caution during energization

⚠ WARNING

Take care of an electric shock.
When checking the switchboard internally while it is energized, give the utmost care to stay away from energized parts.

2.1.4 Caution for modification

⚠ CAUTION

Do not modify the product.
Any modification made without our approval could cause a safety problem. Before modifying, consult us. We are not responsible for any accident resulting in injury or death or any trouble caused by the modification made without our approval.

2.1.5 Caution for protective devices

⚠ CAUTION

Do not change the values set in the protective devices.
The change of the value set in the protective device may cause a serious accident. If there is something wrong with any set value, please contact us. We are not responsible for any accident resulting in injury or death or any trouble caused by the change of any set value effected without our approval.

2.1.6 Cautions for check and maintenance

⚠ CAUTION

Before starting check and maintenance, keep the sections concerned informed of the work, and put up a caution sign. Otherwise, any unexpected feed from any one of apparatus installed nearby could cause an electric shock, etc.

⚠ CAUTION

For performing check and maintenance, switch off the power.
Furthermore, confirm the voltage using a voltage detector.
Even if all the power supplied in the switchboard are turned off, an outside power supply may be connected.

2.2 Safety label

2.2.1 Safety label for preventing electric shock

☐ Inside of panel

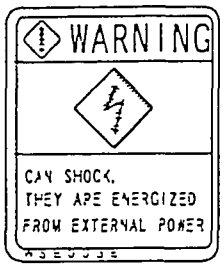

☐ Terminal

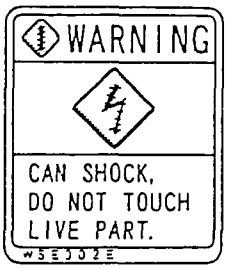

2.2.2 Safety label for megger and voltage withstand test

☐ Megger and
voltage withstand test

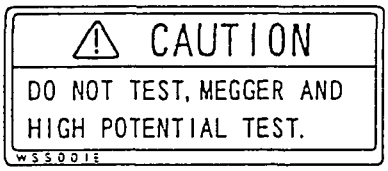

3. Outline of the product

3.1 Purpose of use

This product is a starter panel for marine use.

This manual is only concerned with the cases where this product is used for specified purposes. When the product is used for any purpose not referred to in this manual, the user shall be responsible for the safety.
Never operate or handle the product in any manner inhibited in this manual.

3.2 Features of the product

This product is a starter panel manufactured to conform to the ship's class standard.

It is equipped with the following main electric apparatus:

- Molded case circuit breakers (MCCBs) : For protection of feeder circuits.
- Meters : For monitoring of operation states
- Control switches : For control, operation and selection
- Indicator lamps : For indicating states
- Control relays : For sequence control
- Protective relays : For protection of motor.

4. Qualification of operators

The operators of this product must have the following qualification.
"Qualified marine engineer or a person appointed under the responsibility of the qualified marine engineer"

5. Identification items

If you have any question concerning this switchboard, please contact:
Quality Control Department, Controller Factory, Gunma Works,
Taiyo Electric Co., Ltd.

Model	: Starter
Machine number and type	: Marked on the name plate stating the ratings on the panel
Shipyard concerned	: It is written in the front cover.
Ship number	:
Date of delivery	: It is written in the rated nameplate on the panel.
Country of manufacture	: Japan
Address	: 726, Yattajima-cho, Isesaki City, Gunma Pref.
TEL	: 0270-32-1234
FAX	: 0270-31-2789

When you contact us, please state the model, shipyard, ship number and machine number.

6. Unloading, unpacking and storage

6.1 Unloading

⚠ WARNING

- For lifting the switchboard, use the suspension holes of the upper suspension angles, lest the switchboard should be strained.
- When letting the hooks of a crane catch the suspension holes, confirm that the hooks securely catch the holes.
  Accidental unhooking could cause a serious accident resulting in injury or death.
- Considering the switchboard should fall or drop, keep an escape distance.

⚠ WARNING

For mounting this product on a forklift, carefully take the weight of the product and the stability of the lifted product into consideration.
If the allowable load capacity of the forklift is exceeded or if the product is lifted in an unstable state, the product may drop to cause a serious accident resulting in injury or death.

- Let the hooks of a crane catch the suspension holes of the product, when unloading from the transport vehicle.
- If the product is packaged in a wooden frame, unload it from the transport vehicle using a forklift.

6.2 Unpacking (when packaged in a wooden frame)

(1) Unpack the wooden frame packaging the product as a whole.
(This is not necessary if no wooden frame is used for packaging.)
(2) Loosen and remove the bolts fixing the wooden leg beams to the product.

6.3 Caution for storage

⚠ CAUTION

- Store in such a way and at such a place as to prevent the ingress of dust, for preventing the deposition of impurities.
- Store to prevent the ingress of water, for preventing the deterioration of grounding.

- It is recommended to cover with a water-proof sheet and keep a proper amount of a moisture absorbent such as silica gel inside.

7. Installation

7.1 Installation work

> ⚠ CAUTION
>
> When letting the hooks of a crane catch the suspension holes, confirm that the hooks catch the holes positively.
> Accidental unhooking may cause a serious accident resulting in injury or death.

- Before installation, confirm whether respective portions are damaged.
  If any damaged portion is found, quickly let us or our dealer know it.
- Confirm whether any part is missing.
  If any part is missing, let us or our dealer know it.

> ⚠ CAUTION
>
> In the case of floor type, work the mount to prevent the ingress of water from the bottom.

> ⚠ CAUTION
>
> In the case of floor type, install a vibration damping stay between the top vibration damping hole and a structural reinforcing material of the hull.

> ⚠ CAUTION
>
> Install horizontally, since otherwise the switchboard performance may be adversely affected.

> ⚠ CAUTION
>
> Work the mount to prevent the switchboard from being strained, since otherwise the door operation may be adversely affected.

> ⚠ CAUTION
>
> Keep the inside of the switchboard away from the gas of welding, since otherwise soldered portions may be adversely affected.

- Plug the external cable introducing holes with putty, etc. to prevent small animals from entering inside.

⚠ CAUTION

Before connecting a DC power supply, confirm the polarity and voltage by a tester lest connection reversed in polarity should be effected, and connect the cable to the terminal block. If the voltage is not as specified or or reversed in polarity, the apparatus in the switchboard will be damaged.

- Firmly tighten the terminal screws of the cables connected from outside the switchboard, within a proper clamping torque range.

8. Operation

8.1 Check prior to operation

8.1.1 Installation states

(1) Confirm that the tie bolts of respective portions are tightened enough without being loose.
Any loose bolt can cause any part to drop due to vibration, resulting in an accident.

(2) Confirm that all the electric wires introduced from outside the switchboard have been connected.
Furthermore, confirm that the bolts and nuts of the terminal block are tightened enough without being loose.
Any loose bolt or nut can overheat the junction, to cause a fire.

(3) Confirm that the switchboard is internally free from any remaining tool, etc. and dust, etc. As required, clean.
Any remaining tool can cause a short-circuit, and dust, etc. can cause the grounding to be deteriorated.

(4) Confirm that the insulators are not contaminated or discolored.
A contaminated or discolored insulator suggests that it may be deteriorated.

⚠ WARNING

Remove all the fuses of the control circuit, and confirm that respective busbars do not conduct each other.
If busbars conduct each other, a short circuit will occur to cause a serious accident such as a fire or apparatus breaking.

⚠ CAUTION

Before operation, be sure to confirm that the phase rotation is correct.
Depending on the kinds of the loads, rotation in wrong direction can cause an accident resulting in injury or death.

⚠ CAUTION

Before operation, confirm that the grounding resistance is not lower than the required value, since otherwise earth leakage may be caused, to cause an accident resulting in injury or death as the case may be.

(5) Measure the grounding resistance by a DC 500 V megger.
Confirm that the measured value is more than about 1 M .

> **⚠ CAUTION**
>
> **Before measuring the insulation resistance of an electronic apparatus by a megger, be sure to remove its wires from the terminals, since otherwise the megger voltage may damage the apparatus.**

Every apparatus which does not allow megger test is provided with a caution plate for inhibition of megger.

8.2 Configuration

The respective panels are arranged in the following order from right to left when you face them.

For details, see the outline drawing of completion drawings.

(1) MCB handle
(2) Indicating lamp and operation switch

The starter panel is of dead front stand alone type.

8 3 Operation

WARNING

Before start of operation, let the persons in charge of surrounding machines and related machines confirm safety. Do not start operation before you obtain their confirmation of safety, since otherwise a serious accident may be caused.

Meanings of symbols
[***] refers to status indication and 「***」 refers to operation

8 3 1 OPERATION
8 3 1 1 Start

(1) Direct start
First turn disconnecting switch(89) or molded case circuit breaker(52) on
Next, push starting or running push button(3C)
By this operation magnetic coil of contactor(88) is energized closing magnetic contactor and starting motor On such starter that auto - start or - stop is actuated by pressure switch(63), float switch (33H, 33L) thermostat(23) etc change switch(43A) is generally provided

(2) Star-delta start
First turn disconnecting switch(89) or molded case circuit breaker(52) on
Next, push starting or running push button(3C)
By this start short-circuiting magnetic contactor(6) is energized
Then star magnetic contactor(88) starts operating and motor starts by star connection When sufficiently accelerated thereafter (6) is closed by delta changing timer(19T) causing closure of delta magnetic contactor(88-1) to complete starting operation

(3) Auto-transformer start
First turn disconnecting switch(89) or molded case circuit breaker(52) on
Next push starting or running push button(3C)
By this energized is auto-transformer neutral short-circuit magnetic contactor(6) then subsequently magnetic conactor(88-1) on primary side of auto-transformer starts operation applying set tap voltage to motor through auto-transformer thus starting motor
When sufficiently accelerated thereafter close(6) by changing timer(19T) from start to opreation then auto-transformer operates with reactor through(88-1) However opreating magnetic contactor(88-2) is immediately closed thus completing starting operation (88-1) is closed by the closure of (88-2)
Starting auto-transformer has short-time rating
Therefore if applied continuously the transformer may be burnt out
To prevent it a timer 48T is provided to stop operation unless starting is completed within predetermined time from entry of starting signal

(4)Reversible operation

First turn disconnecting switch(89) or molded case circuit breaker(52) on, push forward operation push button, then forward operation magnetic contactor(88F) is energized for closure and motor operates in forward direction

Next, push reverse operation push button, then reverse operation magnetic contactor(88R) is energized for closure and motor operates in reverse direction

In case of changing operation from forward to reverse or reverse to forward once push stop push button to stop motor then change it, because interlock is provided

8 3 1 2 Stop

(1)When pushing stop push button

By pushing stop push button(3-0), coil of magnetic contactor(88) is de-energized causing magnetic contactor opening and motor stop

In case that manual-auto change switch is provided, securely change it once to manual side, then push stop push button

(2)Overload stop

When overload current flows on motor circuit overload relay(51) operates to open magnetic contactor(88), causing motor stop

Overload relay is set at rated current When overload relay is operated by overcurrent, reset button jumps out Therefore for restast check motor then push reset button before starting

Applied overload relay is thermal relay

(3)Power supply interruption

In case of power supply interruption all power supplies are interrupted Therefore open magnetic contactor to stop motor

When power supply recovers from interruption one type(UVP) needs to push starting button for restart and the other type(UVR) does not need it because of automatic operation start

(4)Terminology

4-1 Undervoltage protection(UVP)

When undervoltage occurs, motor circuit is automatically opened Even when voltage recovers thereafter motor does not restart again on that condition

4-2 Undervoltage release(UVR)

For important auxiliary machines motor circuit is automatically opened when undervoltage occurs when voltage recovers thereafter the motor as operating before undervoltage condition starts automatically again without pushing starting push button Sequentially starting timer (10T) is provided depending on the application

8 3.1 3 Time adjustment of a timer

Perform a time setting by dip switch according to the following table while checking a timer indication on the printed circuit board

SIC printed circuit board timer

Location of each switch
EX In order to set 5 sec., set switches of 1 and 3 to ON

2-1T, 2-2T, 63T, 3CT, 3-0T, 10T

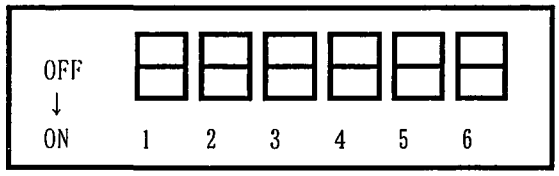

19T

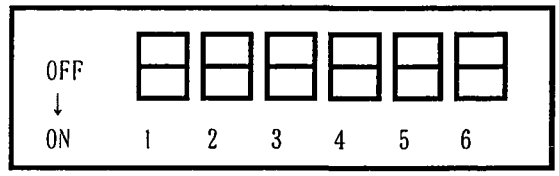

Combination of switches for each time

Timer's type and time		Dip switch no	Timer's type and time		Dip switch no
1 minute timer (sec)	10 minute timer (min sec)	0 means ON 1 2 3 4 5 6	1 minute timer (sec)	10 minute timer (min sec)	0 means ON 1 2 3 4 5 6
0	0	- - - - - -	32	5 20	- - - - - 0
1	0 10	0 - - - - -	33	5 30	0 - - - - 0
2	0 20	- 0 - - - -	34	5 40	- 0 - - - 0
3	0 30	0 0 - - - -	35	5 50	0 0 - - - 0
4	0 40	- - 0 - - -	36	6 00	- - 0 - - 0
5	0 50	0 - 0 - - -	37	6 10	0 - 0 - - 0
6	1 00	- 0 0 - - -	38	6 20	- 0 0 - - 0
7	1 10	0 0 0 - - -	39	6 30	0 0 0 - - 0
8	1 20	- - - 0 - -	10	6 40	- - - 0 - 0
9	1 30	0 - - 0 - -	11	6 50	0 - - 0 - 0
10	1 40	- 0 - 0 - -	12	7 00	- 0 - 0 - 0
11	1 50	0 0 - 0 - -	13	7 10	0 0 - 0 - 0
12	2 00	- - 0 0 - -	11	7 20	- - 0 0 - 0
13	2 10	0 - 0 0 - -	15	7 30	0 - 0 0 - 0
11	2 20	- 0 0 0 - -	16	7 10	- 0 0 0 - 0
15	2 30	0 0 0 0 - -	17	7 50	0 0 0 0 - 0
16	2 10	- - - - 0 -	18	8 00	- - - - 0 0
17	2 50	0 - - - 0 -	19	8 10	0 - - - 0 0
18	3 00	- 0 - - 0 -	50	8 20	- 0 - - 0 0
19	3 10	0 0 - - 0 -	51	8 30	0 0 - - 0 0
20	3 20	- - 0 - 0 -	52	8 10	- - 0 - 0 0
21	3 30	0 - 0 - 0 -	53	8 50	0 - 0 - 0 0
22	3 10	- 0 0 - 0 -	51	9 00	- 0 0 - 0 0
23	3 50	0 0 0 - 0 -	55	9 10	0 0 0 - 0 0
21	1 00	- - - 0 0 -	56	9 20	- - - 0 0 0
25	1 10	0 - - 0 0 -	57	9 30	0 - - 0 0 0
26	1 20	- 0 - 0 0 -	58	9 10	0 - 0 0 0
27	1 30	0 0 - 0 0	59	9 50	0 0 - 0 0 0
28	1 10	- - 0 0 0 -	60	10 00	- - 0 0 0 0
29	1 50	0 - 0 0 0 -	61	10 10	0 0 0 0 0
30	5 00	0 0 0 0	62	10 20	0 0 0 0 0 0
31	5 10	0 0 0 0 0	63	10 30	0 0 0 0 0 0

8.3.1.4 Internal circuit of printed circuit board

①EF1, EF2: Power fuse
(1) A white reset bar is in the center of the fuse .
(2) When the fuse is tripped, the white reset bar is jumped out.
(3) Push the bar to reset the fuse.

②19T:Star-delta change over timer (Max. 60 sec.)
A motor is started by star connection and changed over to △ connection (running) after 5 sec.

③2-1T:PS start up protection timer (Max. 60 sec.)

④2-2T:Stand-by start parallel running timer (Max. 60 sec.)
A stand-by motor is running in parallel with a lead motor and changed to single running after 5 sec.

⑤63T:PS, FS chattering protection timer (Max. 60 sec.)
A failed action by rolling, pitching of ship, etc. is prevented.

⑥3CT:PS, FS chattering protection timer (Max. 60 sec.)
A failed action by rolling, pitching of ship, etc. is prevented.

⑦3-0T:PS, FS chattering protection timer (Max. 60 sec.)
A failed action by rolling, pitching of ship, etc. is prevented.

9. Check and maintenance

> ⚠ CAUTION
>
> Keep the other sections concerned informed of your check and maintenance, and put up a caution sign before you start the work, since otherwise the feed from any of the surrounding apparatus could cause an electric shock, etc.

> ⚠ CAUTION
>
> Before performing check and maintenance, switch off the power.
> Confirm the voltage using a voltage detector, since a power may be supplied from outside even after all the power supplies in the switchboard have been turned off.

> ⚠ CAUTION
>
> If the user repairs or modifies, he is expected to keep the action recorded or revise the drawings concerned, and preserve the record or revised drawings for a long time.

- If any check or repair not specified in this instruction manual becomes necessary, immediately contact the maker stated in Section 5 "Identification items".
- For exchange parts, see the spare parts list in the attached completion drawings. For supply of spare parts and other parts than spare parts, contact the maker stated in Section 5 "Identification items".

9.1 Purpose of check and maintenance

The purpose of check and maintenance is to sustain the functions of the switchboard for enhancing the availability factor of equipment. External factors which inhibit the sustainment of functions include the mechanical and electrical factors of the switchboard and apparatus, environmental factors, human factors, etc.
It is necessary to monitor these factors, for making appropriate service and taking appropriate corrective measures.

For the sustainment of switchboard functions, pay attention to the following matters.

(1) To sustain the functions of the switchboard for a long time, environmental conditions (temperature, humidity, corrosive gas, dust, vibration, damage due to salt, etc.) and operation conditions (voltage variation, load variation, action frequencies of apparatus, etc.) are important factors.

(2) With the lapse of years of switchboard operation, environmental conditions and operation conditions may be changed for such reasons as the extension and movement of related apparatus.
In such a case, the check and maintenance periods and items, etc. must be appropriately changed, and as the case may be, it may be necessary to consider the modification of the switchboard in response to the change of any condition.

(3) It is desirable that the check and maintenance of related apparatus installed outside the switchboard such as main circuit cable, control circuit cable and limit switches is performed simultaneously with the check and maintenance of the switchboard.

9.2 Classification of check and maintenance

To prevent the accidents of the switchboard and sustain the functions of the switchboard, systematic check and maintenance work is necessary.
Check and maintenance work is generally classified as follows:

(1) Routine check
(2) Periodical check
(3) Temporary check

9.2.1 Routine check

This check is performed routinely to sustain the functions of the switchboard. Before, during and after operation, the switchboard is observed from outside and, as the case may be, by opening the door, mainly using the five senses to find out any discoloration, abnormal noise, abnormal odor, heat generation, ingress of rain water, etc. This is done when the equipment as a whole is generally inspected.
The check frequency is not less than once a day in principle.

9.2.2 Periodical check

This check is performed systematically to confirm and sustain the functions of the switchboard. Apparatus is stopped to confirm whether there is any failure, and as required, overhauled. The check frequency is recommended to be desirably once per 6 months to not less than once a year.

9.2.3 Temporary check

When any special state occurs, a temporary check is performed to confirm that the switchboard has restored its normal state or has become normal. If any detailed check becomes necessary due to any failure found by routine check or periodical check or any accident (short-circuit or fire), or in any season with a weather condition unpreferable for the switchboard (typhoon, rainy season, heavy snow, high temperature, snowfall season, etc.), a temporary check is performed by stopping apparatus, to confirm whether any failure occurs, and as required, apparatus are overhauled.

Remarks 1. The frequency of periodical check is expected to be decided for each working site in reference to the frequency specified in this guideline, considering the environmental conditions and operation conditions of apparatus, and the importance and operation years of the equipment.
2. Even if the check and maintenance work is commissioned to any contractor, the work should be performed without fail under the guidance of the main engineer in charge of the equipment in principle.

9.3 Safe work

9.3.1 Basic matters for safe work

The basic matters for securing the safety of check and maintenance workers are letting them master the knowledge concerning the configuration and operation of apparatus, establishing an organization for safety, systematically effecting the work and being careful about the safety of workers.

9.3.2 General matters for safe work

(1) Carefully thought-out pre-arrangement ····· First aid methods, orderly arrangement of working environment, confirmation of safety of equipment and apparatus

(2) Examination in reference to circuit diagram ····· Intricacy of power supply system, confirmation of various power supplies in the switchboard, existence of circuit breakers and primary hot lines, confirmation of earth wire

(3) Liaison ····· Keeping the other sections concerned informed of details

(4) Confirmation of voltages ····· Confirmation of voltages of apparatus using voltage detector, discharge of residual charges from exposed live parts for protection

(5) Prevention of wrong operation ····· Locks of power supplies, caution signs

(6) Protectors for grounding ····· Pre-arrangement, periodical check

9.4 Recording of check and maintenance

The essential points and trouble conditions found in the routine check, periodical check and temporary check should be recorded and compiled, and it is desired that such records are preserved for a long period of time, since they can be useful data for rational check and maintenance and for subsequent service and improvements.

The check list is expected to be prepared by the user in reference to the check list attached as Section 11.

9.5 What are to be checked and maintained

9.5.1 General notes

Main general notes for check and maintenance work are listed below.

Table 1 General notes for check and maintenance work

Check and maintenance work	Notes
Cleaning	Cleaning is a basic action of check and maintenance work since it can prevent the deterioration of grounding and the rusting of parts, and allows detailed check and maintenance of respective portions. (1) When air is used, suction type is recommended. In the case of discharge type, give care to the humidity and pressure of air. (2) Before opening doors, covers, etc. remove the dust and foreign matters deposited on the tops of the respective housings. (3) For sweeping grounding material, sweep in the direction to cross the live parts. (4) For the cloth used for cleaning, take care of its chemical neutrality, fraying of fibers and humidity.
Re-tightening	A contact failure at a junction can cause overheat which may result in a fire or fuse blowing, etc. (1) In periodical check, it is desirable to re-tighten in the main circuit and others. (2) In a heavily vibrating place or in a case of operation under severe heat cycles, the check and maintenance should be effected more frequently.
Maintenance of grounding material	(1) Ceramic grounding material should be visually observed to find any contamination or deposition of foreign matters. (2) For synthetic resin laminate boards, timber, etc., give care to the loosening of screws caused by their seasoning. (3) The grounding resistance should be measured for every distinguishable circuit. (For measurement by a grounding resistance meter, electronic apparatus and semiconductor products, etc. should have their circuits short-circuited.) (4) For measurement of grounding resistance, temperature and humidity also should be measured and recorded. (5) Compare grounding resistance values in time series, and when there is a decreasing tendency, examine the cause.

Check and maintenance work	Notes
Rusting and paint peeling	(1)For moving parts such as doors and drawing mechanisms, confirm their smooth movement. (2)Give care especially to the portions threatening to be lowered in mechanical strength by rust, such as springs and welded zones. (3)Give care to portions threatening to impair good appearance due to rusting and paint peeling. (4)If rusting or paint peeling has occurred outdoors or in any other severe conditions, repair or re-paint as early as possible.
Exchange of parts	(1)When exchanging a part, positively confirm the type and function. (2)When exchanging a part, do not make wrong connection or do not forget tightening any screw. (3)If an exchanged part requires adjusted setting, positively adjust and set after completion of exchange. (4)Soldering is allowed to be done by a skilled worker only.
Others	(1)Sufficiently confirm the action of the emergency shutdown circuit at the time of periodical check. (2)On rainy and windy days, especially carefully inspect to identify the phenomena which could not occur usually. (3)If construction work is effected near the switchboard, give care to the loosening of screws, the deposition of dust, the damage to and mal-function of apparatus due to vibration, etc., and let the construction supervisor know where cables are buried to avoid any damage to them. (4)Take appropriate measures against small animals. (5)After completion of maintenance work, ensure that temporary works such as earth circuit have been removed, that every screw has been tightened and that no tool or part is left.

9 5 2 Check and maintenance items

Main check and maintenance items are listed below.

Table 2 Check and maintenance items

*1 Routine check
*2 Periodical check
*3 Temporary check

Place of check	Check item	R *1	P *2	T *3	Check method	Criterion	Action or correction
Casings and outside in general (doors and housings)	Loosening of clinch cover attaching bolts		○		Visual sense retightening	To be free from loosening	Re-tighten
	Loosening of attaching bolts for hinges and handles						
	Damage to hinged portions of doors		○		Visual sense	To be free from damage	Repair
	Deterioration peeling and damage of packings						Exchange for a substitute
	Vibration noise due to loose bolts	○			Auditory sense	To be free from abnormal noise	Re-tighten
	Inclination of switchboard and deformation of structure due to land subsidence etc		○		Visual sense	To be free from deformation	Correct the deformation
	Deposition of dust		○			To be free from contamination	Clean
	Mark of harmful ingress of rain water	○	○			To be free from the mark of rain water ingress	Treat to be water-proof
	Mark of harmful dew condensation	○	○			To be free from the mark of dew condensation	In case of harmful dew condensation install an additional space heater
	Overheat of housing	○			Touch sense	To be free from overheat	Examine and correct the heat source
	Rusting of moving parts and sliding parts		○		Visual sense	To be free from rusting	Repair or re-paint
	Paint peeling on the surface and back of housing					To be free from paint peeling	
Signs such as nameplates	Loosening coming-off breaking and warping		○		Visual sense	Markings to be legible	Exchange the part concerned
	Illegibility of characters due to dust deposition or contamination		○				
Busbars in general	Loosening of attaching bolts		○		Visual sense retightening	To be free from loosening	Re-tighten
	Cracking breaking and deformation of cramps, etc		○		Visual sense	To be free from damage	Exchange the part concerned
	Vibration noise due to loose bolts	○			Auditory sense	To be free from abnormal noise	Re-tighten
	Abnormal odor due to overheat of busbar etc	○			Olfactory sense	To be free from abnormal odor	Examine and eliminate the cause of overheat
	Discoloration due to overheat of busbar		○		Visual sense	To be free from discoloration	Examine and eliminate the cause of overheat

Table 2 (continued)

Place of check	Check item	R *1	P *2	T *3	Check method	Criterion	Action of correction
Busbar hangers and saddles	Cracking, creaking and deformation of insulators		○		Visual sense	To be free from damage	Exchange the part concerned
	Abnormal odor due to overheat of insulators etc	○			Olfactory sense	To be free from abnormal odor	Exchange the part concerned
	Discoloration due to overheat of grounding material etc		○		Visual sense	To be free from discoloration	Exchange the part concerned
	Deposition of foreign matters and dust		○			To be free from contamination	Clean or exchange the part
Leading portions to and from main circuits cable terminals and junctions	Loosening of bolts at junctions etc		○		Visual sense	To be free from loosening	Re-tighten
	Vibration noise due to loose bolts etc	○			Auditory sense	To be free from abnormal noise	Re-tighten
	Abnormal odor due to overheat of junctions etc	○			Olfactory sense	To be free from abnormal odor	Re-tighten
	Discoloration due to overheat of junctions and grounding material		○		Visual sense	To be free from discoloration	Exchange the part concerned
Cable through portions	Loosening of closing plate attaching bolts		○		Visual sense retightening	To be free from loosening	Re-tighten
	Damage to cable sheaths by closing plates						
	Coming-off and cracking of closing putty		○		Visual sense	To be free from damage	Repair
	Mark of harmful ingress of rain water	○	○			To be free from the mark of rain water ingress	Treat to be water-proof
	Mark of entry of small animals	○	○		Visual sense	To be free from the mark of small animal entry	Protect the sheath
Cables in general	Loosening of bolts at junctions etc		○		Visual sense retightening	To be free from loosening	Re-tighten
	Damage to the coverings of cables crossing over moving parts etc					Covering not to be damaged	Exchange the wire concerned
	Damage to the cable coverings by cable hangers and saddles etc		○		Visual sense	Covering not to be damaged	Exchange the wire concerned
	Discoloration due to the overheat of grounding material etc		○			To be free from discoloration	Exchange the part concerned
	Vibration noise due to the loosening of bolts etc	○			Visual sense Auditory sence	To be free from abnormal noise	Re-tighten
	Abnormal odor due to the overheat of cables etc	○			Olfactory sense	To be free from abnormal odor	Exchange the wire concerned
Cable hangers and saddles	Damage to cable ducts cable bands and cleats due to overheat etc		○			To be free from damage	Exchange the part concerned
Wire marks	Deformation and coming-off due to overheat and temporal deterioration etc		○		Visual sense	To be free from deformation and coming-off	Exchange the part concerned
	Illegibility of characters due to dust deposition etc		○			Characters to be legible	Exchange the part concerned

Table 2 (continued)

Place of check	Check item	R *1	P *2	T *3	Check method	Criterion	Action or correction
Earth terminal earth wire and earth busbar	Loosening of bolts at junctions		○		Visual sense retightening	To be free from loosening	Re-tighten
	Corrosion and breaking of earth wire		○		Visual sense	Conduction to be confirmed by tester	Exchange the wire concerned
Earth resistance	Lower than the specified value		○		DC500V megger	1 MΩ or more (main circuit)	Clean, dry and exchange the part concerned
External terminal block in general	Loosening of bolts at junctions		○		Visual sense retightening	To be free from loosening	Re-tighten
	Cracking and breaking of grounding material etc		○		Visual sense	To be free from damage	Exchange the part concerned
	Discoloration by overheat etc		○			To be free from discoloration	Exchange the part concerned
	Deposition of foreign matters and dust		○			To be free from contamination	Clean
External cable connectors	Loosening of plug fixing bolts coupling nuts cable cramps etc		○		Visual sense	To be free from loosening	Re-tighten
	Cracking and breaking of grounding material etc		○			To be free from damage	Exchange the part concerned
	Ingress and deposition of foreign matters and dust		○			To be free from contamination by foreign matters and dust	Clean
	Discoloration by overheat etc		○			To be free from discoloration	Exchange the part concerned
	Rusting of moving parts		○			To be free from rusting	Exchange the part concerned
Cooling fans	Abnormal operating state	○			Visual sense	Exhaust to be normal	Exchange the part concerned
	Deposition of foreign matters and dust onto fans, etc		○			To be free from deposition of foreign matters and dust	Clean
Filters	Contamination clogging and deposition of foreign matters	○	○			To be free from deposition of foreign matters and dust	Clean
Internal illuminating light	Reliable flashing		○			Lighting to be normal	Exchange the part concerned
Plug sockets	Cracking and breaking of grounding material etc		○			To be free from damage	Exchange the part concerned

10. Troubleshooting

If any trouble occurs in the switchboard, it can be corrected to a normal state by adjusting, exchanging and repairing according to the following procedure.
If the normal state cannot be restored, contact us or our dealer.

No.	Trouble condition	Possible cause	Correction
1	An indicator lamp does not light on.	Pre-arrange a tester. 1. The bulb has burned out. 2. The fuse of indicator lamp circuit has blown. 3. The socket of indicator lamp is defective. 4. The switch of related circuit is defective. 5. The relay of related circuit is defective. 6. The related circuit fails in contact at the junction. 7. A cable of related circuit breaks.	1. Exchange the bulb for a new one. 2. Exchange the fuse for a new one. 3. Exchange the socket for a new one. 4. Exchange the switch for a new one. 5. Exchange the relay for a new one. 6. Re-tighten at the junction. 7. Exchange the cable for a new one.
2	Electirc-magnet contactor is not operated by pushing a start PB.	1. Contact failure of start PB. 2. Fuses of related circuits have blown. 3. Tripping of overload relay. 4. Electric-magnet contactor failure.	1. Exchange or repair. 2. Check the cause of blow. Then, reset or repair. 3. Clear the cause of overload. 4. Exchange or repair.
3	A meter does not work by closing electric-magnet contactor.	1. Motor power source voltage is low. 2. Motor failure. 3. Emergency stop PB is pushed.	1. Check if motor terminal voltage is a proper value. 2. Refer to the instruction manual of motor. 3. Confirm a safety. Then, reset PB.
4	A molded case circuit breaker cannot be turned on.	1. Circuit breaker failure.	1. Exchange it for a new one.
5	Fuse blows as soon as it is exchanged.	1. Temperature in the panel is raised abnormally. 2. The circuit is short-circuited.	1. Open the door and cool it. 2. Check the short-circuited portion and exchange it for a new one.
6	A molded case circuit breaker trips.	1. Rush current occurs when changing over from start to running. 2. Main circuit is short-circuited.	1. Measure power source voltage and check if the value is normal. 2. Check the short-circuited portion and exchange it for a new one.

11. Check list

Name of apparatus			Date of check		Weather	Air temp ℃ / Humidity %	Checked by

Classification	No	Place of check	Item	Result		Action
				Good	No good	
1. Casing	1	Outside in general (door and housing)	Looseness			
			Damage			
			Abnormal noise			
			Deformation			
			Contamination			
			Ingress of rain water			
			Dew condensation			
			Overheat			
			Rusting			
	2	Signs such as name plate	Damage			
			Contamination			
2. Busbars and busbar hangers and saddles	3	Busbars in general	Looseness			
			Damage			
			Abnormal noise			
			Abnormal odor			
			Discoloration			
	4	Busbar hangers and saddles	Damage			
			Abnormal odor			
			Discoloration			
			Contamination			
3. Leading portion to and from main circuit	5	Cable terminals and junction	Looseness			
			Abnormal noise			
			Abnormal odor			
			Discoloration			
	6	Cable through portion	Looseness			
			Damage			
			Ingress of rain water			
			Entry of small animals			

(Continued)

Classifi-cation	No.	Place of check	Item	Result: Good	Result: No good	Action
4 Wiring	7	Cables in general	Looseness			
			Damage			
			Discoloration			
			Abnormal noise			
			Abnormal odor			
	8	Cable hanger and saddles	Damage			
	9	Wire mark	Damage			
			Contamination			
5 Earth	10	Earth terminal Earth wire Earth busbar	Looseness			
			Damage			
	11	Earth resistance	Maintenance			
6 Terminal block	12	Outside in general	Looseness			
			Damage			
			Discoloration			
			Contamination			
7 External cable connec-tors	13	Connectors in general	Looseness			
			Damage			
			Contamination			
			Discoloration			
			Rusting			
8 Accesso-ries	14	Cooling fan	Action			
			Contamination			
	15	Filter	Contamination			
	16	Internal illuminating light	Action			
	17	Plug sockets	Damage			
9 Internal accesso-ries	18	Various handle Duplicate keys Test plug Control jumper Special tools Test box Others	Damage			
			Quantity			
			Item			

SIC Type – STARTER MODULE

- General

SIC type is STARTER module, which is configured by PCB (Printed Circuit Board) control circuit. The PCB is installed miniature relay, timer, push button, indication lamp and so on.

- Feature

1. SIC is integrated module which is installed PCB control circuit, amp meter, transformer, changeover switch and so on at standardized mold unit. STARTER panel can be designed more simple and down sizing by using SIC.
2. SIC is using reliable relay logic circuit on PCB.
3. SIC is integrating and standardizing STARTER control circuit on PCB. The quality is high and reliable.
4. SIC is maintenance free by using PCB control circuit of STARTER.
5. SIC has serial communication function as option.

- Outline

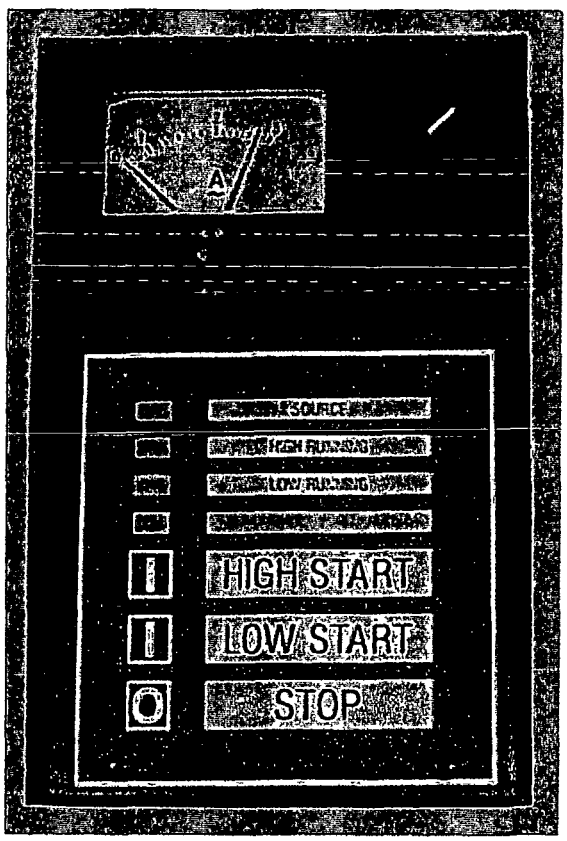

< Front view >

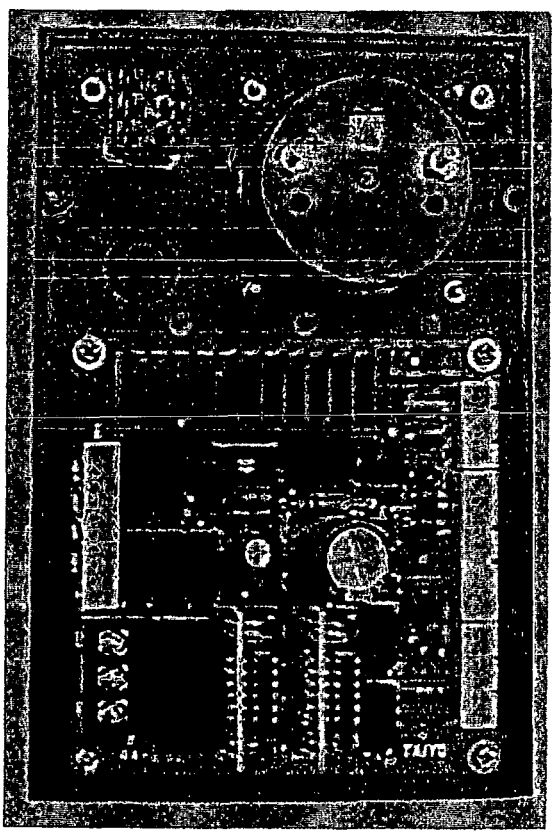

< Rear view >

Dimension : 112mm(W) x 180mm(H) x max. 100mm(D)

- SIC type

Type	Specification	Remarks
SIC－101	Auto Start & Stop（UVR）	Draw.No. SIC－101(PS x 1) Draw.No. SIC－101(PS x 2)
SIC－102	Auto Start & Stop（UVP）	Draw.No. SIC－102(PS x 1) Draw.No. SIC－102(PS x 2)
SIC－111	Manual Start & Stop（UVR）	Draw.No. SIC－111
SIC－103	Manual Start & Stop（UVP）	Draw.No. SIC－103
SIC－141	Auto Changeover（UVR）	Draw.No. SIC－141(NV) Draw.No. SIC－141(NV+PS)
SIC－142	Auto Changeover（UVP）	Draw.No. SIC－142(NV) Draw.No. SIC－142(NV+PS)
SIC－107	Reversible（UVR）	Draw.No. SIC－107
SIC－105	Reversible（UVP）	Draw.No. SIC－105
SIC－YO1	Open Star-Delta	
SIC－YC1	Closed Star-Delta	
SIC－AT1	Compensation	
SIC－PF1	Purifier	
SIC－101／PLC	Auto Start & Stop(UVR) and Auto Changeover（UVR） Serial Comm. Function（option）	Draw.No. SIC－101/PLC(NV+PS)

< Appendix >

SIC ： Starter Integrated Circuit

UVR ： Under Voltage Release

UVP ： Under Voltage Protection

PS ： Pressure Switch

NV ： No Voltage

PLC ： Programmable Controller (option ： with serial communication)

- Block Diagram and Connection Diagram

SIC－101、SIC－101/PLC、SIC－102、SIC－103、SIC－105、SIC－107

SIC－111、SIC－141、SIC－142

SAMPLE PICTURE

MENU PICTURE (P31)

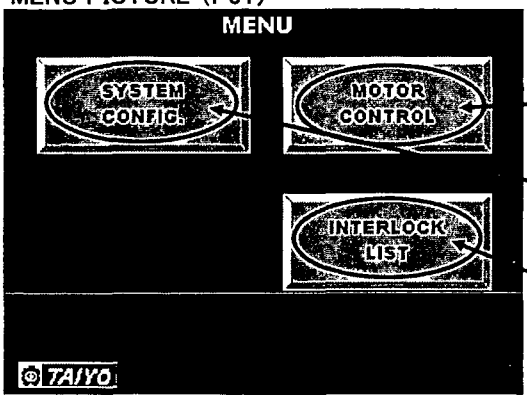

Move to "MOTOR CONTROL" Picture.

Move to "PASSWORD INPUT" Picture.

Move to "INTERLOCK LIST" Picture.

MOTOR CONTROL PICTURE (P32)
< NOT ACTIVE >

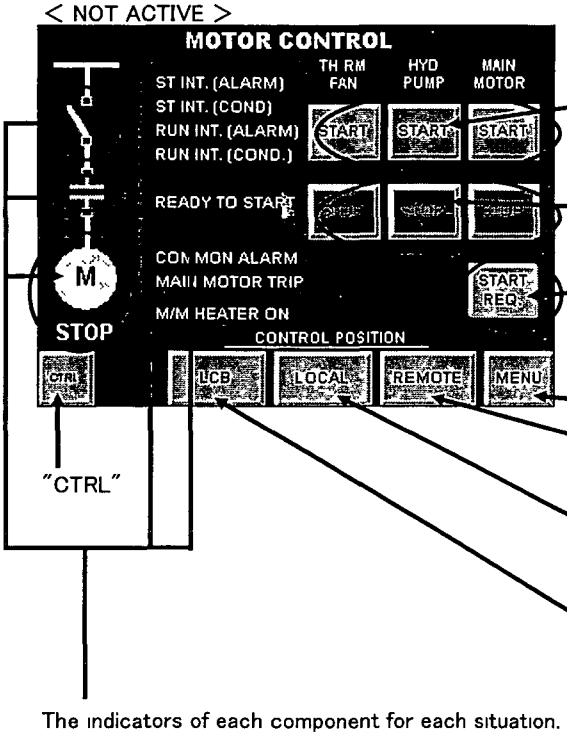

*) This picture indicats, when power on.

Start button & Running indicator for "MAIN MOTOR","HYD PUMP","FAN" (Operate with pushing "CTRL")

Stop button for "MAIN MOTOR","HYD PUMP","FAN" (Operate with pushing "CTRL")

The button for "MAIN MOTOR START REQUEST" It will flicker, when requesting. (Operate with pushing "CTRL")

Move to "MENU" Picture.

To select control position Select "REMOTE CONTROL POSITION" (Operate with pushing "CTRL")

To select control position Select "LOCAL CONTROL POSITION" (Operate with pushing "CTRL")

To select control position Select "LCB CONTROL POSITION" (Operate with pushing "CTRL")

The indicators of each component for each situation.

MOTOR CONTROL PICTURE (P32)
< ACTIVE >

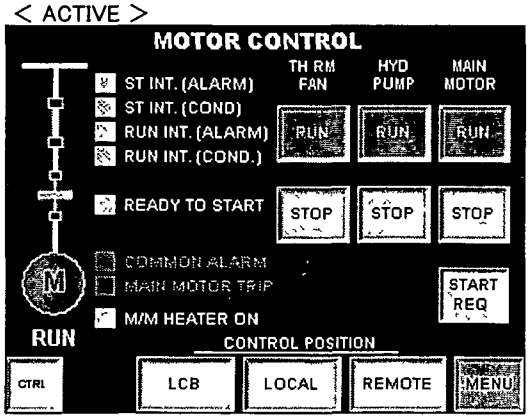

①:"ST INT (ALARM)"
Light on when all input channels (0000~0007) are normal.
②:"ST INT (COND)"
Light on when all input channels (0008~0015) fulfill conditions
③:"RUN INT (ALARM)"
Light on when all input channels (0100~0107) are normal.
④:"RUN INT (COND)"
Light on when all input channels (0108~0115) fulfill conditions.
"READY TO START"
Light on when above all inputs (①~④) are normal & filfull conditions.
Light off when main motor run.
"COMMON ALARM"
Light on even one of above inputs (① & ③) becomes abnormal.
"MAIN MOTOR TRIP"
Light on even one of above inputs (③ & ④) becomes not filfull condition.
And main motor will be tripped.
"M/M HEATER ON"
Light on when "MAIN MOTOR SPACE HEATER" activated.

PASSWORD INPUT PICTURE (P0)

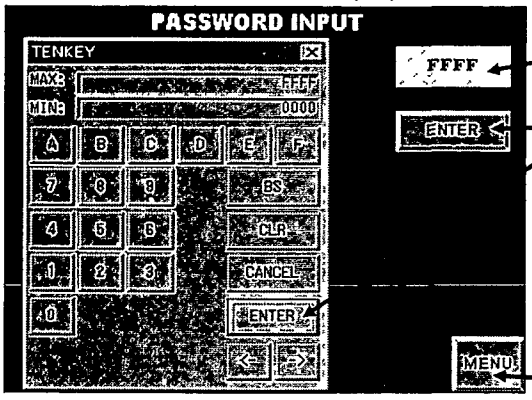

Touch here for indicating key-pad at left side.

Enter the "PASSWORD" and push "ENTER" on key -pad.
After that, push this "ENTER" then move to
"SYSTEM CONFIG" Picture if PASSWORD is correct.
In case wrong PASSWORD, Picture doesn't move to
"SYSTEM CONFIG" Picture

Move to "MENU" Picture.

SYSTEM CONFIG. PICTURE (P1)

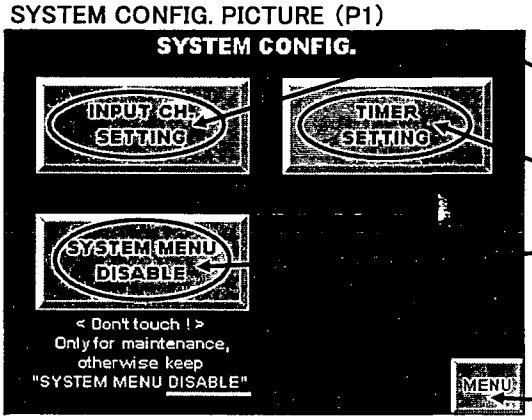

Move to "INPUT CHANNEL SETTING" Picture.

Move to "COMMAND TIMER SETTING" Picture.

Don't touch this. Only service engineer can touch this.
Keep "SYSTEM MENU DISABLE"

Move to "MENU" Picture.

INPUT CHANNEL SETTING PICTURE (P2)

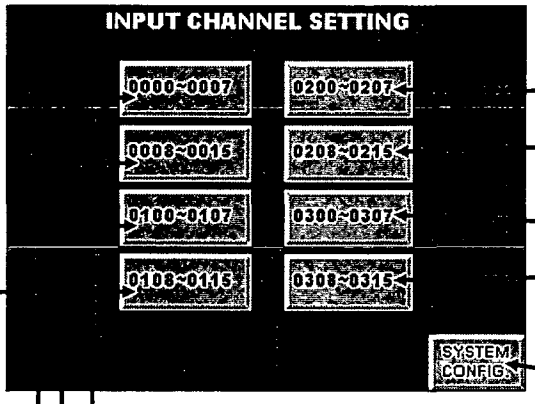

Move to "INPUT CHANNEL SETTING (0200~0207)" Picture.

Move to "INPUT CHANNEL SETTING (0208~0215)" Picture.

Move to "INPUT CHANNEL SETTING (0300~0307)" Picture.

Move to "INPUT CHANNEL SETTING (0308~0315)" Picture.

Move to "SYSTEM CONFIG" Picture.

Move to "INPUT CHANNEL SETTING (0000~0007)" Picture.

Move to "INPUT CHANNEL SETTING (0008~0015)" Picture.

Move to "INPUT CHANNEL SETTING (0100~0107)" Picture.

Move to "INPUT CHANNEL SETTING (0108~0115)" Picture.

INPUT CHANNEL SETTING (0000~0007) PICTURE (P3)

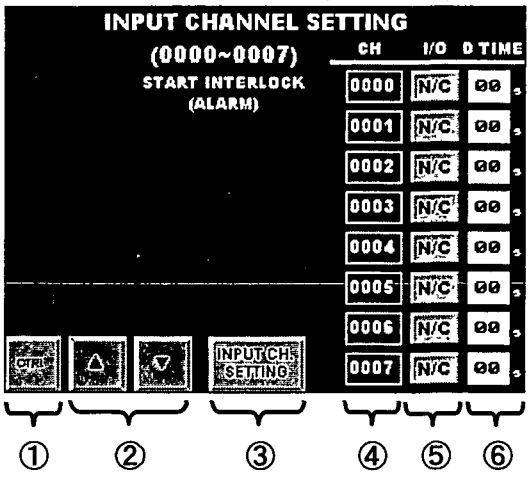

①: "CTRL"

②: Move to next or previous Picture.

③: Move to "INPUT CHANNEL SETTING" Picture.

④: Input channel No.

⑤: Select input signal (N/C ⇔ N/O) with pushing "CTRL"

⑥: Touch for indicating key-pad at left side.
Set delay time for each input channel with key-pad and push "ENTER" on key-pad.

INPUT CHANNEL SETTING (0000~0007) PICTURE (P3)
< KEY-PAD APPEARS >

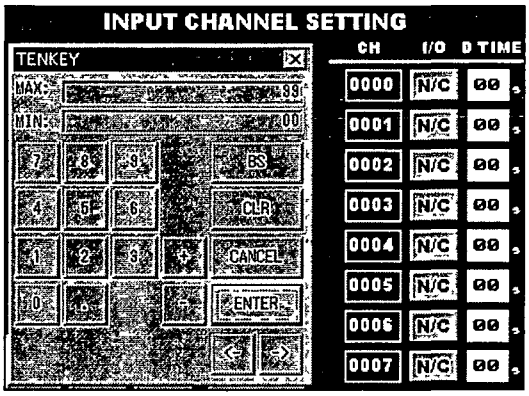

INPUT CHANNEL SETTING (0008~0015) PICTURE (P4)

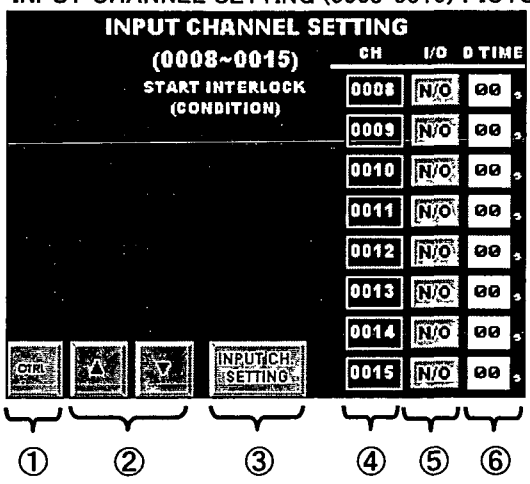

①: "CTRL"

②: Move to next or previous Picture.

③: Move to "INPUT CHANNEL SETTING" Picture.

④: Input channel No.

⑤: Select input signal (N/C ⇔ N/O) with pushing "CTRL"

⑥: Touch for indicating key-pad at left side.
Set delay time for each input channel with key-pad and push "ENTER" on key-pad.

INPUT CHANNEL SETTING (0100~0107) PICTURE (P5)

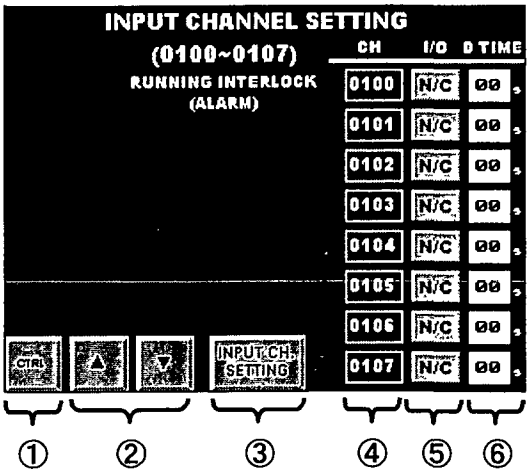

①: "CTRL"

②: Move to next or previous Picture.

③: Move to "INPUT CHANNEL SETTING" Picture.

④: Input channel No.

⑤: Select input signal (N/C ⇔ N/O) with pushing "CTRL"

⑥: Touch for indicating key-pad at left side.
Set delay time for each input channel with key-pad and push "ENTER" on key-pad.

INPUT CHANNEL SETTING (0108~0115) PICTURE (P6)

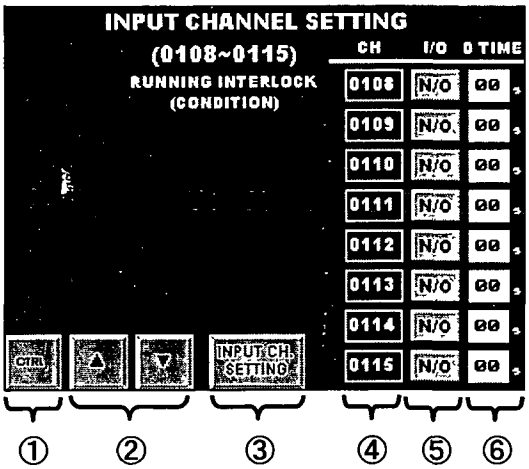

①: "CTRL"

②: Move to next or previous Picture.

③: Move to "INPUT CHANNEL SETTING" Picture.

④: Input channel No.

⑤: Select input signal (N/C ⇔ N/O) with pushing "CTRL"

⑥: Touch for indicating key-pad at left side.
Set delay time for each input channel with key-pad and push "ENTER" on key-pad.

INPUT CHANNEL SETTING (0200~0207) PICTURE (P7)

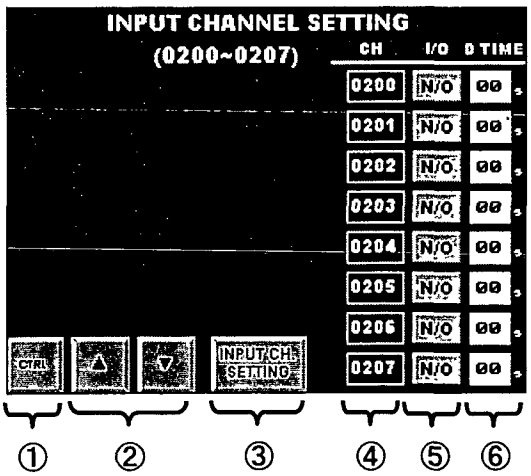

①: "CTRL"

②: Move to next or previous Picture.

③: Move to "INPUT CHANNEL SETTING" Picture.

④: Input channel No.

⑤: Select input signal (N/C ⇔ N/O) with pushing "CTRL"

⑥: Touch for indicating key-pad at left side.
Set delay time for each input channel with key-pad and push "ENTER" on key-pad.

INPUT CHANNEL SETTING (0208~0215) PICTURE (P8)

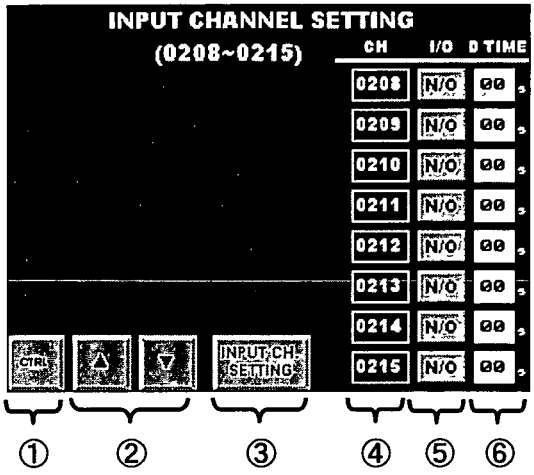

①: "CTRL"

②: Move to next or previous Picture.

③: Move to "INPUT CHANNEL SETTING" Picture.

④: Input channel No.

⑤: Select input signal (N/C ⇔ N/O) with pushing "CTRL"

⑥: Touch for indicating key-pad at left side.
Set delay time for each input channel with key-pad and push "ENTER" on key-pad.

INPUT CHANNEL SETTING (0300~0307) PICTURE (P9)

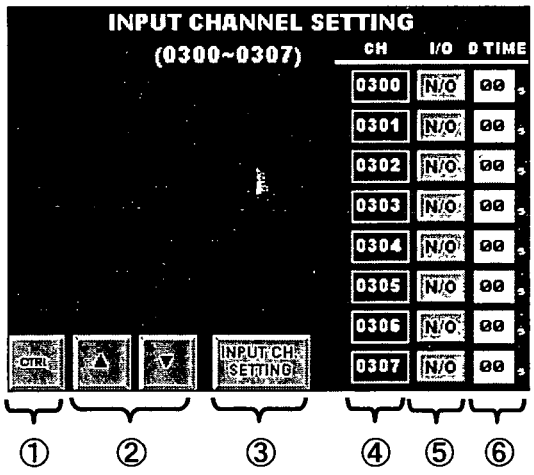

①: "CTRL"

②: Move to next or previous Picture.

③: Move to "INPUT CHANNEL SETTING" Picture.

④: Input channel No.

⑤: Select input signal (N/C ⇔ N/O) with pushing "CTRL"

⑥: Touch for indicating key-pad at left side.
Set delay time for each input channel with key-pad and push "ENTER" on key-pad.

INPUT CHANNEL SETTING (0308~0315) PICTURE (P10)

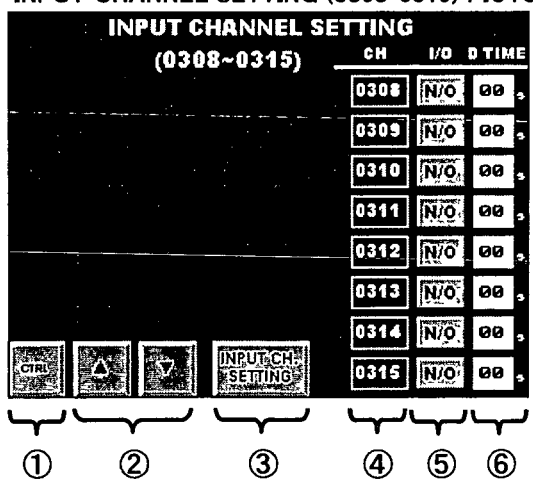

①: "CTRL"

②: Move to next or previous Picture.

③: Move to "INPUT CHANNEL SETTING" Picture.

④: Input channel No.

⑤: Select input signal (N/C ⇔ N/O) with pushing "CTRL"

⑥: Touch for indicating key-pad at left side.
Set delay time for each input channel with key-pad and push "ENTER" on key-pad.

COMMAND TIMER SETTING PICTURE (P11)

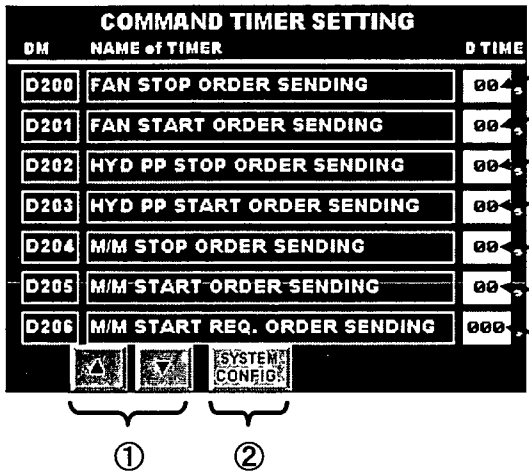

<<< The setting time can be changed on this Picture >>>

The time of sending STOP order to Fan Starter.

The time of sending START order to Fan Starter.

The time of sending STOP order to Hyd P'P Starter.

The time of sending START order to Hyd P'P Starter.

The time of sending STOP order to Main Motor Starter.

The time of sending START order to Main Motor Starter.

The time of sending Main Motor START REQUEST command to Main Switch Board.

①: Move to next or previous Picture.
②: Move to "SYSTEM CONFIG" Picture.

START FAIL TIMER SETTING PICTURE (P12)

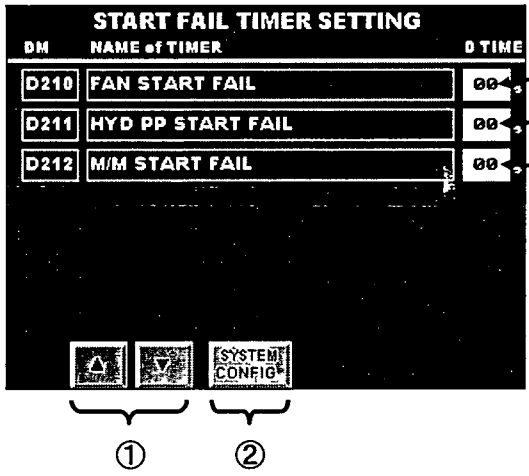

The time for detecting "FAN START FAIL"

The time for detecting "HYD PP START FAIL"

The time for detecting "MAIN MOTOR START FAIL"

①: Move to next or previous Picture.
②: Move to "SYSTEM CONFIG" Picture.

"INTERLOCK LIST" PICTURE (P21) **SAMPLE PICTURE**

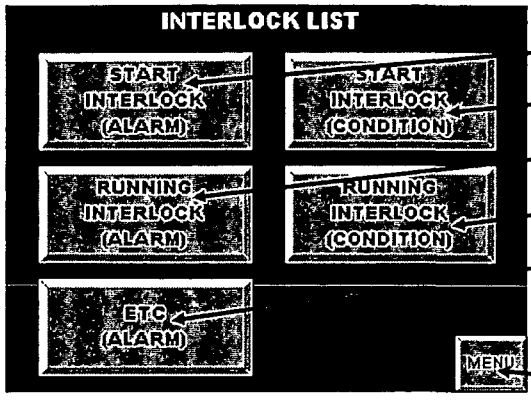

Move to "START INTERLOCK (ALARM)" Picture.

Move to "START INTERLOCK (CONDITION)" Picture.

Move to "RUNNING INTERLOCK (ALARM)" Picture.

Move to "RUNNING INTERLOCK (CONDITION)" Picture.

Move to "ETC (ALARM)" Picture.

Move to "MENU" Picture.

"START INTERLOCK (ALARM)" PICTURE (P22)
<At Normal>

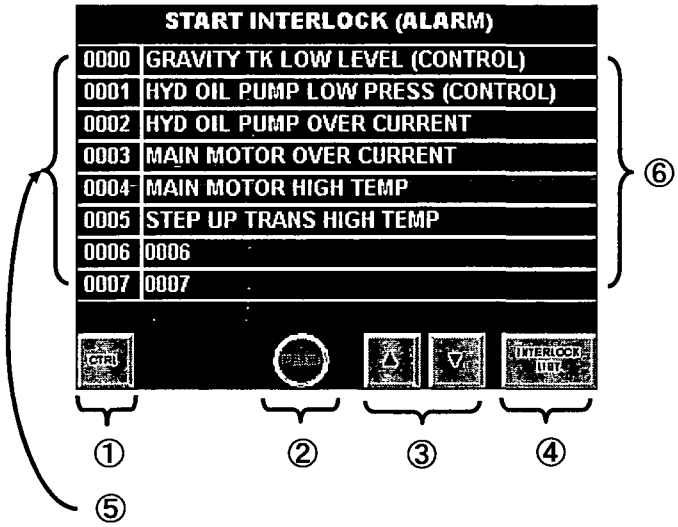

①: "CTRL"

②: "RESET"
(Operate with pushing "CTRL")

③: Move to next or previous Picture.

④: Move to "INTERLOCK LIST" Picture.

⑤: Input channel No.

⑥: Name for each input signal (alarm).
It flickers to white letters on red ground, when alarm happens.

"START INTERLOCK (ALARM)" PICTURE (P22)
< At Abnormal>

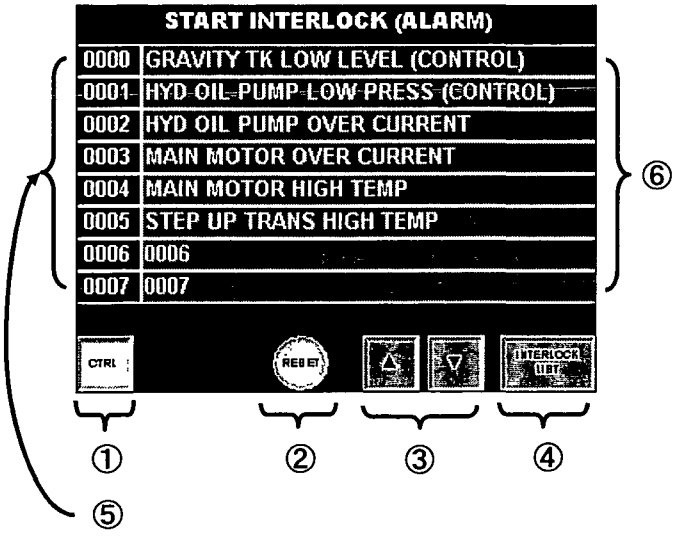

SAMPLE PICTURE

"START INTERLOCK (CONDITION)" PICTURE (P23)
<At not fulfill each conditions>

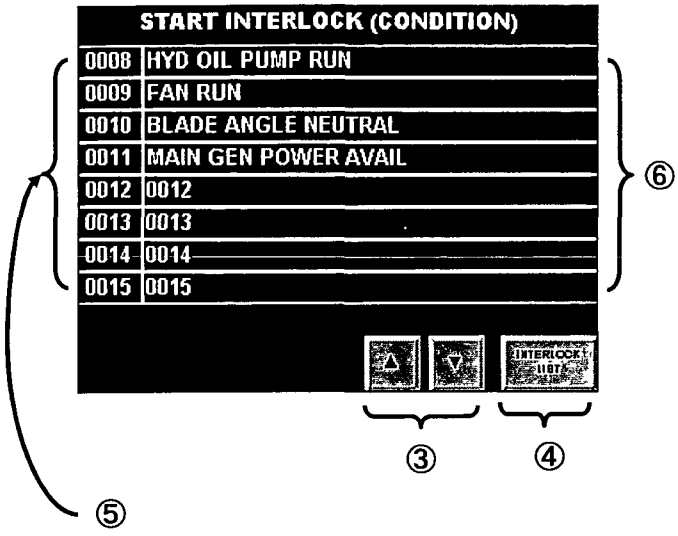

③: Move to next or previous Picture.

④: Move to "INTERLOCK LIST" Picture.

⑤: Input channel No.

⑥: Name for each input signal (condition).
It changes to black letters on yellow ground, when it fulfills the condition.

"START INTERLOCK (CONDITION)" PICTURE (P23)
<At fulfill each conditions>

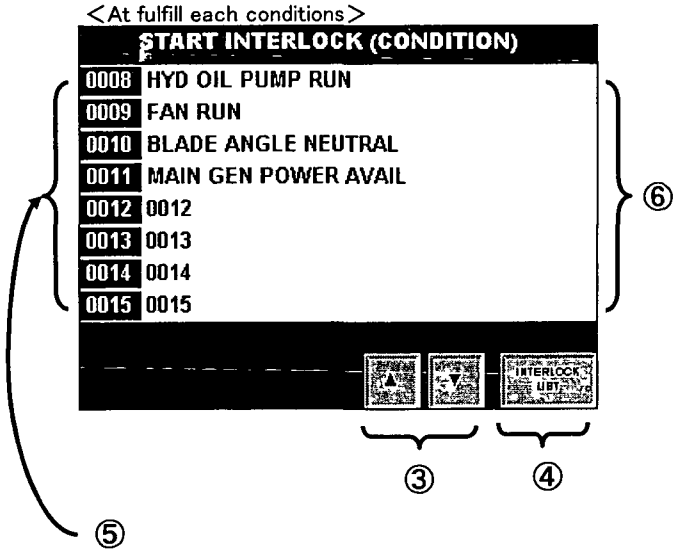

SAMPLE PICTURE

"RUNNING INTERLOCK (ALARM)" PICTURE (P24)

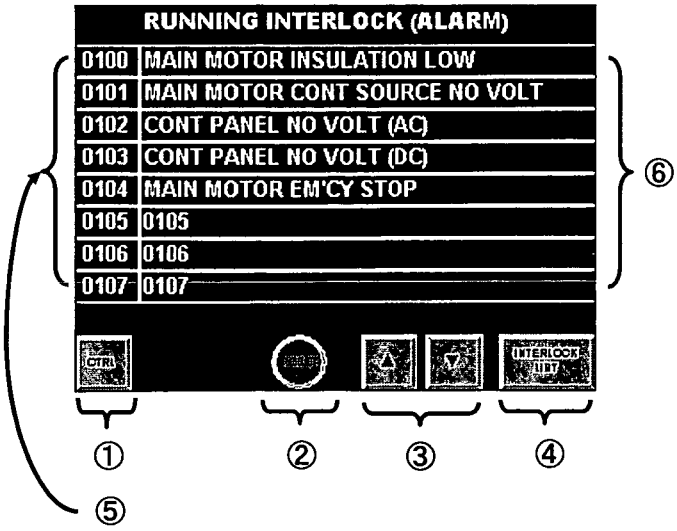

①: "CTRL"

②: "RESET"
(Operate with pushing "CTRL")

③: Move to next or previous Picture.

④: Move to "INTERLOCK LIST" Picture.

⑤: Input channel No.

⑥: Name for each input signal (alarm).
It flickers to white letters on red ground, when alarm happens.

"RUNNING INTERLOCK (CONDITION)" PICTURE (P25)

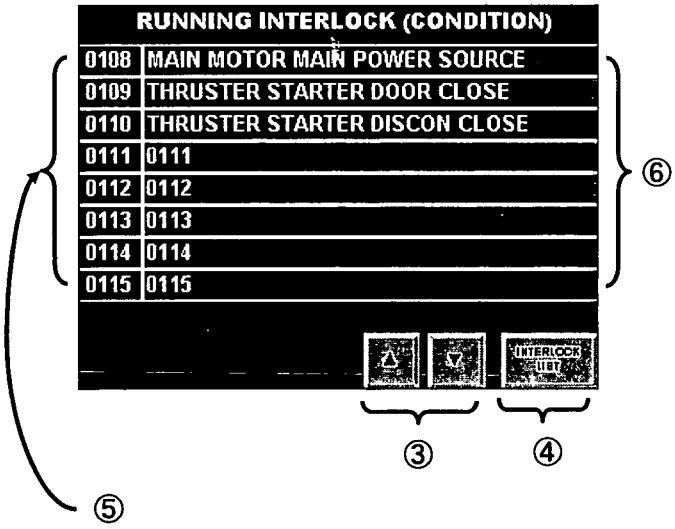

③: Move to next or previous Picture.

④: Move to "INTERLOCK LIST" Picture.

⑤: Input channel No.

⑥: Name for each input signal (condition).
It changes to black letters on yellow ground, when it fulfills the condition.

"ETC (ALARM)" PICTURE (P26)

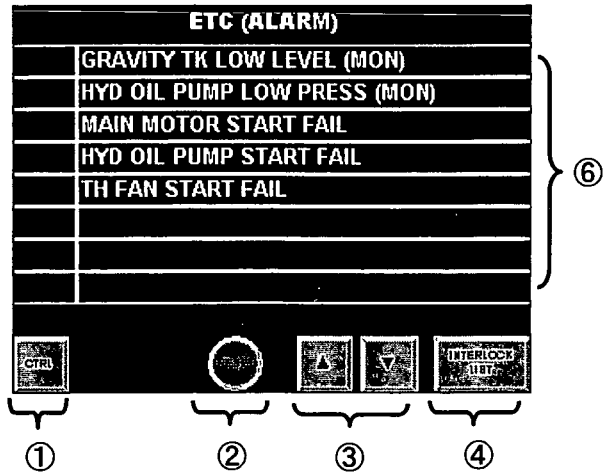

①: "CTRL"

②: "RESET"
(Operate with pushing "CTRL")

③: Move to next or previous Picture.

④: Move to "INTERLOCK LIST" Picture.

⑥: Name for each alarm.
It flickers to white letters on red ground, when alarm happens.

Section 2

Before Connecting

This section provides information on methods for connecting NS-series PTs that must be understood before connecting the host and peripheral devices.

2-1 Connecting the Host 2-2
2-1-1 Communications Types and Connection Methods 2-2
2-2 Part Names and Functions 2-7

B1

2-2 Part Names and Functions

The part names and functions of the PT are described here.

NS12/NS10 Front Panel

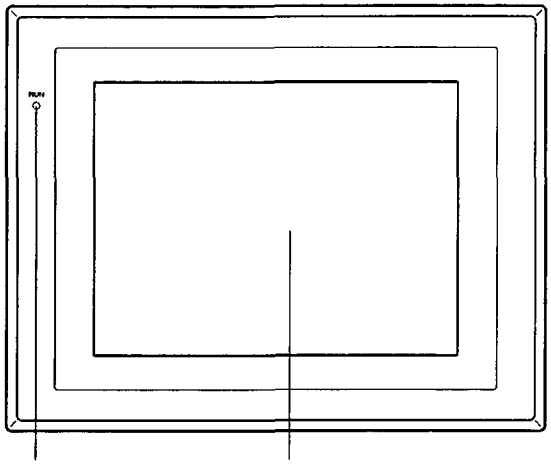

RUN indicator
Lights or flashes to indicate the status of the PT.

Display
NS12: 12.1-inch TFT high-luminance LCD
NS10: 10.4-inch TFT high-luminance LCD
The entire display is a touch panel that serves as an input device.

RUN Indicator Status

Indicator	Green	Orange	Red
Lit	PT is operating normally.	• The file system check that is performed immediately after the power is turned ON is in progress. • The battery power is low, or the battery is not connected and the PT is operating normally.	An error occurred at startup.
Flashing	Memory Card transfer ended normally. A backlight error occurred immediately after power was turned ON.	Memory Card transfer in progress.	Memory Card transfer ended abnormally.
Not lit	• Power is not being supplied to the PT. • The fuse is broken. • The system program is damaged and the system cannot be booted.		

NS12/NS10 Rear Panel Switches

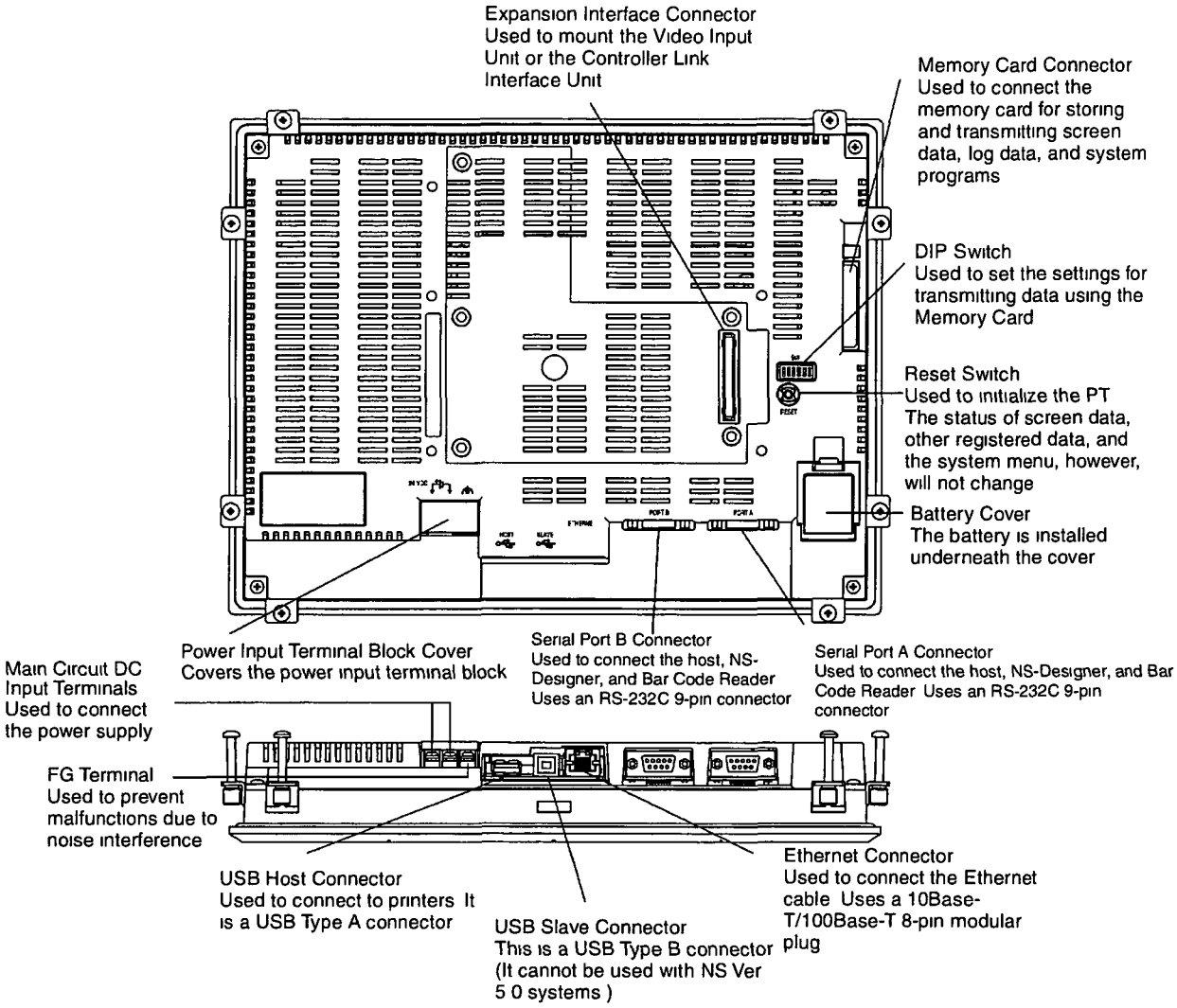

Note Confirm system safety before turning the power ON/OFF or restarting. Otherwise the system may operate unpredictably.

NS8 Front Panel

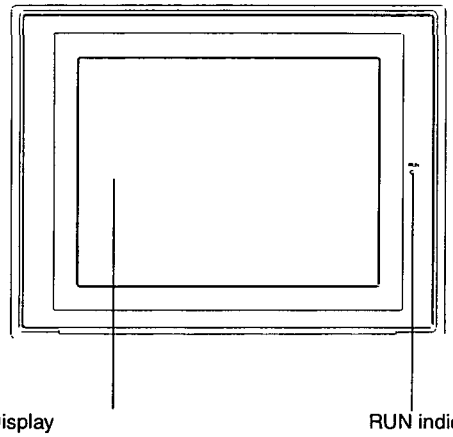

Display
8.4-inch TFT high-luminance color LCD
The entire display is a touch panel that serves as an input device.

RUN indicator
Lights or flashes to indicate the status of the PT.

RUN Indicator Status

Indicator	Green	Orange	Red
Lit	PT is operating normally.	• The file system check that is performed immediately after the power is turned ON is in progress. • The battery power is low, or the battery is not connected and the PT is operating normally.	An error occurred at startup.
Flashing	Memory Card transfer ended normally.	Memory Card transfer in progress.	Memory Card transfer ended abnormally.
Not lit	• Power is not being supplied to the PT. • The fuse is broken. • The system program is damaged and the system cannot be booted.		

NS8 Rear Panel

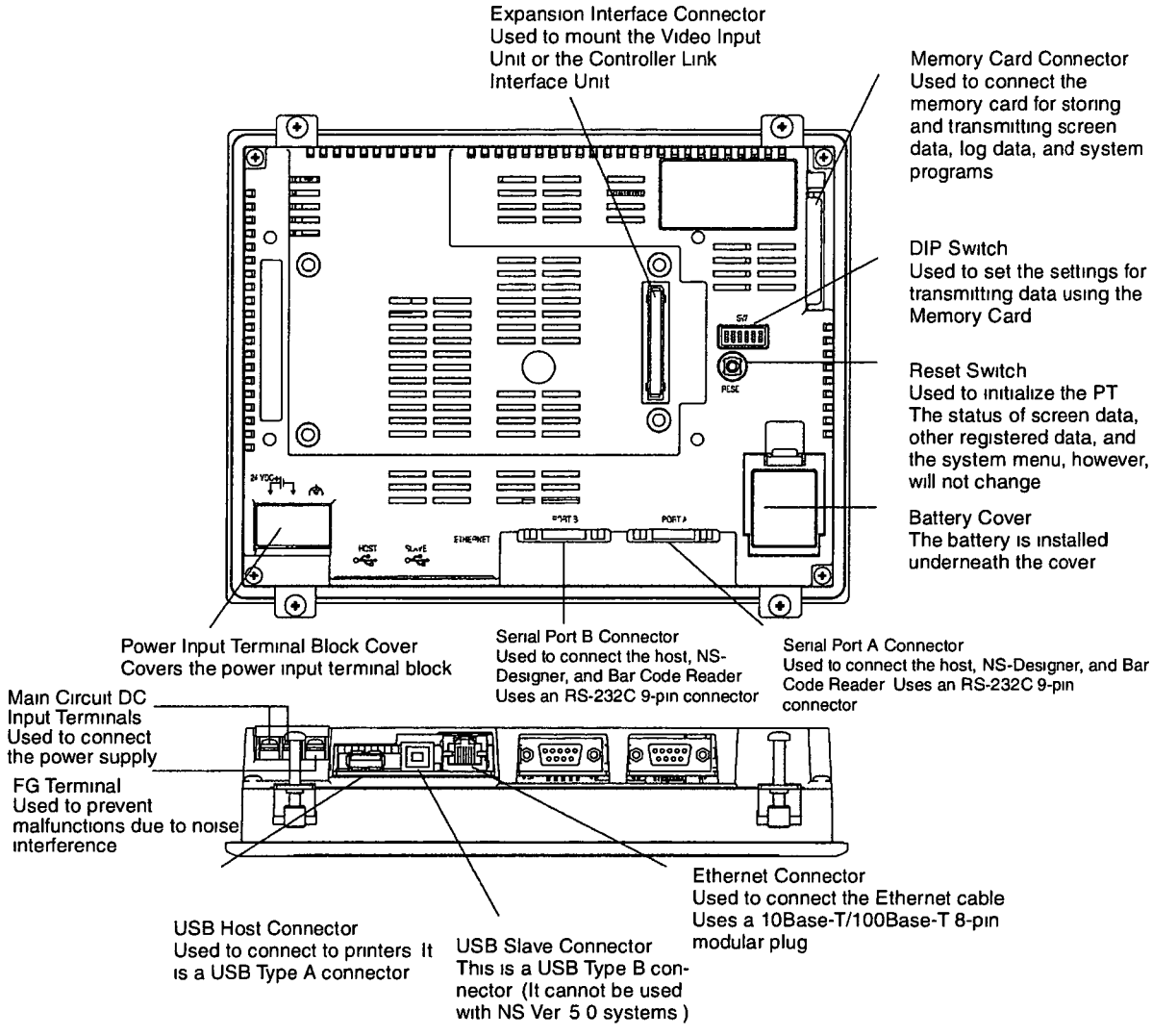

Note Confirm system safety before turning the power ON/OFF or restarting. Otherwise the system may operate unpredictably.

NS5 Front Panel

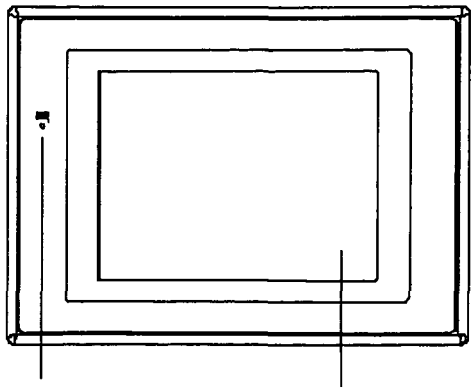

RUN indicator
Lights or flashes to indicate the status of the PT.

Display
5.7-inch STN color LCD
The entire display is a touch panel that serves as an input device.
Colors may be lighter toward the edge of the screen.
This is characteristic of STN displays and not an error.

RUN Indicator Status

Indicator	Green	Orange	Red
Lit	PT is operating normally.	• The file system check that is performed immediately after the power is turned ON is in progress. • The battery power is low, or the battery is not connected and the PT is operating normally.	An error occurred at startup.
Flashing	Memory Card transfer ended normally.	Memory Card transfer in progress.	Memory Card transfer ended abnormally.
Not lit	• Power is not being supplied to the PT. • The fuse is broken. • The system program is damaged and the system cannot be booted.		

NS5 Rear Panel

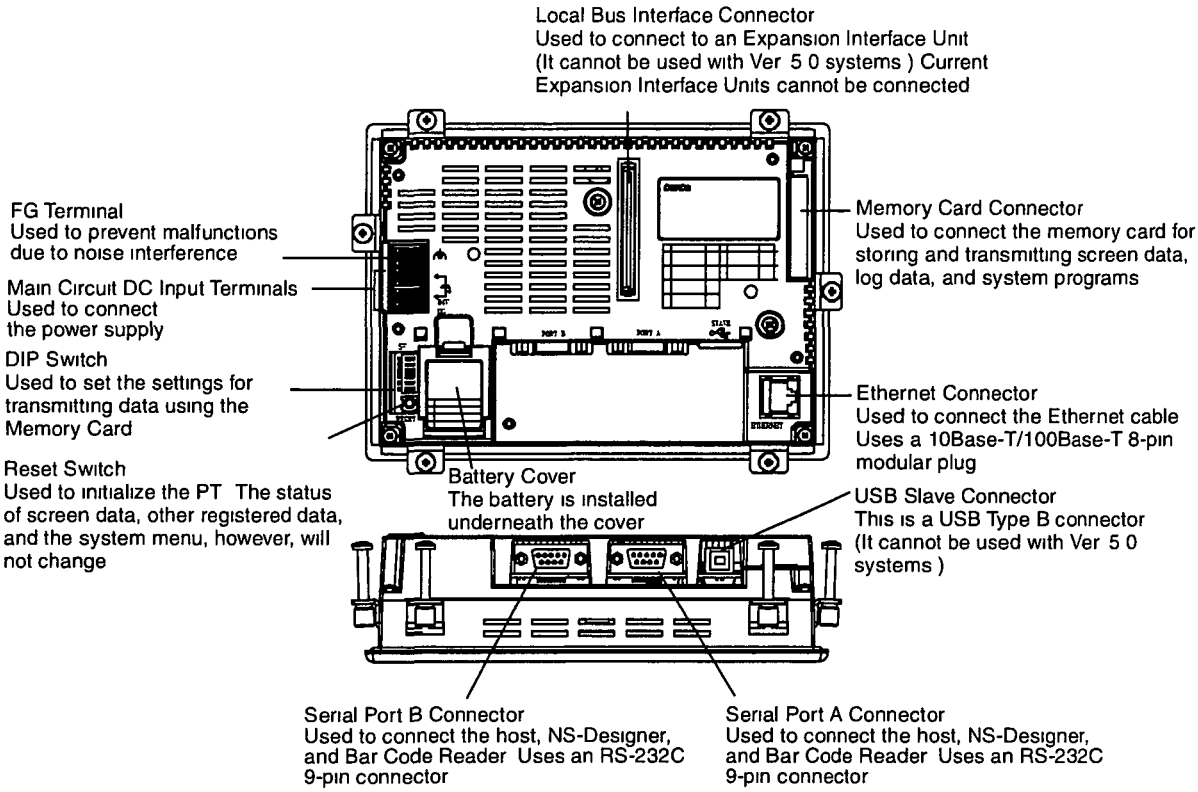

Note Confirm system safety before turning the power ON/OFF or restarting Otherwise the system may operate unpredictably.

Touch Panel

The touch switches on the front panel of the PT are used to perform input operations Press the touch switches to perform operations such as switching screens and sending bit status to the host

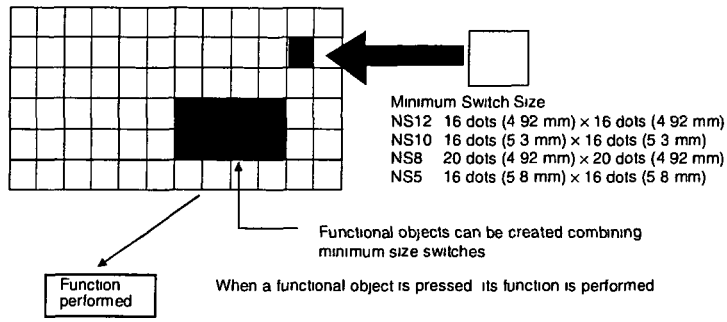

To ensure correct input operations, create touch switches so that they consist of at least two switches horizontally and vertically

Note
- Press the touch switches with a pressure of 30 N max
- Do not press the touch switches when the backlight is not lit or when there is no display
- Check system safety before pressing the touch switches
- Inputs may not be recognized if the touch switches are pressed in rapid succession Check that one input operation has finished before performing the next one

Reference • Pressing Three Switches Simultaneously

When the positions of multiple touch switches are set as shown in the example and three switches are pressed simultaneously, the touch switches will malfunction due to structural characteristics

Position the touch switches carefully In the example shown below, switches have been created in positions A and B, and at points C and D, where the vertical and horizontal lines through A and B intersect

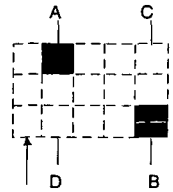

Minimum touch switch frame

- If touch switches A B, and C are turned ON simultaneously, switch D may also turn ON due to the structure of the touch panel
- In the same way, if touch switches A, B and D are turned ON simultaneously, switch C may also turn ON

Section 3

Installing the PT and Connecting Peripheral Devices

This section describes the methods used to install the PT and connect peripheral devices.

For details on methods for connecting the host, refer to *Section 4 Connecting the Host to the Serial Port* or *Section 5 Connecting to Host via Ethernet or Controller Link.*

3-1 Installing the PT 3-3
3-1-1 Installation Environment 3-3
3-1-2 Installing RS-232C/RS-422A Converters 3-4
3-1-3 Mounting the PT to the Control Panel 3-4
3-1-4 Connecting the Power Supply 3-5
3-1-5 Wiring the Ground Wire 3-7
3-1-6 Peripheral Device Connection Limitations 3-7
3-2 Starting the PT 3-8
3-2-1 Operation at Startup 3-8
3-2-2 Starting the PT for the First Time 3-10
3-3 Connecting the NS-Designer 3-12
3-4 Connecting to Bar Code Readers 3-13
3-4-1 Connection Methods 3-13
3-4-2 Setting Bar Code Readers 3-14
3-4-3 Data Format 3-15
3-4-4 Bar Code Input 3-15
3-5 Connecting to Printers 3-16
3-5-1 Connection Method 3-16
3-6 Using Memory Cards 3-17
3-6-1 Installation 3-18
3-6-2 Replacing System Programs 3-19
3-6-3 Transferring Data with Memory Cards 3-19
3-7 Installing the Video Input Unit 3-26
3-7-1 Video Input Unit Components 3-26
3-7-2 Nomenclature and Functions 3-27

3-6 Using Memory Cards

1. Memory Cards can be used with the PT. History files can be stored in Memory Cards as CSV files. There are four different types of history file, as follows:

Alarm/event history:	Stores alarm/event history data that has been registered by NS-Designer.
Data log:	Stores trend data.
Operation log:	Stores screen operation log data.
Error log:	Stores error history data for when macros are executed.

   The history data is normally saved in internal memory that is backed up in the PT, but can also be saved in CSV file format. When history data is saved as a CSV file, it is stored in the Memory Card.

   The CSV files are saved into the log folder created in the Memory Card.

2. The following data can be transferred to the Memory Card.
   - System programs (the programs required to operate the PT, such as for communications and fonts)
   - Screen data (data used in the PT display)

There are three methods for transferring data, as follows:

- Automatic download (Transfers data from the Memory Card to the PT.)
- Automatic upload (Transfers data from the PT to the Memory Card.)
- Manual transfer (Direction for data transfer is selected manually.)

Reference There are three types of recommended Memory Cards, each of which has a different capacity.

Model	Memory capacity	Memory type
HMC-EF172	15 Mbytes	Flash memory
HMC-EF372	30 Mbytes	
HMC-EF672	64 Mbytes	

The Memory Card can be overwritten approximately 100,000 times.
When using the PC card socket in devices such as laptop computers, use the HMC-AP001 Memory Card Adapter.

For details on transferring data with the computer (NS-Designer), refer to *Section 10 Transferring Data to and from PTs* in the *NS-Designer Operation Manual.*

3. The data created in Data Block Tables can be saved as CSV files in DBLK folder on a Memory Card.

4. The contents of the PT's internal memory can be saved to Memory Cards using macros. The contents of Memory Cards can also be written to the PT's internal memory.

3-6-1 Installation

The Memory Card is installed in the memory card interface on the side of the PT.

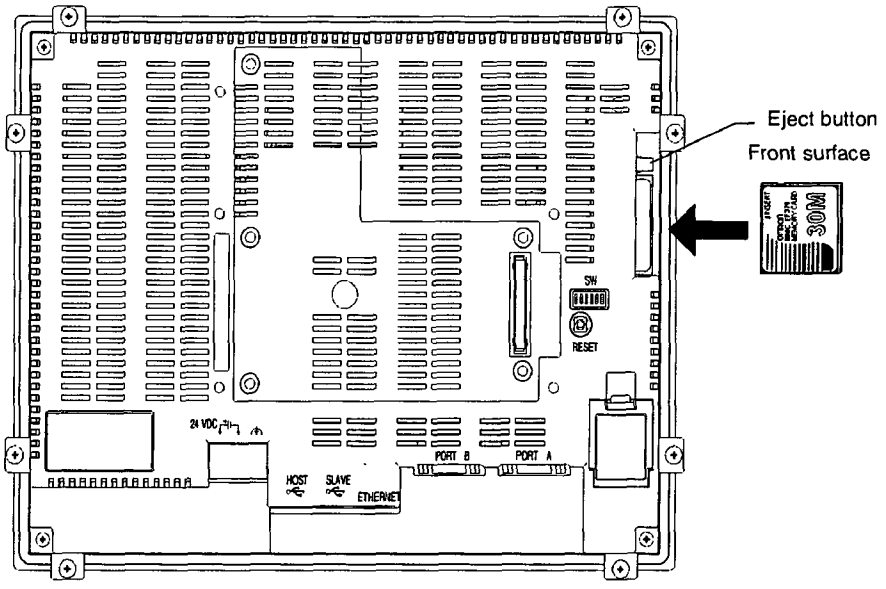

Push the Memory Card firmly into the back of the slot. (The eject button will be pushed out when the Memory Card is installed properly.)

- **Removing the Memory Card**

Press the eject button.

To stop the Memory Card from springing out and falling, place your middle finger on the eject button, and hold the Memory Card with your index finger.

3-6-2 Replacing System Programs

When System Program Ver. 5 is selected and loaded with the NS-Designer, it is stored under the NS-Designer's install folder (default location is C:\Program Files\Omron\NS-Designer_V5) in folders that are created for each type and version, as follows:

\SystemBackup\NS12-V1\V5_x\bank1:	Ver. 5.x for NS12
\NS10-V1\V5_x\bank1:	Ver. 5.x for NS10
\NS8-V1\V5_x\bank1:	Ver. 5.x for NS8
\NS5-V1\V5_x\bank1:	Ver. 5.x for NS5

To replace a system program, use Windows Explorer or another method to copy each of the folders for the required system program under \bank1 to the route directory of the Memory Card.

For details on methods for transferring data from the Memory Card to the PT, refer to *3-6-3 Transferring Data with Memory Cards*.

3-6-3 Transferring Data with Memory Cards

Using a Memory Card with the PT allows system programs (programs that are required to operate the PT, such as those for communications and fonts) and screen data to be transferred to and from the PT.

Use the DIP switch on the rear panel of the PT to set the operating mode for data transfer to automatic download (transfers data from the Memory Card to the PT), automatic upload (transfers data from the PT to the Memory Card), or manual transfer (user selects whether to download or upload).

Data can be transferred with the Memory Card when the PT is started up.

Note
- Before transferring data, check that the system programs and screen data types match those in the PT.
- Always reset the PT or turn ON the power again after changing the DIP switch setting.
- Do not perform the following operations while accessing the Memory Card. The data may be damaged and the Memory Card may need to be formatted.
  - Turn OFF the power to the PT.
  - Press the PT reset switch.
  - Remove the Memory Card.
- Always use the following procedure to remove the Memory Card.

If the PT system is damaged due to the power being turned OFF while a file is being written, or other reason, using normal downloading to replace the system programs may not be possible. For details on troubleshooting, refer to page *3-25*.

DIP Switch

The Memory Card can be divided into up to four areas, which are called banks.

The DIP switch on the rear panel of the PT has six pins. The ON/OFF combination of these pins specifies which transfer method is used.

Pin No.	Function
1	Specifies bank 1 when transferring. (ON: Specifies bank 1.)
2	Specifies bank 2 when transferring. (ON: Specifies bank 2.)
3	Specifies bank 3 when transferring. (ON: Specifies bank 3.)
4	Specifies bank 4 when transferring. (ON: Specifies bank 4.)
5	Specifies upload or download. (ON: Upload, OFF: Download)
6	Specifies manual or automatic transfer. (ON: Manual, OFF: Automatic)

Banks are automatically created under the following conditions.

- When data is transferred to the Memory Card using the NS-Designer transfer program.
- When data is transferred (uploaded) from the PT.

Reference

- When transferring data, only one bank can be specified. Set only one of pins 1 to 4 to ON.
- The PT will operate normally when the DIP switch is set to a combination other than one specifying automatic upload, download, or manual transfer.
- When data has already been stored in the banks of the Memory Card and uploading is executed, the previous data in the specified bank will be deleted. Always check the data stored in the banks before uploading.
- If the \BANK□\DATA and \BANK□\SYSTEM are created manually in the Memory Card, and used for purposes other than transferring data, when uploading is performed, the data in the folders will be deleted, and the data in the PT will be copied to the folders. Therefore, do not use \BANK□\DATA or \BANK□\SYSTEM when creating folders in the Memory Card.
- Set all pins to OFF when using the PT for normal operations.

Automatic Download

An automatic download transfers system programs and screen data from the Memory Card to the PT.

Set the DIP switch for automatic download, as shown below.

The Memory Card cannot be used to transfer data when the DIP switch pins are set to combinations other than those specified here.

DIP switch pin and status						Operation
1	2	3	4	5	6	
ON	OFF	OFF	OFF	OFF	OFF	Automatically downloads bank 1 system programs and screen data.
OFF	ON	OFF	OFF	OFF	OFF	Automatically downloads bank 2 system programs and screen data.
OFF	OFF	ON	OFF	OFF	OFF	Automatically downloads bank 3 system programs and screen data.
OFF	OFF	OFF	ON	OFF	OFF	Automatically downloads bank 4 system programs and screen data.

Use the following procedure to automatically download data.

1. Turn OFF the power to the PT.
2. Set the DIP switch.
3. Insert the Memory Card with the specified banks stored in it into the PT.
4. Turn ON the power to the PT.
   The system programs and screen data will be written to the PT.
5. The status of the PT indicators during data transfer is as shown below.
   Do not remove the Memory Card during data transfer.
   Transferring data: Indicator flashes orange.
   Transferring completed: Indicator flashes green.
   Error occurred: Indicator flashes red.
   Refer to page *3-25* if an error occurs.
6. Turn OFF the power.
7. Remove the Memory Card.
8. Turn OFF all the DIP switch pins.
9. Turn ON the power.

A warning message will not be displayed when automatic download is executed even if the PT model, version, and language for the system programs and screen data that are stored in the PT are different from those that are stored in the Memory Card.

Always check carefully that the PT model and Memory Card details match before transferring data automatically.

● Automatic Upload

An automatic upload transfers system programs and screen data from the PT to the Memory Card.

Set the DIP switch for automatic upload, as shown below.

The Memory Card cannot be used to transfer data when the DIP switch pins are set to combinations other than those specified here.

DIP switch pin and status						Operation
1	2	3	4	5	6	
ON	OFF	OFF	OFF	ON	OFF	Automatically uploads system programs and screen data to bank 1.
OFF	ON	OFF	OFF	ON	OFF	Automatically uploads system programs and screen data to bank 2.
OFF	OFF	ON	OFF	ON	OFF	Automatically uploads system programs and screen data to bank 3.
OFF	OFF	OFF	ON	ON	OFF	Automatically uploads system programs and screen data to bank 4.

Use the following procedure to automatically upload data.

1. Turn OFF the power to the PT.
2. Set the DIP switch.
3. Insert the Memory Card into the PT.
4. Turn ON the power to the PT.
   The system programs and screen data will be written to the Memory Card.
5. The status of the PT indicator during data transfer is as shown below.
   Do not remove the Memory Card during data transfer.
   Transferring data: Indicator flashes orange.
   Transferring completed: Indicator flashes green.
   Error occurred: Indicator flashes red.
   Refer to page *3-25* if an error occurs.
6. Turn OFF the power.
7. Remove the Memory Card.
8. Turn OFF all the DIP switch pins.
9. Turn ON the power.

A warning message will not be displayed when automatic upload is executed even if the PT model, version, and language for the system programs and screen data that are stored in the PT are different from those that are stored in the Memory Card

Always check carefully that the PT model and Memory Card details match before transferring data automatically.

● Manual Transfer

Use screen operations to select the direction (download, upload), contents (project, project and system, or system), and banks.

Set pin 6 of the DIP switch to ON for manual transfer.

DIP switch pin and status						Operation
1	2	3	4	5	6	
					ON	Manually downloads or uploads system programs and screen data.
OFF	OFF	OFF	OFF	OFF		

Use the following procedure to manually transfer data.

1. Turn OFF the power to the PT.
2. Turn ON pin 6 of the DIP switch.
3. Insert the Memory Card into the PT.
4. Turn ON the power.
5. The following screen will be displayed on the PT.

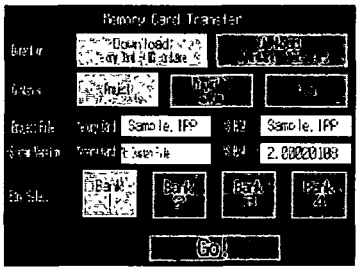

6. Specify the direction, contents (project, project and system, or system), and bank.
7. The IPP file name and system version that are stored in both the specified bank of the Memory Card and the PT will be displayed in the Project File and System Version fields. After confirming the details, press the **Go** Button.
8. A message confirming the transfer will be displayed. Press the **OK** Button to execute the specified data transfer operation. When downloading, the screen data previously stored in the PT will be deleted.
9. A warning message will be displayed if the PT model, system program/screen data versions, and language for the data stored in the PT are different from that for the data stored in the Memory Card. Press the **Yes** Button to continue transferring the data.
10. The uploading/downloading screen will be displayed while data is being transferred. A screen indicating that the transfer has completed will be displayed when the transfer has finished. (If an error occurs, a transfer error screen will be displayed. Refer to page *3-25* if an error occurs.)
11. The indicator will flash green when transferring has finished.
12. Turn OFF pin 6 of the DIP switch and reset the PT.

A warning message is not displayed at the PT when the PT model, version, and language are different if the system programs used are version 1.0□.

Therefore, if the wrong data is downloaded, execute the transfer operation again using automatic download.

The system settings cannot be changed for the upload operation.

Errors

- During Automatic Transfer
  The indicator on the front panel will flash red if an error occurs during data transfer.
  Check the following items if an error occurs.
  - Is the Memory Card inserted into the PT?
  - Do the banks set with the DIP switch exist in the Memory Card? (During Download)
  - Is the size of the transfer data greater than the free space in the PT or Memory Card?

Check these items before transferring data again.

Reference An error message will not be displayed if an error occurs.

- During Manual Transfer

If an error occurs during data transfer, a transfer error screen will be displayed.
Check the following items for each message displayed.

Error Messages Requiring Checking

Error message	Check item
Memory Card Error Could not recognize a Memory Card. Check the Memory Card and reset the NS Hardware.	• Is the Memory Card inserted into the PT? • Is the Memory Card damaged?
Project Transmission Error Transmission Failed. Check the Memory Card and reset the NS Hardware.	• Was the Memory Card removed during data transfer? • Is the free space on the Memory Card insufficient? • Is the Memory Card damaged? • Does the screen data volume exceed the memory capacity of the PT?
System Transmission Error Transmission Failed. Check the Memory Card and reset the NS Hardware.	
Cannot find source data. Are you sure to continue Downloading/Uploading?	• Does the transfer source directory or file exist? (Note: If the **Yes** Button is pressed and data is transferred, the previous data at the transfer destination will be deleted.)

After checking the message, reset the PT, and transfer the data again.

Inability to Replace System Program Using Automatic Download

It may not be possible to replace the system program using a normal download if the PT system has been damaged, e.g., if the power was turned OFF while a file was being written. Use the following procedure to operate the PT if system program replacement is not possible or the system program is damaged and the PT does not start.

1. Copy *Recover_5_x.* to a Memory Card. This program can be installed with NS-Designer Ver. 5.0 by specifying it in the set up wizard.
2. Place the Memory Card into the PT and turn ON the power. The recovery program will start automatically.
   Refer to the *How to recover Ver. 5. pdf* for details on recovery operations. This can be started from ***Windows Start – Programs – Omron – NS-Designer Ver. 5.0 – How to recover the system prog Ver. 5.***
3. The system will start automatically downloading data from bank 1 of the Memory Card to the PT.

The indicator will flash green when the download has finished.

Section 7

Maintenance and Troubleshooting

This section describes the maintenance and inspection methods for preventing errors occurring, and troubleshooting measures when errors occur in the PT.

7-1 Maintenance 7-2
7-1-1 Replacing the Battery 7-2
7-2 Inspection and Cleaning 7-4
7-3 Troubleshooting and Maintenance 7-6
7-4 Requesting a Replacement PT 7-14

7-1 Maintenance

Perform maintenance operations to maintain the PT in optimum condition.

⚠ WARNING

Do not attempt to take the Unit apart and do not touch any internal parts while the power is being supplied. Doing either of these may result in electrical shock.

● Backing up Project Data

Always back up project data and store it in a safe place when the PT malfunctions and needs to be sent out for repair, or when replacing the Unit.

● Spare Units

Prepare a spare PT to allow quick recovery of the system at such times as when the PT malfunctions, or the service life of the backlight has expired causing poor screen visibility.

● Backlight

The backlight must be replaced when the brightness of the display backlight dims and the display becomes difficult to see. The backlight cannot be replaced by the user.

Contact your nearest OMRON representative.

- **Backlight Replacement Guidelines**

Replace the backlight according to the following guidelines under normal conditions.

> After 50,000 hours of use at room temperature and humidity, (or after approximately 40,000 hours if an NS8 PT is used.)

The service life of the backlight will be especially shortened if used in a low-temperature environment. Replace the backlight when the brightness dims and the display becomes difficult to see.

7-1-1 Replacing the Battery

Use a lithium battery to back up data other than screen data, such as calendar, clock, and log data.

The battery service life is approximately five years at 25°C. The service life will be shortened if the battery is used at higher temperatures. Replace the battery periodically, according to the operating environment.

Keep a spare battery available, so that the battery can be replaced immediately when required.

- **Battery Models**

CJ1W-BAT01

- **Replacement Guidelines**

The guidelines for replacing the battery are as follows:

- Replace when five years have lapsed since a new battery was installed in the Unit.
- Replace within five days after the RUN indicator lights orange.

Note
- Never use batteries that have been subjected to a severe shock, such as being dropped on the ground. Batteries subjected to shock may leak.
- When mounting the battery, be sure to use the correct battery and mount it correctly.

- **Replacement Method**

Perform the following procedure within five minutes to replace the battery.

The shape of the battery cover and the direction for installing the connector depend on the PT model.

1. After power to the PT has been turned ON and at least five minutes have lapsed, turn OFF the power.
2. Open the battery cover on the rear panel of the PT.
3. Remove the battery that is secured inside the PT, grasp the cable, and pull the connector out vertically to remove it.

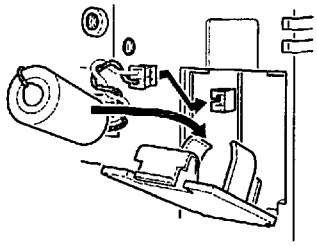

4. Connect the new battery connector, and insert the battery into the battery holder in the battery cover.

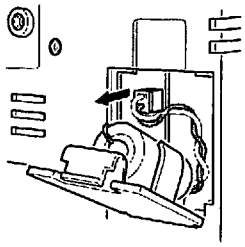

5. Close the battery cover, being careful not to squash the battery cable.

7-2 Inspection and Cleaning

Clean and inspect the PT periodically to maintain it in optimum condition for use.

Cleaning Methods

The screen visibility will be impaired if the display becomes dirty. Clean the display periodically using the following methods:

- For daily cleaning, wipe with a soft, dry cloth. Attempting to remove heavy dirt with the cloth may scratch the front panel sheet. Use a damp cloth and wipe the surface again to remove dirt.
- If dirt cannot be removed using a dry cloth, dampen the cloth sufficiently with a neutral cleaning agent solution (approximately 2%), squeeze the cloth out, and then wipe the surface.
- Materials such as rubber, vinyl, or tape that are attached to the Unit will leave stains if left for a long time. If such material is attached to the Unit, remove when cleaning.

Note Never use benzene, thinner, or other volatile solvents, or chemical cloths to clean the PT.

Inspection Methods

Inspect the PT once every six to twelve months. Shorten the interval between inspections when using the PT in extreme conditions, such as under high temperatures, high humidity, or environments subject to large quantities of dust.

- **Inspection Items**

Inspect the PT for the following items to check whether the PT is operating within the specified criteria. If the PT is outside the criteria, use measures such as improving the operating environment to conform to the standards, or tightening screws.

Inspection items	Inspection details	Criteria	Inspection means
Power supply	Power terminal voltage fluctuation	Allowable voltage range (24 VDC ±15%)	Tester
Ambient environment	Ambient temperature (temperature in control panel)	0 to 50°C (Refer to *Appendix 2.*)	Thermometer
	Ambient humidity (temperature in control panel)	35% to 85% (Refer to *Appendix 2.*)	Temperature meter
	Presence of dust	No dust accumulated.	Visual inspection
	Presence of oil	No oil between front panel sheet and molding.	Visual inspection
Mounting conditions	Looseness of fixed mounting bracket	Specified torque.	Phillips screwdriver
	Connection status of Connecting Cable Connectors	Fully inserted, locked, and with No looseness.	Phillips screwdriver
	Looseness of external wiring screws	No looseness.	Phillips screwdriver
	Status of external connecting cables	No breaks or other damage	Visual inspection, tester
Parts with limited service life	Backlight brightness	Sufficient brightness. Backlight life (at room temperature of 25°C) is 50,000 hours, as a guideline.	Visual inspection
	Battery	5 years (at room temperature of 25°C).	Replace every 5 years

Note
- Do not disassemble, repair, or modify the PT.
- Follow all local government regulations, where applicable, when disposing of the Unit and used batteries.

7-3 Troubleshooting and Maintenance

When an error occurs while operating the PT, search for the symptom in the following table and take measures according to those provided.

Errors during Data Transfer

Symptoms at PT	Causes	Measures
Serial transfer not possible between NS-Designer and PT.	The NS-Designer is not connected to the PT.	Check the wiring conditions of the connecting cable. (Refer to *3-3 Connecting the NS-Designer.*)
	FinsGateway setting is incorrect.	Change the setting according to the following procedure. 1. Select *Start/Program/FinsGateway/Service Manager* from the Windows menu. 2. The PLC icon will be displayed in the bottom right of the screen. Right-click the icon and select *Setting.* 3. Click *Services* in the Basic Tab Page. Select *Serial Unit* under *Service Settings*, and then click the Start Button. 4. Click *Network* in the Basic Tab Page. Double-click *SerialUnit/COM1* under *Network and Unit Settings.* 5. Click the Network Tab Page in the SerialUnit Provider dialog box. Check that the network number is set to 1 or higher and is not the same as any other network number, that the *Exclusive* field is checked, and that the *Protocol* is set to ToolBusCV. Then click the OK Button. 6. Right-click the PLC icon in the bottom right of the screen and select *Terminate Service Manager.*
	The *Expansion Interface* for serial port B is set to the expansion interface (NS5 only).	Set the Expansion Interface to *Disable* on the Comm Tab Page from the NS5 System Menu.

Errors during PT Startup

Symptoms at PT	Causes	Measures
Indicators do not light.	Power is not being supplied to the PT.	Check the connection points and supply power to the PT correctly. (Refer to *3-1 Installing the PT.*)
	The fuse is broken.	The PT needs repair. Contact your nearest OMRON representative.
	The system program is corrupted (fatal error).	The PT may be faulty. Contact your nearest OMRON representative.
The indicator is lit orange and the screen is blank.	The system program is corrupted (fatal error).	The PT may be faulty. Contact your nearest OMRON representative.
The indicator is lit green and the screen is blank.	The system program is corrupted (non-fatal error).	Reinstall the system program. (Refer to *3-6 Using Memory Cards.*) Contact your nearest OMRON representative if the same problem occurs after reinstalling the system program.

Symptoms at PT	Causes	Measures
The indicator is flashing green and the buzzer repeatedly turns ON and OFF.	The backlight has malfunctioned.	The backlight must be replaced. Contact your nearest OMRON representative.
The screen is blank and the indicator is flashing green.	Automatic upload/download has ended normally.	This is not an error. Turn OFF all the DIP switch pins and turn ON the power to the PT again.
The screen is blank and the indicator is flashing red.	Automatic upload/download has ended abnormally.	The system program may be corrupted. Reinstall the system program. (Refer to *3-6 Using Memory Cards*.) If the same problem occurs after reinstalling the system program, the PT may be faulty. Contact your nearest OMRON representative. An attempt may have been made to transfer screens that are larger than the memory of the PT. Check the screen data at the transfer destination.
The indicator is lit red and the screen is blank.	The PT is faulty, or the system program is corrupted.	Reinstall the system program. (Refer to *3-6 Using Memory Cards*.) If the same problem occurs after reinstalling the system program, the PT may be faulty. Contact your nearest OMRON representative.

Errors during PT Powerup

Message	Cause	Possible countermeasure
FATAL ERROR No. 01: Touch Panel is not connected: Please contact your OMRON service center.	Touch panel error.	Contact your nearest OMRON representative.
FATAL ERROR No. 02: SRAM Initialization Error: Please contact your OMRON service center.	Hardware error in log SRAM.	
FATAL ERROR No. 03: MAC Address Error: Please contact your OMRON service center.	Incorrect MAC address.	
FATAL ERROR No. 04: PT Model type Identify Error: Please contact your OMRON service center.	Built-in model code cannot be read.	Contact your nearest OMRON representative.

Message	Cause	Possible countermeasure
ERROR No. 10: File System Error: Please recover the system program.	File system is corrupted. (A hardware fault occurred or power was interrupted during writing.)	Reinstall the system program by inserting the Memory Card containing the recovery program in the PT and resetting the PT or turning the power supply OFF and ON again. (Refer to *3-6 Using Memory Cards* in the Setup Manual.) If the same problem occurs after reinstalling the system program, contact your nearest OMRON representative.
ERROR No. 10: Fail in loading files or executing program: Please recover the system program.	File reading or program execution failed.	
ERROR No. 10: Fail in loading files: Please recover the system program.	File reading failed.	
ERROR No. 11: Fail in loading files: Please reinstall the system program.	File reading failed.	Execute automatic download of the system program. If the same problem occurs after downloading, insert the Memory Card containing the recovery program in the PT and reset the PT or turn the power supply OFF and ON again. (Refer to *3-6 Using Memory Cards* in the Setup Manual.) If the same problem occurs after reinstalling the system program, contact your nearest OMRON representative.
ERROR No. 11: Device check program error: Please reinstall the system program.	Hardware check program is corrupted.	
ERROR No. 11: SRAM check program error: Please reinstall the system program.	Log SRAM check program is corrupted.	
ERROR No. 11: IP Address Setting Error: Please reinstall the system program.	IP address setting program is corrupted.	
ERROR No. 11: Device check program error: Touch the screen to continue.	At startup with DIP switch 6 set to ON, the hardware check program is corrupted.	The Memory Card transfer program started up after this can be used. If operation is not restored after continuing with the Memory Card transfer program, insert the Memory Card containing the recovery program in the PT and reset the PT or turn the power supply OFF and ON again. (Refer to *3-6 Using Memory Cards* in the Setup Manual.) If the same problem occurs after reinstalling the system program, contact your nearest OMRON representative.
ERROR No. 12: Fail in loading fonts: Please reinstall the system program.	Reading of font files when operation performed with DIP switch 6 set to ON failed.	Download the system program by automatic download that does not use DIP switch 6. If operation is not restored after downloading, insert the Memory Card containing the recovery system program in BANK 1 in the PT. (Refer to *3-6 Using Memory Cards* in the Setup Manual.) If the same problem occurs after reinstalling the system program, contact your nearest OMRON representative.
ERROR No. 12: Installed system program is not applicable for this hardware: Please reinstall the system program.	The installed system program does not match the hardware.	
WARNING No. 20: Date and Time are not set: Touch the screen to continue.	Date set outside the PT's allowable range of 2000 to 2049.	Touch the touch panel to continue booting. Then set the correct date in the System Menu.

Message	Cause	Possible countermeasure
WARNING No. 21: SRAM previously broken... Initialization Complete: Touch the screen to continue.	SRAM contents could not be held because the battery was not connected or there was insufficient capacity. For this reason, SRAM was initialized.	Touch the touch panel to continue booting. Replace the battery the next time power is turned OFF.
WARNING No. 22: Memory Card Error: Some files in a memory card may be corrupted. Safely remove the memory card, and check whether files are not corrupted on a computer. You can continue to startup the PT by touching on the screen, however, it may NOT operate correctly when accessing to the memory card. (The same message will also be displayed in Japanese. This is not a fault.)	The two following causes are possible: The previous time the PT was used, power was turned OFF while accessing the Memory Card. Memory Card access safety information could not be held because the battery was connected or there was insufficient capacity.	Touch the touch panel to continue booting. When the Memory Card is accessed, however, the PT may not operate normally.
WARNING No. 23: Screen data file(s) is not correct: Touch the screen to continue and transfer screen data again.	The PT's FinsGateway could not be started up normally and was restarted with screen data transfer possible via serial communications.	Touch the PT's touch panel, and after *connecting* is displayed at the bottom right of the screen, or after the message "No project data is registered. Press OK button and download project data." is displayed, reattempt screen transfer via serial communications.

Errors while Connecting to the Host

Symptoms at PT	Causes	Measures
PT cannot communicate with the host (An error message is displayed or *connecting* is displayed at the bottom right of the screen)	The settings for Ethernet connection, such as node number, network number, and IP address, are not set correctly	Set the settings correctly, referring to *Section 5 Connecting to Host via Ethernet or Controller Link.*
	The protocol settings for the host and the settings at the PT do not match.	Set the communications settings using the NS-Designer
	The PT is not connected to the host properly.	Check that the type, length, and wiring of the connecting cables meet the specifications. (Refer to *Section 4 Connecting Host to Serial Port.*)
	For 1.N NT Link connections, two or more Units have the same unit number.	Reset so that each Unit has a unique unit number. (Refer to *6-6 Communications Settings.*)
	With the NS5, the *Expansion Interface* for serial port B is set to the expansion interface when the connection is to serial port B	Set the Expansion Interface to *Disable* on the Comm Tab Page from the NS5 System Menu

Errors during PT Operation

Symptoms at PT	Causes	Measures
RUN indicator does not light.	Power is not being supplied to the PT.	Check the connection points and supply power to the PT correctly (Refer to *3-1 Installing the PT.*)
	The fuse is broken.	Contact your nearest OMRON representative.
The screen is blank.	The PT is in system startup waiting status	This is not an error. Information will be displayed when the waiting time has lapsed.
	The screen saver function is operating.	This is not an error. Touch the screen, or operate the system memory for switching the screen from the host to switch the screen as follows: • Set the screen number in $SW0 • Set the pop-up screen number in $SW1, 4 and 7. (Refer to *2-4 System Memory* in the *PT Programming Manual* for details on the system memory)
	The backlight is OFF.	Turn ON the backlight by setting system memory bits $SB6 to 8 for adjusting backlight brightness to ON. (Refer to *2-4 System Memory* in the *PT Programming Manual* for details on the system memory.)
	The backlight has malfunctioned	The backlight must be replaced. Contact your nearest OMRON representative.

Symptoms at PT	Causes	Measures
The display update is slow	Screen switching, opening and closing pop-up screens, and switching frames are being performed frequently.	If screens are opened and closed frequently, the display update may take some time and communications may be delayed. Adjust the interval between screen switches so that the system is not overloaded.
	The message communications interval is too long.	On the NS-Designer, select ***Settings - System Setting***, click the **Comm-All** Tab, press the **Comm. Details** Button, and set a shorted communications interval. (Refer to *Section 7 System Settings* of the *NS-Designer Operation Manual.*)
The touch panel does not respond.	PT has malfunctioned due to external noise.	Reset the PT, and wire it according to noise prevention measures.
	The touch panel is damaged.	Test the touch panel using the hardware check in the System Menu. If an error has occurred, contact your nearest OMRON representative.
The display is dark.	The brightness setting is too low.	Increase the backlight brightness in the PT Tab Page of the System Menu.
	The backlight is faulty or its service life has expired.	The backlight must be replaced. Contact your nearest OMRON representative.
Cannot enter the device monitor function.	The communications settings are incorrect.	When using the device monitor, set the communications mode as follows: • C-series PLCs: 1:1 NT Link or 1:N NT Links • CS1-series PLCs: 1:N NT Links (normal, high speed) The device monitor function is not supported for Ethernet or Controller Link.
	The PLC does not support the device monitor function.	The PLCs that support the device monitor function are restricted. Check the PLC model being used. (Refer to *6-8-4 Device Monitor.*)

Errors during Object Operation

Symptoms at PT	Causes	Measures
The numerical and character string update is slow.	Communications are unstable due to external noise.	Perform noise countermeasures such as separating communications cables from power lines.
	There are too many Numeral Display & Input objects and String Display & Input objects in the display.	Reduce the number of Numeral Display & Input and String Display & Input objects in the screen where update is slow.
	For RS-422A communications, the branch is incorrect or the terminating resistance is not set properly.	Wire correctly, referring to *Appendix 4 Using NS-AL002 RS-232C/RS-422A Converters.*
	The host is processing a large volume of data and the cycle time is long.	Shorten the host cycle time.
	The message communications interval is too long.	On the NS-Designer, select ***Settings - System Setting***, click the **Comm-All** Tab, press the **Comm. Details** Button, and set a shorted communications interval. (Refer to *Section 7 System Settings* of the *NS-Designer Operation Manual.*)
Some objects in the screen configuration are not displayed.	A communications error has occurred.	Check the communications settings again.
Some objects in the screen configuration are not displayed.	The control flags set in the object include Hide Display Flags.	Display the control flags for the objects set to be not displayed, as follows: Display the Expansion Tab from the functional object property setting using the NS-Designer. Select *Display* from *Display/Hide* in the Control Flags Tab Page. Turn ON the indirect address of the control flag set for the object.
The Log Flag display does not match the actual log timing.	The communications address set for the event of log timing is turning ON and OFF at high speed.	Set the ON/OFF cycle of the communications address for events to a longer time.
Cannot input numerical values.	The numerical value input upper and lower limit check function is running.	Display the Expansion Tab from the functional object property setting using the NS-Designer. Check the set values in the Input Upper and Lower Limits Tab Page and correct if necessary.
Cannot input for some functional objects.	The control flags set in the objects include Input Prohibit Flags.	Display the Expansion Tab from the functional object property settings using the NS-Designer. Select *Enable* for *Input* in the Control Flag Tab Page. Turn ON the indirect address of the control flag set for the object.
	A password has been set.	Input the password in the password input dialog box that is displayed.

Symptoms at PT	Causes	Measures
The function of the functional object is not executed when pressed.	Input is disabled by the control flag.	Input is not possible when the functional object is set to be disabled. Correct the screen data using the NS-Designer. If the communications address set by the indirect specification is set to OFF, set the address to ON.
Cannot input to any functional object.	PT is set to input prohibit mode.	Set system memory bit $SB19 to OFF. Touch the screen and input the password to cancel disabling inputs.
Cannot move to System Menu.	Moving to System Menu is prohibited.	Set system memory bit $SB3 to OFF.
The list selection and bitmap object are blank.	There is no reference file.	Use the NS-Designer to check whether the folder storing project data contains a reference file, and resend the screen data to the PT.
	The number of rows specified in the first row of the list selection is above the maximum.	Set the number of rows to less than the maximum.

7-4 Requesting a Replacement PT

Always observe the following precautions when faults are detected during inspection and the PT is to be replaced.

- Create a backup of the PT project data.
  Project data may be deleted when the PT is repaired by OMRON.
- Always turn OFF the power before replacing the PT.
- After replacing the PT, check to confirm that the new PT has no faults.
- When returning a faulty PT for repair, include a document with the Unit that provides as many details on the fault as possible, and send to your OMRON representative.

Appendices

Appendix 1 Quick Reference A-2
Appendix 2 Specifications A-3
A-2-1 General Specifications A-3
A-2-2 Characteristics A-5
A-2-3 Communications Specifications A-6
Appendix 3 Dimensions A-10
Appendix 4 Using NS-AL002 RS-232C/RS-422A Converters A-16
A-4-1 Dimensions A-16
A-4-2 Mounting and Removing A-17
A-4-3 Specifications A-17
A-4-4 DIP Switch Settings A-18
A-4-5 Pin Arrangement A-19
A-4-6 Handling the Shield on RS-232C/485 Cables A-20
Appendix 5 Preparing Connecting Cables A-22
A-5-1 Cable Preparation A-22
A-5-2 Soldering A-23
A-5-3 Hood Assembly A-23
A-5-4 Preparing Connecting Cables for Host Connection A-24
Appendix 6 Preparing Cables for Computer Connection A-26
A-6-1 Connecting Cable Assembly A-26
Appendix 7 Preparing Connecting Cables for Bar Code Readers A-28
Appendix 8 Standard Models A-30
Appendix 9 List of Optional Products A-41
A-9-1 Anti-reflection Sheets: NS12-KBA04, NS7-KBA04, NT30-KBA04 ..... A-41
A-9-2 Protective Cover: NS12-KBA05, NS7-KBA05 ..... A-41
A-9-3 NT30-KBA01 Chemical-resistant Cover A-42
A-9-4 Replacement Battery: CJ1W-BAT01 ..... A-42
A-9-5 Recommended Memory Cards: A-42
A-9-6 Recommended Memory Card Adapter: HMC-AP001 ..... A-42
A-9-7 NS-CLK21 Controller Link Interface Unit A-43
A-9-8 NS-CA001 Video Input Unit A-43
Appendix 10 System Memory List A-44
Appendix 11 Differences between "–V1" Models and Other Models A-47
Appendix 12 NS5 System Menu A-48

Appendix 2 Specifications

A-2-1 General Specifications

Item	Specifications			
	NS12-TS0□-V1	NS10-TV0□-V1	NS8-TV0□-V1	NS5-SQ0□-V1
Rated power supply voltage	24 VDC			
Allowable voltage range	20.4 to 27.6 VDC (24 VDC ±15 %)			
Allowable input power interruption time	No restriction.			
Power consumption	25 W max			15 W max.
Ambient operating temperature	0 to 50°C (See notes 1 and 2.)			
Storage temperature	–20 to 60°C (See note 2.)			
Ambient operating humidity]	35% to 85% (0 to 40°C) with no condensation 35% to 60% (40 to 50°C) with no condensation			
Operating environment	No corrosive gases.			
Noise immunity	Conforms to IEC61000-4-4, 2 KV (power lines)			
Vibration resistance (during operation)	10 to 57 Hz with 0.075 mm amplitude and 57 to 150 Hz with 9.8 m/s^2 acceleration for 30 min in each of X, Y, and Z directions			
Shock resistance (during operation)	147 m/s^2 3 times in each of X, Y, and Z directions.			
Dimensions	315 × 241 × 48.5 mm (W × H × D)		232 × 177 × 48.5 mm (W × H × D)	195 × 142 × 54 mm (W × H × D)
Panel cutout dimensions	Width 302 $^{+1}_{0}$ × Height 228 $^{+1}_{0}$ mm Panel thickness: 1.6 to 4.8 mm	Width 302 $^{+1}_{0}$ × Height 228 $^{+1}_{0}$ mm Panel thickness: 1.6 to 4.8 mm	Width 220.5 $^{+0.5}_{0}$ × Height 165.5 $^{+0.5}_{0}$ mm Panel thickness: 1.6 to 4.8 mm	Width 184 $^{+0.5}_{0}$ × Height 131 $^{+0.5}_{0}$ mm Panel thickness: 1.6 to 4.8 mm
Weight	2.5 kg max.		2.0 kg max.	1.0 kg max.
Enclosure rating	Front panel: Equivalent to IP65F (NEMA4) (See note 3.)			
Battery life	5 years (at 25°C) The SRAM and RTC will be backed up for 5 days after the battery runs low (indicator lights orange). The SRAM and RTC will be backed up by a super capacitor for 5 minutes after removing the old battery (i.e., after turning ON power after 5 minutes).			
International standards	UL 1604 Class 1 Division 2, EC Directives			

Note 1. The operating temperature is subject to the following restrictions, depending on the mounting angle and whether an Expansion Unit is installed or not.

- Without any Expansion Unit Installed
  - NS12-V1/NS10-V1/NS8-V1
    Mounting angle of 0° to less than 30° to the horizontal:
    Operating temperature range of 0 to 45°C
    Mounting angle of 30° to 90° or less to the horizontal:
    Operating temperature range of 0 to 50°C
  - NS5 -V1
    Mounting angle of 0° to 90° or less to the horizontal:
    Operating temperature range of 0 to 50°C

- With an Expansion Unit (Video Input Unit or Controller Link Unit) Installed
  - NS12-V1/NS10-V1
    Mounting angle of 0° to less than 30° to the horizontal:
    Operating temperature range of 0 to 35°C
    Mounting angle of 30° to 90° or less to the horizontal:
    Operating temperature range of 0 to 50°C
  - NS8-V1
    Mounting angle of 0° to less than 30° to the horizontal:
    Operating temperature range of 0 to 35°C
    Mounting angle of 30° to less than 90° to the horizontal:
    Operating temperature range of 0 to 45°C
    Mounting angle of 90° to the horizontal:
    Operating temperature range of 0 to 50°C

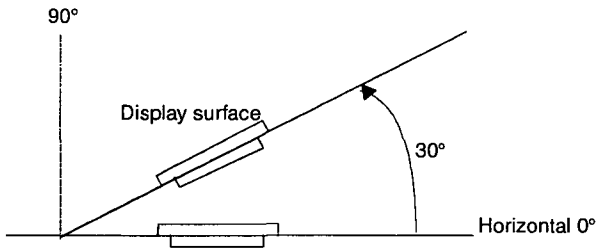

2. Operate the PT within the temperature and humidity ranges shown in the following diagram.

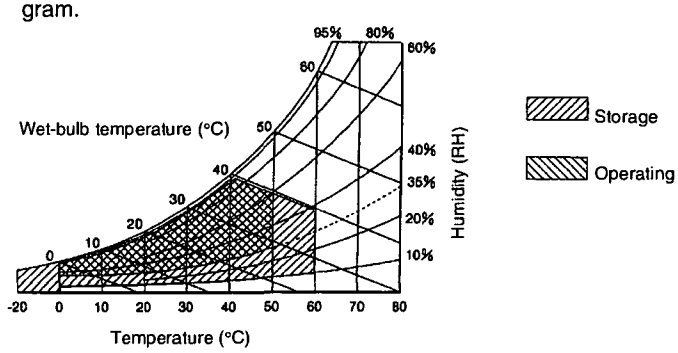

3. May not be applicable in locations with long-term exposure to oil.

A-2-2 Characteristics

● Display Specifications

Item		Specifications			
		NS12-TS0□-V1	NS10-TV0□-V1	NS8-TV0□-V1	NS5-SQ0□-V1
Display panel	Display device	High-definition TFT color LCD			STN color LCD
	Number of dots	800 dot horizontal × 600 dot vertical	640 dot horizontal × 480 dot vertical	640 dot horizontal × 480 dot vertical	320 dot horizontal × 240 dot vertical
	Display color	256 colors (32,000 colors for BMP/JPEG images, NS5: 4,096 colors for BMP/JPEG images)			
	Display area	Width 246.0 mm × height 184.5 mm (12.1 inches)	Width 215.2 mm × height 162.4 mm (10.4 inches)	Width 162.2 mm × height 121.7 mm (8.0 inches)	Width 117.2 mm × height 88.4 mm (5.7 inches)
	View angle	Left/right ±60° Top 45°, bottom 55°	Left/right ±60° Top 35°, bottom 65°	Left/right ±65° Top 55°, bottom 65°	Left/right ±50° Top 30°, bottom 50°
Backlight (See note 4.)	Life expectancy	50,000 hours min. (See note 1.)		40,000 hours min. (See note 1.)	50,000 hours min. (See note 1.)
	Brightness adjustment	There are 3 levels of adjustment by operating the touch panel. (See note 2.)			
	Backlight error detection	Error is detected automatically, and the RUN indicator flashes green as notification. (See note 3.)		No detection function.	
Front panel indicators	RUN	Lit green: PT is operating normally. The Memory Card transfer has ended normally or a backlight error was detected immediately after power was turned ON. (Backlight errors are not detected with the NS8/NS5.) Immediately after power turns ON, indicates file system check in progress, battery low, or disconnected and operating normally. Memory Card transfer in progress. Memory Card transfer has ended abnormally.			

Note 1. This is the estimated time before brightness is reduced by half at room temperature and humidity. It is not a guaranteed value. (It is based on the middle brightness setting using the NS8.)
The life expectancy will be drastically shortened if PT is used at low temperatures. For example, using the PT at temperatures of 0°C will reduce the life expectancy to approximately 10,000 hours (reference value).
2. The brightness cannot be adjusted much.
3. This function does not detect service life expectancy.
It detects when the backlight is not lit due to a disconnection or other errors. Backlight error detection indicates that all backlights (2) are OFF.
4. Contact your nearest OMRON representative to replace the backlight.

Appendix 3 Dimensions

● NS12/NS10-V1 (Includes Mounting Dimensions)

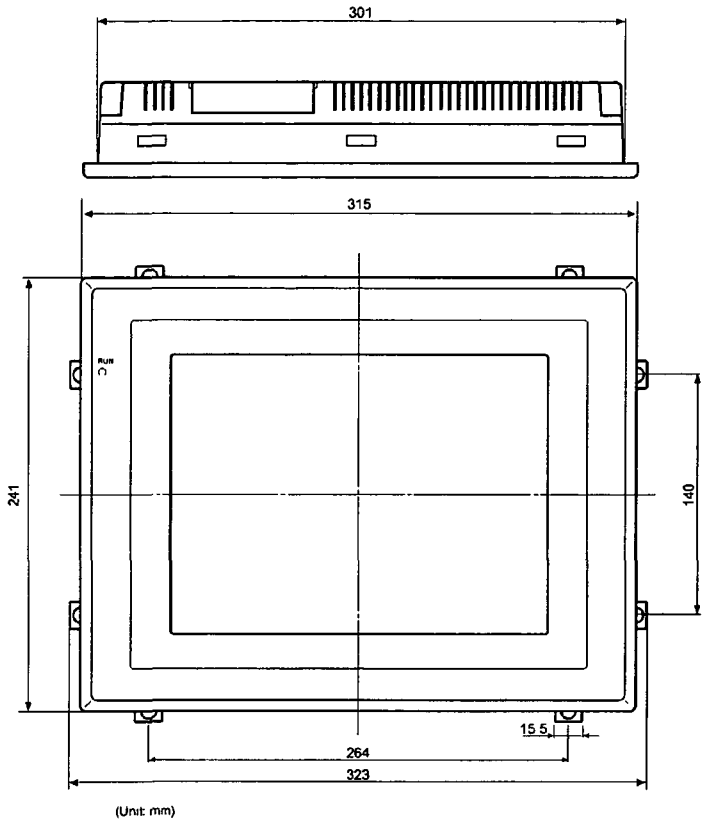

With Controller Link Interface Unit Mounted

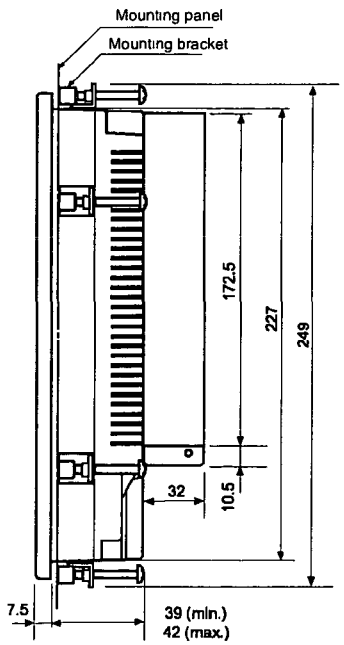

With Video Input Unit Mounted

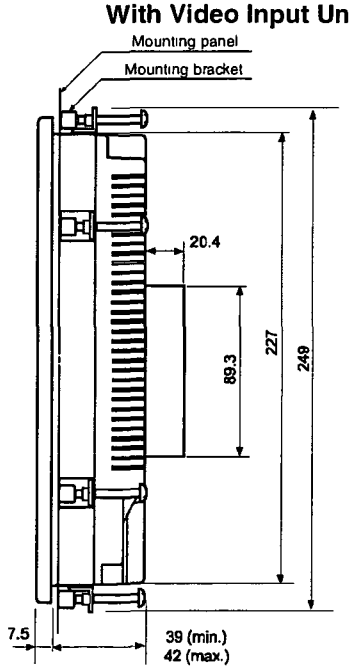

● NS12/NS10-V1 Cable Connection Dimensions

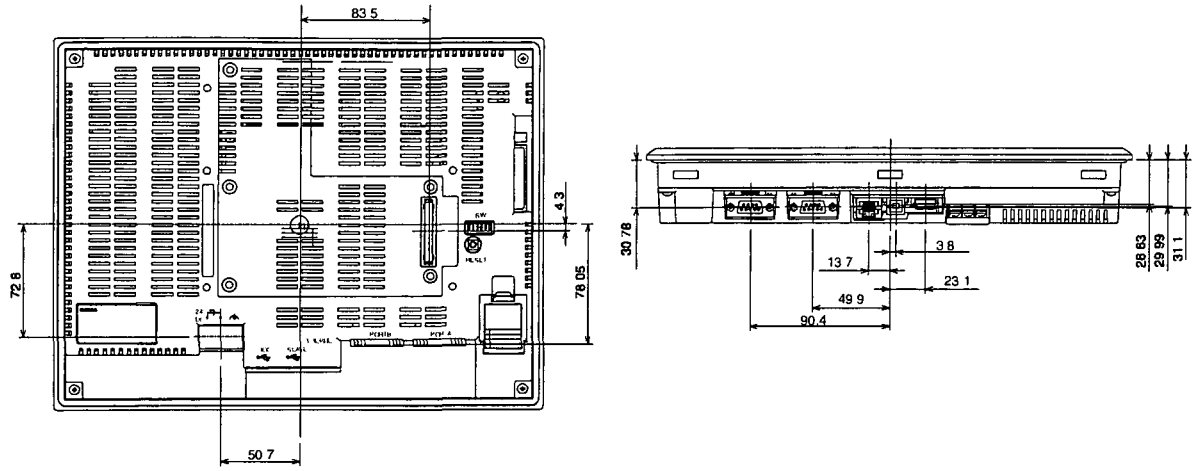

● NS12/NS10 (without "V1") Cable Connection Dimensions

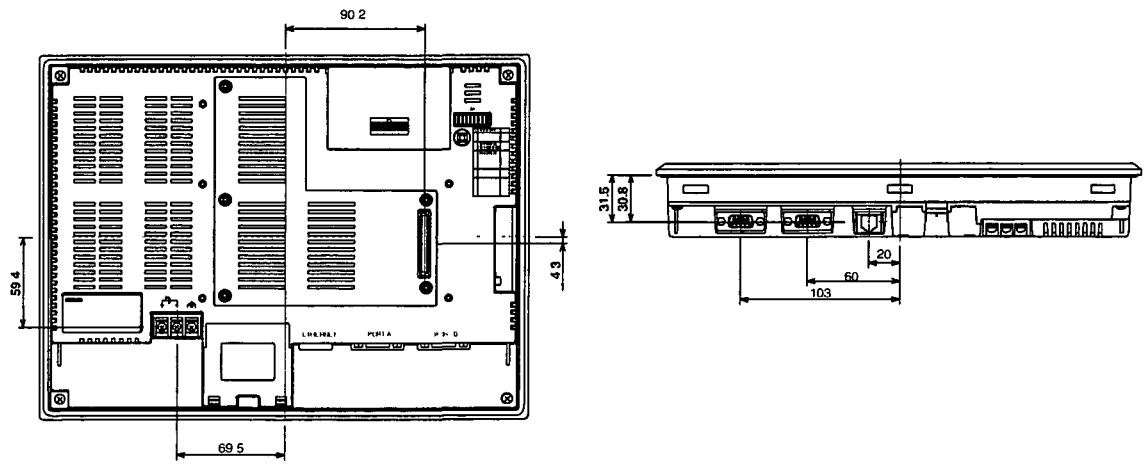

● NS8-V1 Cable Connection Dimensions

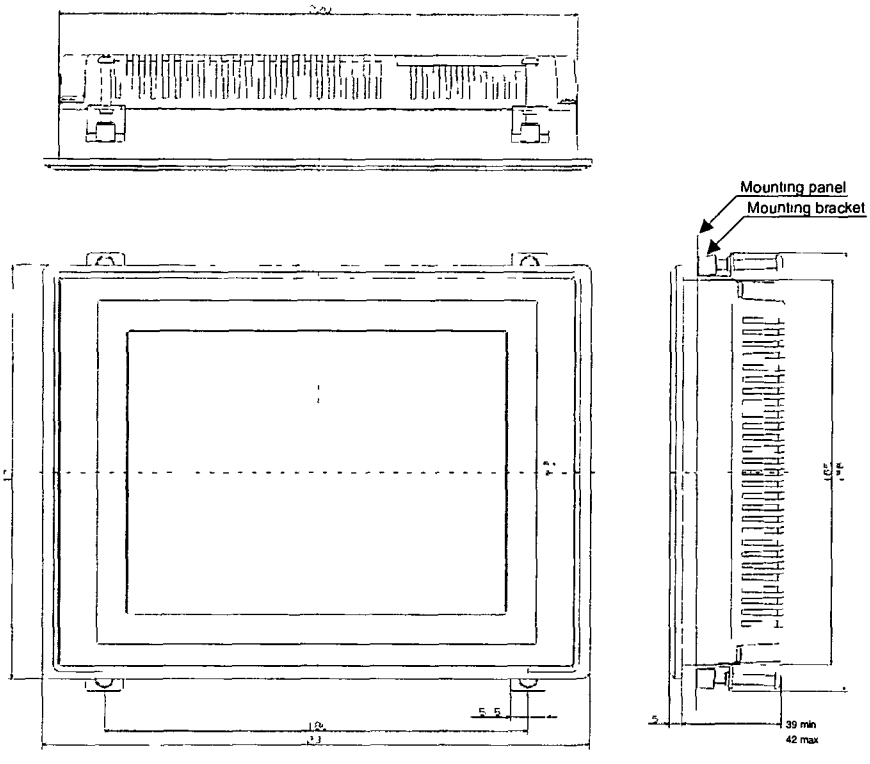

(Unit: mm)

● NS8-V1 Cable Connection Dimensions

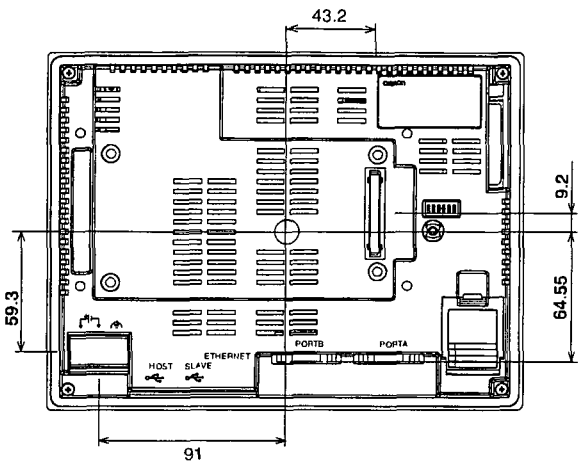

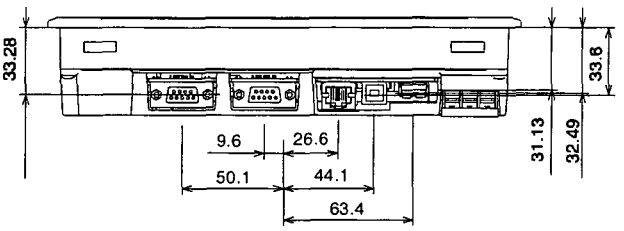

● NS7 Cable Connection Dimensions

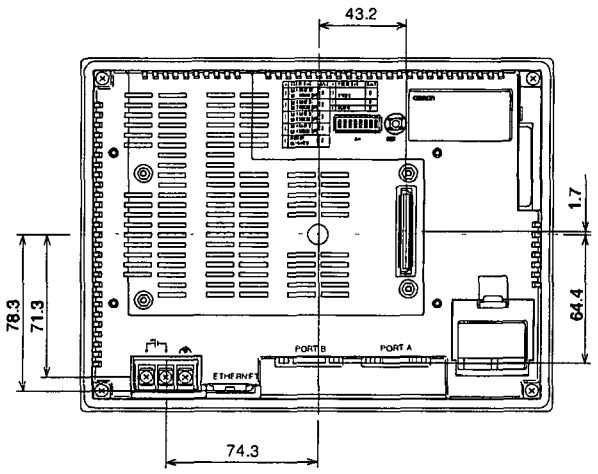

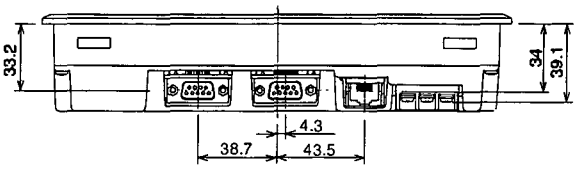

● NS5-V1 Dimensions

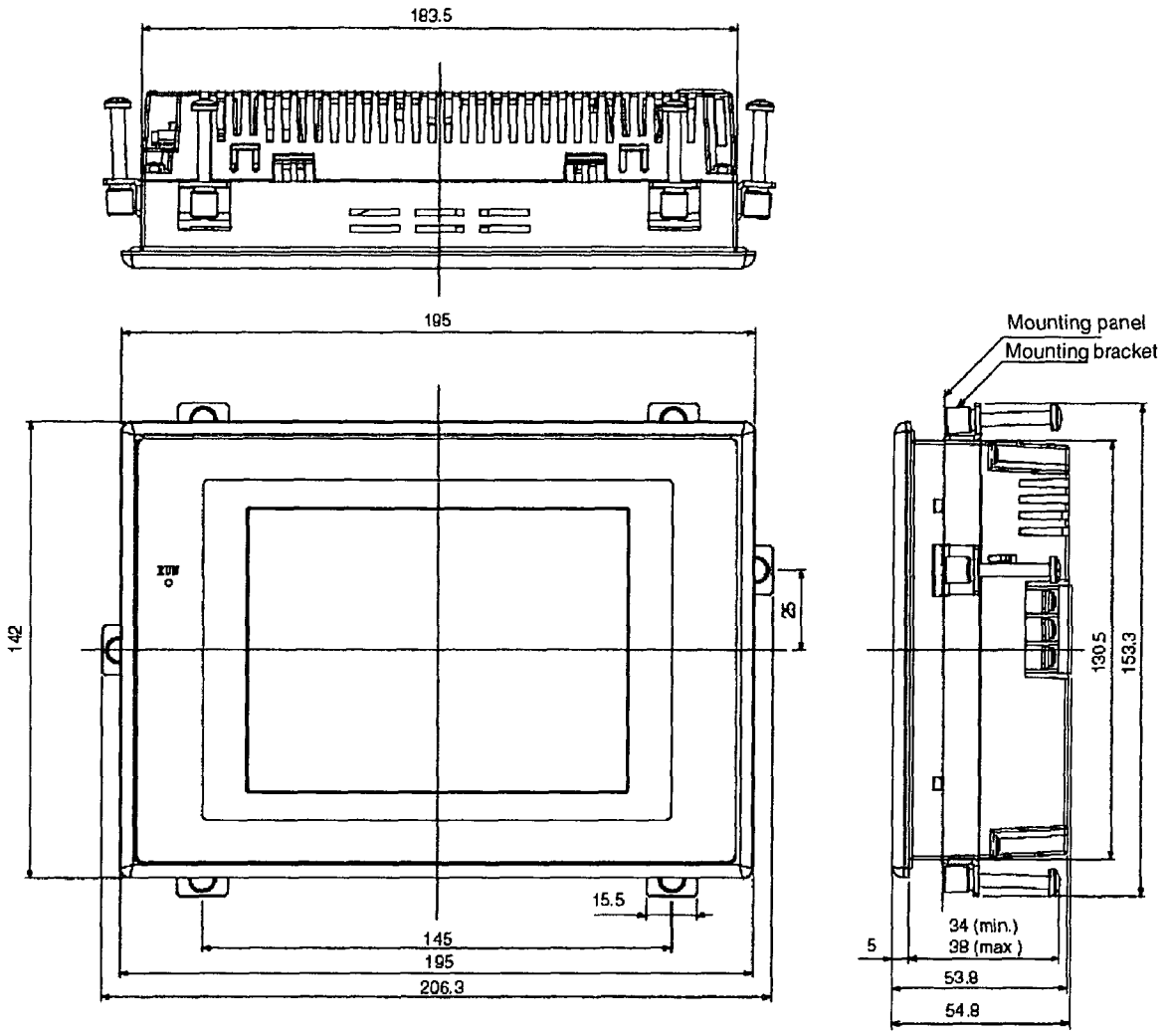

● NS5-V1 Cable Connection Dimensions

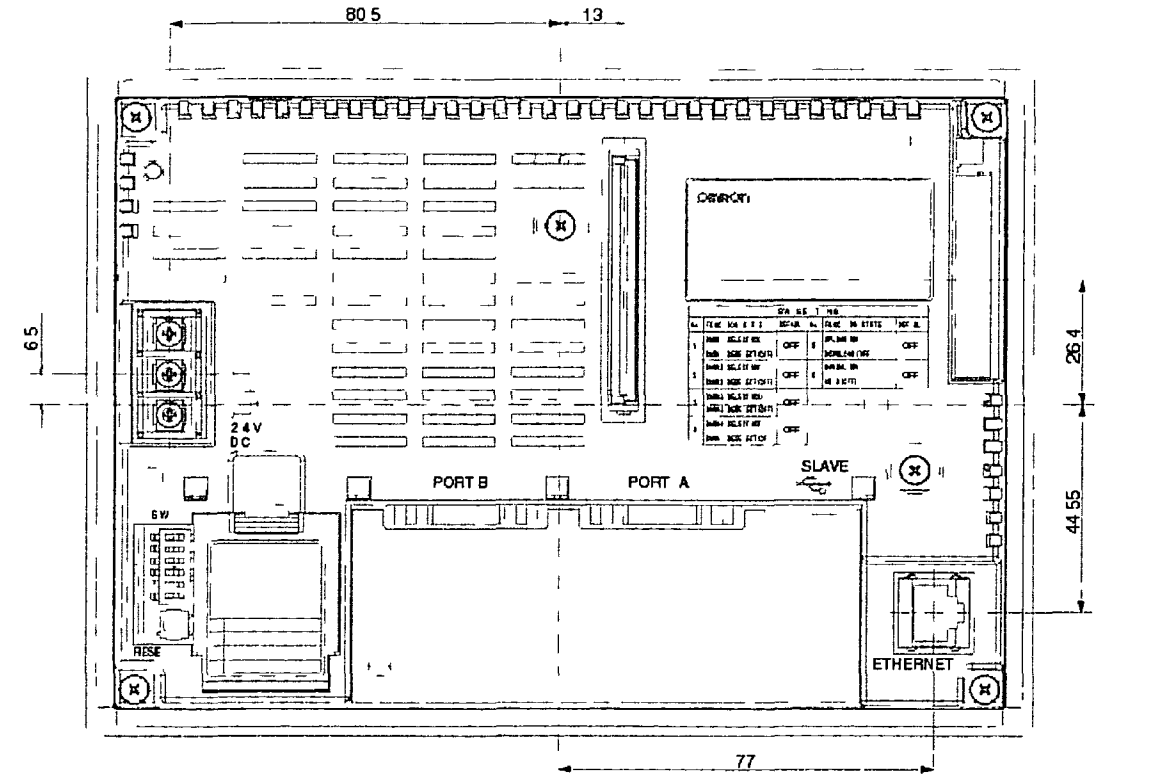

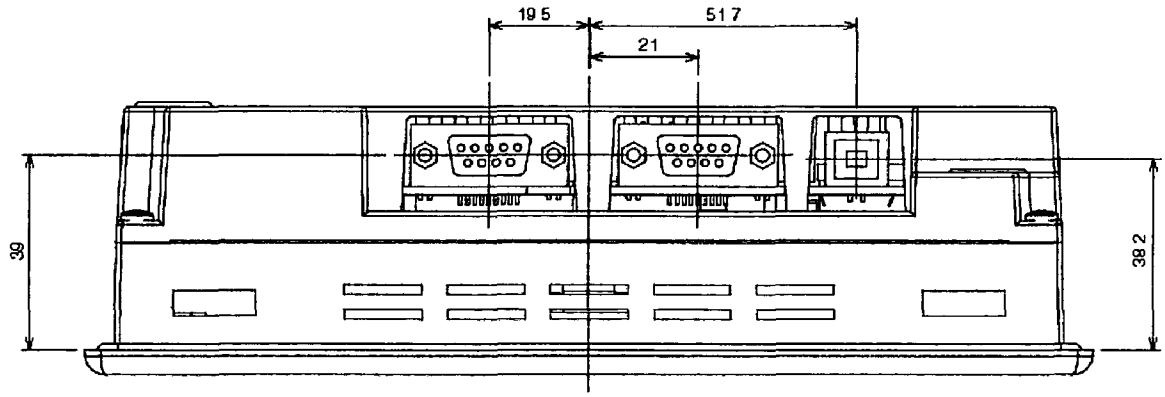

Appendix 8 Standard Models

Programmable Terminals (PTs)

Model	LCD				Ethernet	Pre-install system		Case
	Type	Size	Color	Number of dots		Language	Applicable PLC	Color
NS12-TS01-V1	TFT	12.1 inch	Color	800 × 600	10/100Base-T	English/ Japanese	OMRON	Ivory
NS12-TS01B-V1	TFT	12.1 inch	Color	800 × 600	10/100Base-T	English/ Japanese	OMRON	Black
NS12-TS00-V1	TFT	12.1 inch	Color	800 × 600	Not supported.	English/ Japanese	OMRON	Ivory
NS12-TS00B-V1	TFT	12.1 inch	Color	800 × 600	Not supported.	English/ Japanese	OMRON	Black
NS10-TV01-V1	TFT	10.4 inch	Color	640 × 480	10/100Base-T	English/ Japanese	OMRON	Ivory
NS10-TV01B-V1	TFT	10.4 inch	Color	640 × 480	10/100Base-T	English/ Japanese	OMRON	Black
NS10-TV00 - V1	TFT	10.4 inch	Color	640 × 480	Not supported.	English/ Japanese	OMRON	Ivory
NS10-TV00B-V1	TFT	10.4 inch	Color	640 × 480	Not supported.	English/ Japanese	OMRON	Black
NS8-TV01-V1	TFT	8.0 inch	Color	640 × 480	10/100Base-T	English/ Japanese	OMRON	Ivory
NS8-TV01B-V1	TFT	8.0 inch	Color	640 × 480	10/100Base-T	English/ Japanese	OMRON	Black
NS8-TV00 - V1	TFT	8.0 inch	Color	640 × 480	Not supported.	English/ Japanese	OMRON	Ivory
NS8-TV00B-V1	TFT	8.0 inch	Color	640 × 480	Not supported.	English/ Japanese	OMRON	Black
NS5-SQ01-V1	STN	5.7 inch	Color	320 × 240	10/100Base-T	English/ Japanese	OMRON	Ivory
NS5-SQ01B-V1	STN	5.7 inch	Color	320 × 240	10/100Base-T	English/ Japanese	OMRON	Black
NS5-SQ00-V1	STN	5.7 inch	Color	320 × 240	Not supported.	English/ Japanese	OMRON	Ivory
NS5-SQ00B-V1	STN	5.7 inch	Color	320 × 240	Not supported.	English/ Japanese	OMRON	Black

Serial Communications Units

Model	Specifications	Applicable PLC
CS1W-SCU21	• RS-232C (2 ports) • Base-mounting type	CS-series CS1G/H and CS1G/H-H
CS1W-SCU41	• RS-232C (1 port) • RS-422A (1 port) • Base-mounting type	CS-series CS1G/H and CS1G/H-H
CJ1W-SCU41	• RS-232C (1 port) • RS-422A (1 port) • Building-block type	CJ-series CJ1G/H-H and CJ1M

Appendix 9 List of Optional Products

A-9-1 Anti-reflection Sheets: NS12-KBA04, NS7-KBA04, NT30-KBA04

Attached to the display to prevent random reflection and dirt. The sheets are all colorless and transparent. One set contains five sheets.

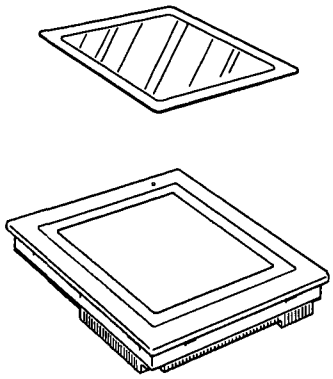

Model	Specifications
NS12-KBA04	Anti-reflection Sheets for NS12-V1/NS10-V1
NS7-KBA04	Anti-reflection Sheets for NS8-V1
NT30-KBA04	Anti-reflection Sheets for NS5-V1

A-9-2 Protective Cover: NS12-KBA05, NS7-KBA05

This cover is transparent and protects the display surface from oil, dust, and finger marks.

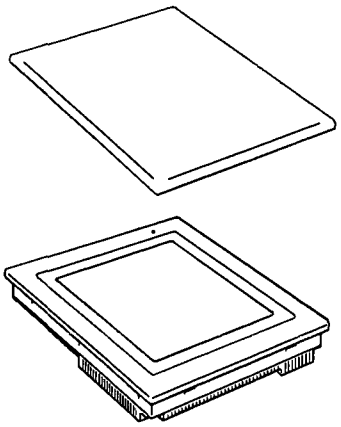

Material	Polyester film
Fitting method	Double-sided tape

Model	Specifications
NS12-KBA05	Protective Cover for NS12-V1 and NS10-V1
NS7-KBA05	Protective Cover for NS8-V1

A-9-3 NT30-KBA01 Chemical-resistant Cover

This Cover on the front panel protects the Unit from chemicals. The whole sheet is opaque white and made from silicon rubber.

Model	Specifications
NT30-KBA01	Chemical-resistant Cover for the NS5-V1

A-1-4 Replacement Battery: CJ1W-BAT01

This is a lithium battery for backing up the contents of the memory.

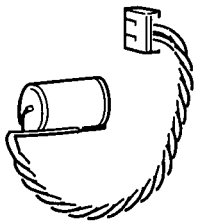

CJ1W-BAT01

Model	Specifications
CJ1W-BAT01	Replacement Battery for NS12-V1/NS10-V1/NS8-V1/NS5-V1

A-9-5 Recommended Memory Cards:

HMC-EF172, HMC-EF372, and HMC-EF672

A-9-6 Recommended Memory Card Adapter: HMC-AP001

The Memory Card is an external memory that can save and read screen data, log data, and system programs between the PT and computer. By using the HMC-AP001, this data can be exchanged with computers that are connected to PC Cards.
The memory capacity depends on the model of the Memory Card used.

Model	Capacity
HMC-EF172	15 Mbytes
HMC-EF372	30 Mbytes
HMC-EF672	64 Mbytes

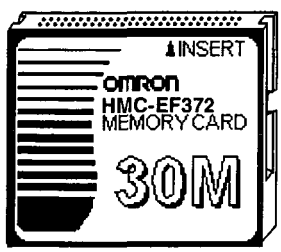

Cat. No. W393-E3-04

SYSMAC CJ Series

CJ1G/H-CPU□□H, CJ1M-CPU□□, CJ1G-CPU□□

Programmable Controllers

OPERATION MANUAL

OMRON

C1

SYSMAC CJ Series
CJ1G/H-CPU□□H, CJ1M-CPU□□, CJ1G-CPU□□
Programmable Controllers
Operation Manual

Revised September 2003

Notice:

OMRON products are manufactured for use according to proper procedures by a qualified operator and only for the purposes described in this manual.

The following conventions are used to indicate and classify precautions in this manual. Always heed the information provided with them. Failure to heed precautions can result in injury to people or damage to property.

⚠DANGER Indicates an imminently hazardous situation which, if not avoided, will result in death or serious injury.

⚠WARNING Indicates a potentially hazardous situation which, if not avoided, could result in death or serious injury.

⚠Caution Indicates a potentially hazardous situation which, if not avoided, may result in minor or moderate injury, or property damage.

OMRON Product References

All OMRON products are capitalized in this manual. The word "Unit" is also capitalized when it refers to an OMRON product, regardless of whether or not it appears in the proper name of the product.

The abbreviation "Ch," which appears in some displays and on some OMRON products, often means "word" and is abbreviated "Wd" in documentation in this sense.

The abbreviation "PLC" means Programmable Controller. "PC" is used, however, in some Programming Device displays to mean Programmable Controller.

Visual Aids

The following headings appear in the left column of the manual to help you locate different types of information.

Note Indicates information of particular interest for efficient and convenient operation of the product.

1,2,3... 1. Indicates lists of one sort or another, such as procedures, checklists, etc.

© OMRON Electronics LLC 2001-2003

All rights reserved No part of this publication may be reproduced, stored in a retrieval system, or transmitted, in any form, or by any means, mechanical, electronic, photocopying, recording, or otherwise, without the prior written permission of OMRON.

No patent liability is assumed with respect to the use of the information contained herein Moreover, because OMRON is constantly striving to improve its high-quality products, the information contained in this manual is subject to change without notice Every precaution has been taken in the preparation of this manual. Nevertheless, OMRON assumes no responsibility for errors or omissions. Neither is any liability assumed for damages resulting from the use of the information contained in this publication

3-1 CPU Units

3-1-1 Models

CJ1-H CPU Units

I/O points	Expansion Racks	Program capacity	Data Memory (DM + EM)	LD instruction processing time	Model	Weight
2,560	3 max.	120 Ksteps	256 Kwords	0.02 μs	CJ1H-CPU66H	200 g max.
		60 Ksteps	128 Kwords		CJ1H-CPU65H	
		60 Ksteps	128 Kwords	0.04 μs	CJ1G-CPU45H	190 g max.
1,280	3 max.	30 Ksteps	64 Kwords		CJ1G-CPU44H	
960	2 max.	20 Ksteps	64 Kwords		CJ1G-CPU43H	
		10 Ksteps	64 Kwords		CJ1G-CPU42H	

CJ1M CPU Units

I/O points	Expansion Racks	Program capacity	Data Memory (DM + EM)	LD instruction processing time	Pulse I/O	Model	Weight
640	1	20 Ksteps	32 Kwords	0.1 μs	Yes	CJ1M-CPU23	170 g max.
320	None	10 Ksteps				CJ1M-CPU22	
640	1	20 Ksteps			No	CJ1M-CPU13	120 g max.
320	None	10 Ksteps				CJ1M-CPU12	

CJ1 CPU Units

I/O points	Expansion Racks	Program capacity	Data Memory (DM + EM)	LD instruction processing time	Model	Weight
1,280	3 max.	60 Ksteps	128 Kwords	0.08 μs	CJ1G-CPU45	200 g max.
		30 Ksteps	64 Kwords		CJ1G-CPU44	

3-1-2 Components

CJ1 and CJ1-H CPU Units

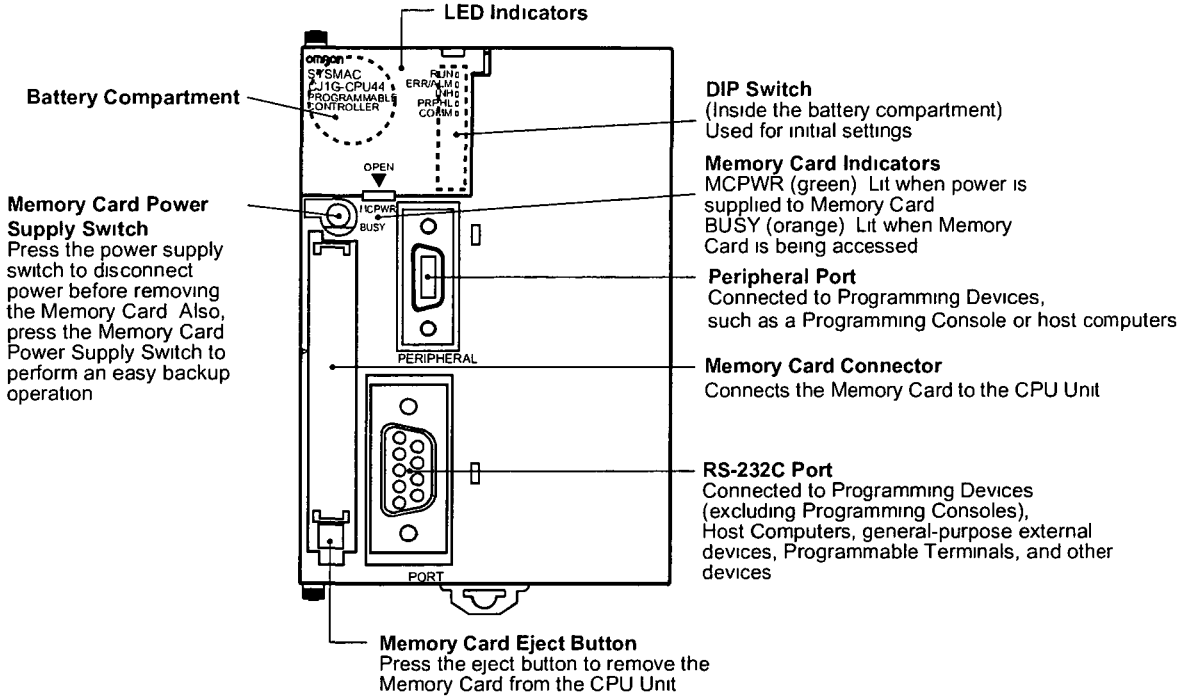

Note Always connect the connector covers to protect them from dust when not using the peripheral or RS-232C port.

CJ1M CPU Units

Models without Built-in I/O (CJ1M-CPU1□)

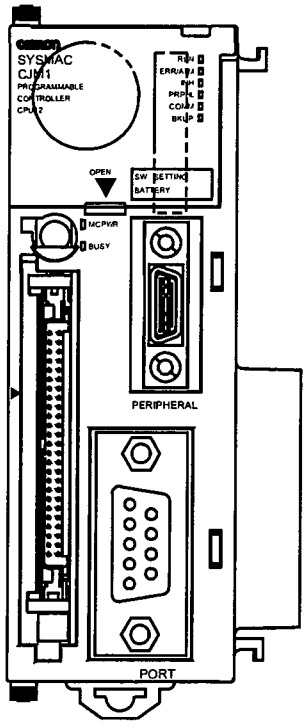

Note The nomenclature and functions are the same as for the CJ1 and CJ1-H CPU Units above.

Models with Built-in I/O (CJ1M-CPU2□)

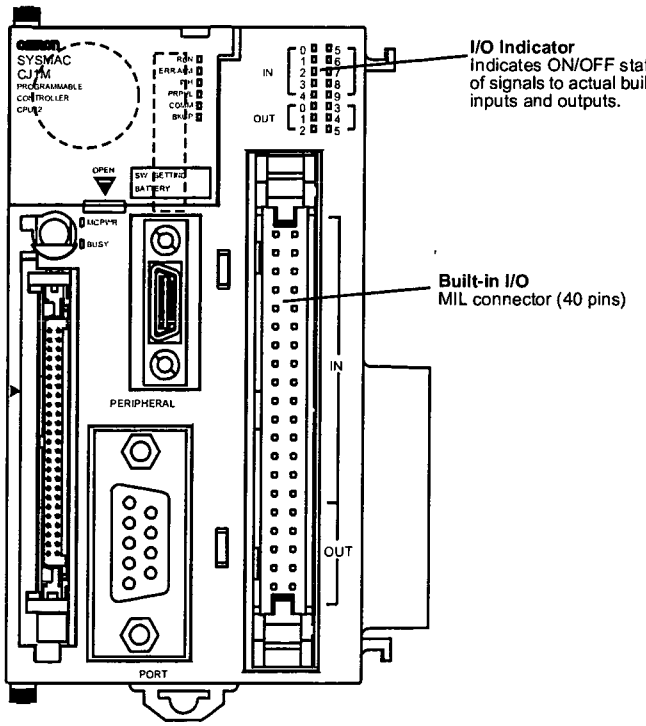

Note All nomenclature and functions other than those shown in the above diagram are the same as for CJ1 and CJ1-H CPU Units.

Indicators

The following table describes the LED indicators located on the front panel of the CPU Units.

Indicator	Color	Status	Meaning
RUN	Green	ON	PLC is operating normally in MONITOR or RUN mode.
		Flashing	System download mode error or DIP switch settings error.
		OFF	PLC has stopped operating while in PROGRAM mode, or has stopped operating due to a fatal error, or is downloading data from the system.
ERR/ALM	Red	ON	A fatal error has occurred (including FALS instruction execution), or a hardware error (watchdog timer error) has occurred. The CPU Unit will stop operating, and the outputs from all Output Units will turn OFF.
		Flashing	A non-fatal error has occurred (including FAL instruction execution) The CPU Unit will continue operating.
		OFF	CPU Unit is operating normally.
INH	Orange	ON	Output OFF Bit (A50015) has been turned ON. The outputs from all Output Units will turn OFF.
		OFF	Output OFF Bit (A50015) has been turned OFF.
PRPHL	Orange	Flashing	CPU Unit is communicating (sending or receiving) via the peripheral port.
		OFF	CPU Unit is not communicating via the peripheral port.
COMM	Orange	Flashing	CPU Unit is communicating (sending or receiving) via the RS-232C port.
		OFF	CPU Unit is not communicating via the RS-232C port.
BKUP (CJ1-H CPU Units only)	Orange	ON	User program and parameter area data is being backed up to flash memory in the CPU Unit or being restored from flash memory. **Note** Do not turn OFF the power supply to the PLC while this indicator is lit.
		OFF	Data is not being written to flash memory.

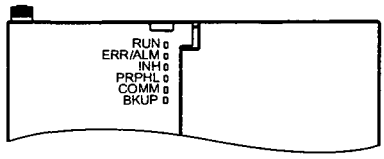

Indicator	Color	Status	Meaning
MCPWR	Green	ON	Power is being supplied to the Memory Card.
		Flashing	Flashes once: Easy backup read, write, or verify normal Flashes five times: Easy backup write malfunction Flashes three times: Easy backup write warning Flashes continuously: Easy backup read or verify malfunction
		OFF	Power is not being supplied to the Memory Card.
BUSY	Orange	Flashing	Memory Card is being accessed.
		OFF	Memory Card is not being accessed.

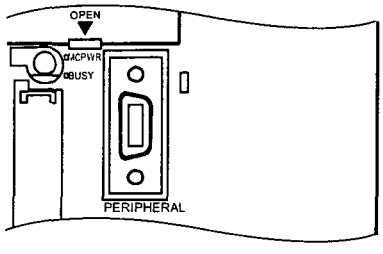

DIP Switch

The CJ-series CPU Unit has an 8-pin DIP switch that is used to set basic operational parameters for the CPU Unit. The DIP switch is located under the cover of the battery compartment. The DIP switch pin settings are described in the following table.

Pin no.	Setting	Function	Usage	Default
1	ON	Writing disabled for user program memory. (See note.)	Used to prevent programs from being accidently overwritten from Programming Devices (including Programming Console).	OFF
	OFF	Writing enabled for user program memory.		
2	ON	The user program is automatically transferred from the Memory Card when power is turned ON.	Used to store the programs in the Memory Card to switch operations, or to automatically transfer programs at power-up (Memory Card ROM operation). **Note** When pin 7 is ON and pin 8 is OFF, easy backup reading from the Memory Card is given priority, so even if pin 2 is ON, the user program is not automatically transferred from the Memory Card when power is turned ON.	OFF
	OFF	The user program is not automatically transferred from the Memory Card when power is turned ON.		
3	---	Not used.	---	OFF
4	ON	Peripheral port communications parameters set in the PLC Setup are used.	Turn ON to use the peripheral port for a device other than Programming Console or CX-Programmer (Peripheral bus only).	OFF
	OFF	Peripheral port communications parameters set using Programming Console or CX-Programmer (Peripheral bus only) are used.		
5	ON	RS-232C port communications parameters set using a CX-Programmer (Peripheral bus only) are used.	Turn ON to use the RS-232C port for a Programming Device.	OFF
	OFF	RS-232C port communications parameters set in the PLC Setup are used.		
6	ON	User-defined pin. Turns OFF the User DIP Switch Pin Flag (A39512).	Set pin 6 to ON or OFF and use A39512 in the program to create a user-defined condition without using an I/O Unit.	OFF
	OFF	User-defined pin. Turns ON the User DIP Switch Pin Flag (A39512).		
7	ON	Writing from the CPU Unit to the Memory Card.	Press and hold the Memory Card Power Supply Switch for three seconds.	OFF
		Restoring from the Memory Card to the CPU Unit.	To read from the Memory Card to the CPU Unit, turn ON the PLC power. This operation is given priority over automatic transfer (pin 2 is ON) when power is ON.	
	OFF	Verifying contents of Memory Card.	Press and hold the Memory Card Power Supply Switch for three seconds.	
8	OFF	Always OFF.		OFF

Note

1. The following data cannot be overwritten when pin 1 is ON:
   - All parts of the user program (programs in all tasks)
   - All data in the parameter area (such as the PLC Setup and I/O table)

   When pin 1 is ON, the user program and parameter area will not be cleared when the memory clear operation is performed from a Programming Device.
2. The CPU Unit will not enter any mode except PROGRAM mode after backing up data to a Memory Card using DIP switch pin 7. To enter RUN or MONITOR mode, turn OFF the power supply, turn OFF pin 7, and then restart the PLC. This will enable changing the operating mode as normal.

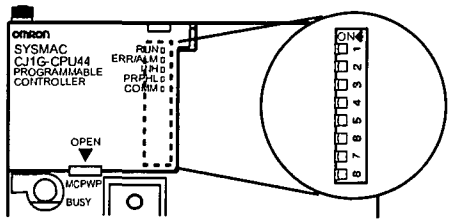

Note The language displayed for the CJ-series CPU Units is not set on the DIP switch, but rather is set using Programming Console keys.

3-1-3 CPU Unit Memory Block Map

The memory of CJ-series CPU Units is configured in the following blocks.

- I/O Memory: The data areas accessible from the user program
- User Memory: The user program and parameter areas (See Note 1.)

CPU Unit memory is backed up as shown in the following table.

Area	CJ1 CPU Units	CJ1-H CPU Units	CJ1M CPU Units
User memory	Battery	Flash memory	Flash memory
I/O memory	Battery	Battery	Battery

Areas Backed-up by Battery

If the battery voltage is low, the data in these areas will be lost. The CPM2A-BAT01 Battery is used for CJ1 and CJ1-H CPU Units and the CJ1W-BAT01 Battery is used for CJ1M CPU Units.

Areas Backed-up by Flash Memory

The data in these areas will not be lost even if the battery voltage is low. The CJ1-H and CJ1M CPU Units have a built-in flash memory to which the user program and parameter area data are backed up whenever the user memory is written to, including data transfers and online editing from a Programming Device (CX-Programmer or Programming Console), data transfers from a Memory Card, etc. The user program and the parameter area data will thus not be lost when using a CJ1-H or CJ1M CPU Unit.

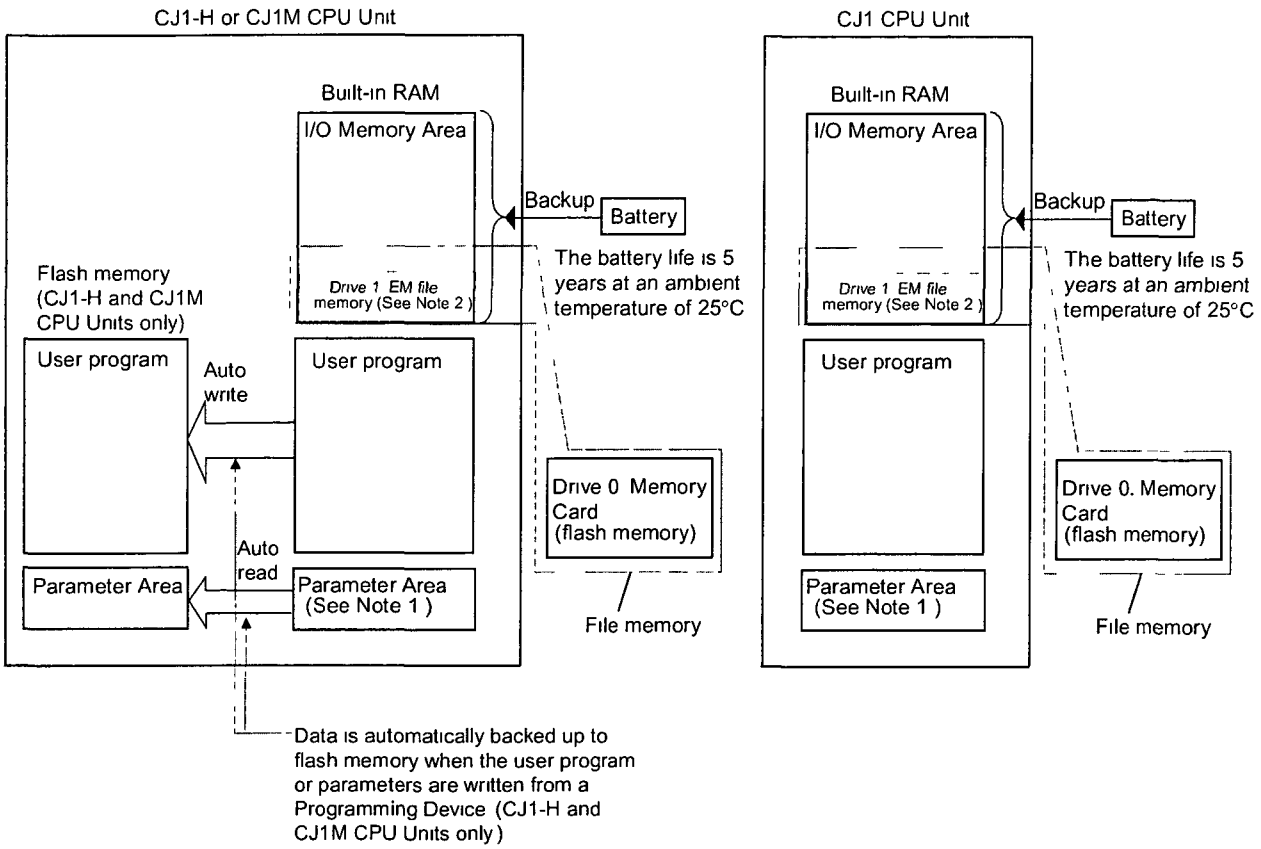

Note

1. The Parameter Area stores system information for the CPU Unit, such as the PLC Setup. An attempt to access the Parameter Area by an instruction will generate an illegal access error.
2. Part of the EM (Extended Data Memory) Area can be converted to file memory to handle data files and program files in RAM memory format, which has the same format as Memory Cards. Both EM file memory or memory cards can be treated as file memory (i.e., can be used to store files).

Opening the Battery Compartment Cover

Insert a small flat-blade screwdriver into the opening at the bottom of the battery compartment cover and lift open the cover.

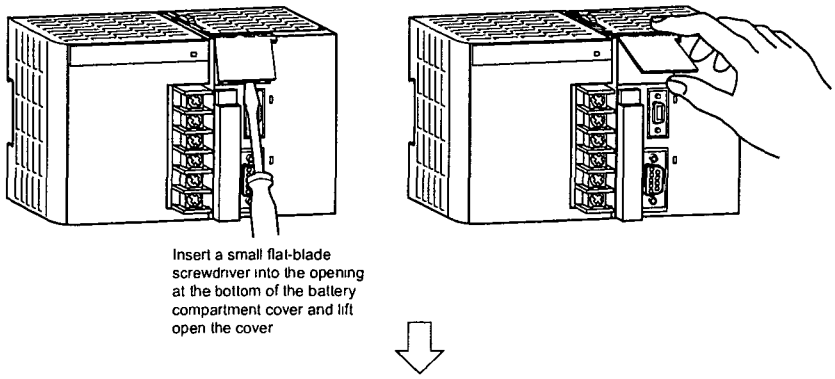

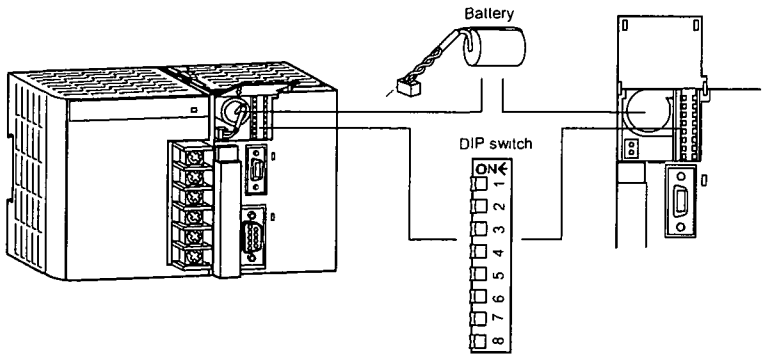

Orient the battery as shown below

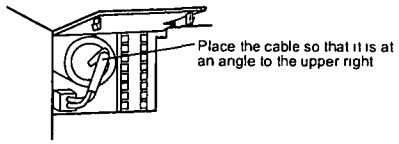

3-1-4 Dimensions

CJ1 and CJ1-H CPU Units

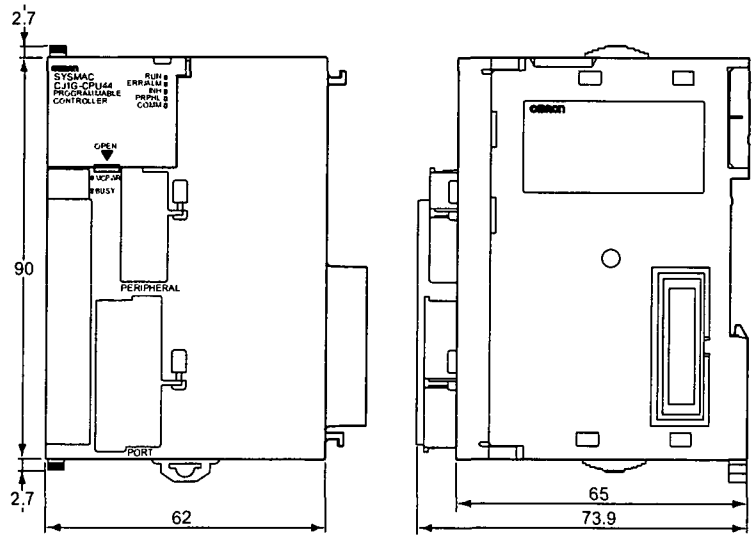

CJ1M CPU Units

CPU Units without Built-in I/O (CJ1M-CPU1□)

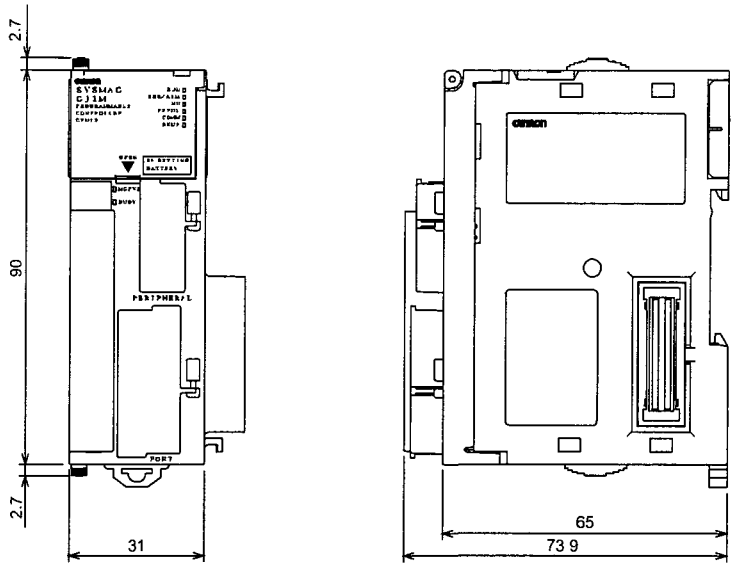

CPU Units with Built-in I/O (CJ1M-CPU2□)

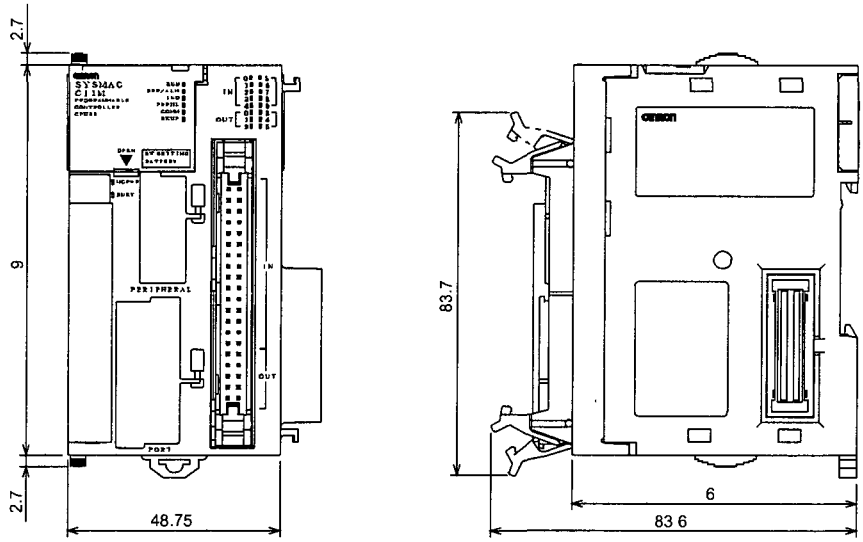

3-2 File Memory

For CJ-series CPU Units, the Memory Card and a specified part of the EM Area can be used to store files. All user programs, the I/O Memory Area, and the Parameter Area can be stored as files.

File memory	Memory type	Memory capacity	Model
Memory Card	Flash memory	15 Mbytes	HMC-EF172
		30 Mbytes	HMC-EF372
		64 Mbytes	HMC-EF7672
(CJ1 and CJ1-H CPU Units only.) EM file memory 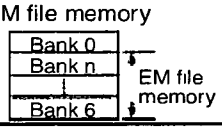	RAM	The maximum capacity of the CPU Unit's EM Area (e.g., the maximum capacity for a CPU66 is 448 Kbytes)	The specified bank (set in the PLC Setup) to the last bank of the EM Area in the I/O Memory.

Note

1. A Memory Card can be written up to approximately 100,000 times.
2. The HMC-AP001 Memory Card Adapter is shown below.

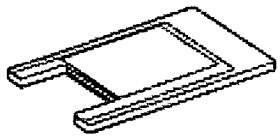

3-2-1 Files Handled by CPU Unit

Files are ordered and stored in the Memory Card or EM file memory according to the file name and the extension attached to it.

General-use Files

File type	Contents		File name	Extension
Data files	Specified range in I/O memory	Binary	******** (See note 1.)	.IOM
		Text		.TXT
		CSV		.CSV
Program files	All user programs			.OBJ
Parameter files	PLC Setup, registered I/O tables, routing tables, CPU Bus Unit settings, and Controller Link data link tables			.STD

Files Transferred Automatically at Startup

File type	Contents	File name	Extension
Data files	DM area data (stores data for specified number of words starting from D20000)	AUTOEXEC	.IOM
	DM area data (stores data for specified number of words starting from D00000)	ATEXECDM	.IOM
	EM area for bank No. □ (stores data for specified number of words starting from E□_00000)	ATEXECE□	.IOM

4. Using the FREAD(700) instruction, read the I/O memory files from the EM file memory to the I/O memory in the CPU Unit.

Note The following files can be transferred between EM file memory and the CX-Programmer.

File	File name and extension	Data transfer direction
Symbols file	SYMBOLS.SYM	Between CX-Programmer and EM file memory
Comment file	COMMENTS.CNT	

1,2,3... 1. Format the EM Area in the CPU Units as file memory.

2. Place the CX-Programmer online and use the file transfer operations to transfer the above files from the personal computer to the PLC or from the PLC to the personal computer.

3-2-4 Memory Card Dimensions

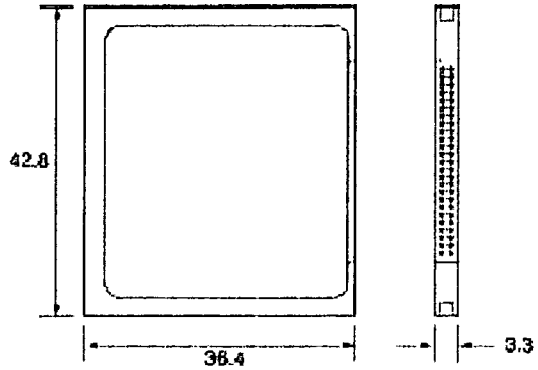

3-2-5 Installing and Removing the Memory Card

Installing the Memory Card

1,2,3... 1. Pull the top end of the Memory Card cover forward and remove from the Unit.

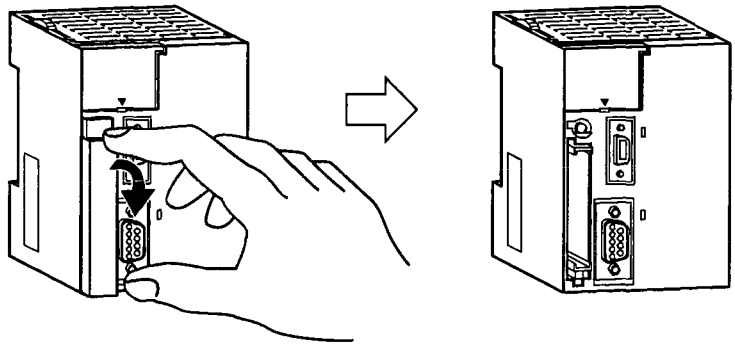

2. Insert the Memory Card with the label facing to the left. (Insert with the Δ on the Memory Card label and the Δ on the CPU Unit facing each other.)

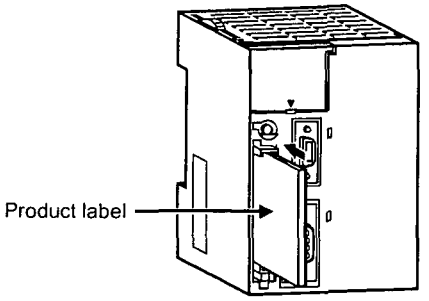

3. Push the Memory Card securely into the compartment. If the Memory Card is inserted correctly, the Memory Card eject button will be pushed out.

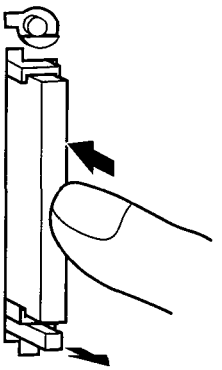

Removing the Memory Card

1,2,3... 1. Press the Memory Card power supply switch.

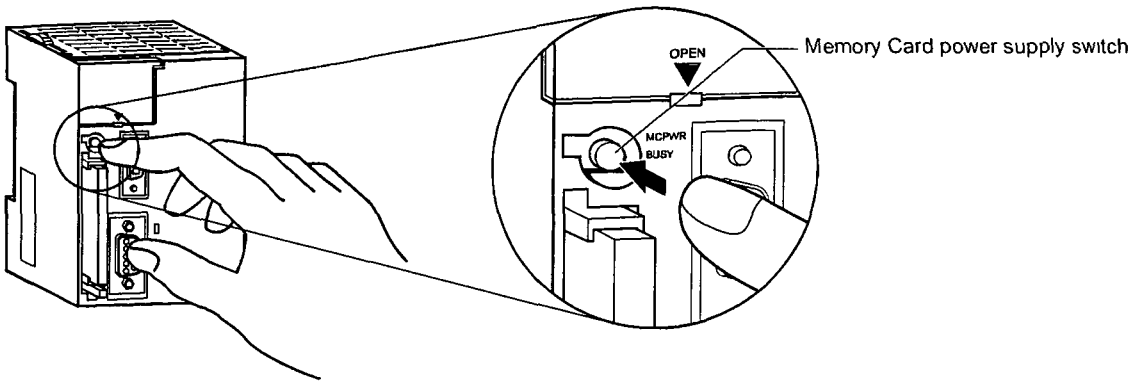

2. Press the Memory Card eject button after the BUSY indicator is no longer lit.

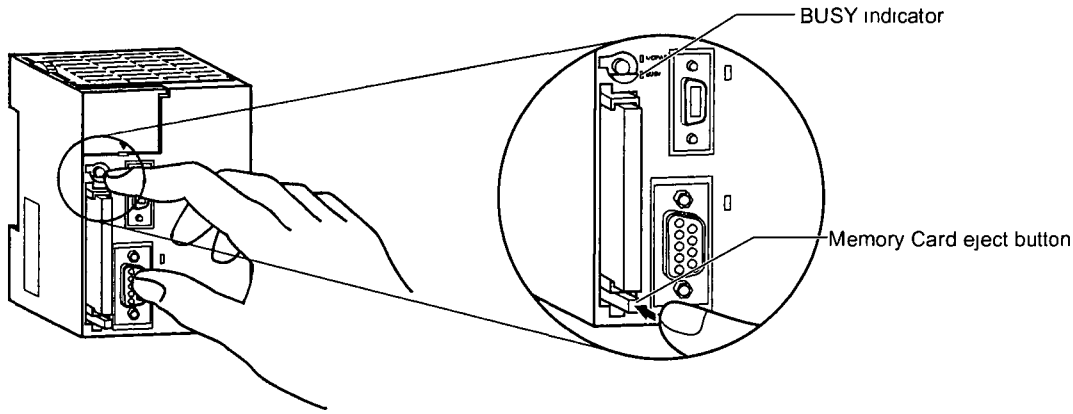

3. The Memory Card will eject from the compartment.
4. Install the Memory Card cover when a Memory Card is not being used.

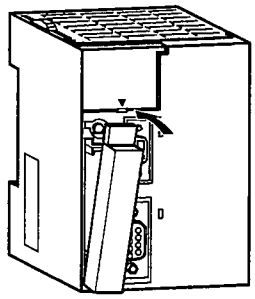

Note
1. Never turn OFF the PLC while the CPU is accessing the Memory Card.
2. Never remove the Memory Card while the CPU is accessing the Memory Card. Press the Memory Card power supply switch and wait for the BUSY indicator to go OFF before removing the Memory Card. In the worst case, the Memory Card may become unusable if the PLC is turned OFF or the Memory Card is removed while the Card is being accessed by the CPU.
3. Never insert the Memory Card facing the wrong way. If the Memory Card is inserted forcibly, it may become unusable.

SECTION 11
Troubleshooting

This section provides information on hardware and software errors that occur during PLC operation.

11-1 Error Log 404
11-2 Error Processing 405
11-2-1 Error Categories 405
11-2-2 Error Information 405
11-2-3 Error Codes and Error Flags 406
11-2-4 Error Processing Flowchart 407
11-2-5 Error Messages 409
11-2-6 Power Supply Check 420
11-2-7 Memory Error Check 421
11-2-8 Program Error Check 422
11-2-9 Cycle Time Too Long Error Check 423
11-2-10 PLC Setup Setting Error Check 423
11-2-11 Battery Error Check 424
11-2-12 I/O Setting Error Check 424
11-2-13 I/O Check 425
11-2-14 Environmental Conditions Check 426
11-3 Troubleshooting Racks and Units 427

11-1 Error Log

Each time that an error occurs in a CJ PLC, the CPU Unit stores error information in the Error Log Area. The error information includes the error code (stored in A400), error contents, and time that the error occurred. Up to 20 records can be stored in the Error Log.

Errors Generated by FAL(006)/FALS(007)

In addition to system-generated errors, the PLC records user-defined FAL(006) and FALS(007) errors, making it easier to track the operating status of the system.

A user-defined error is generated when FAL(006) or FALS(007) is executed in the program. The execution conditions of these instructions constitute the user-defined error conditions. FAL(006) generates a non-fatal error and FALS(007) generates a fatal error that stops program execution.

The following table shows the error codes for FAL(006) and FALS(007).

Instruction	FAL numbers	Error codes
FAL(006)	#0001 to #01FF (1 to 511 decimal)	4101 to 42FF
FALS(007)	#0001 to #01FF (1 to 511 decimal)	C101 to C2FF

Error Log Structure

When more than 20 errors occur, the oldest error data (in A195 to A199) is deleted and the newest record is stored in A100 to A104.

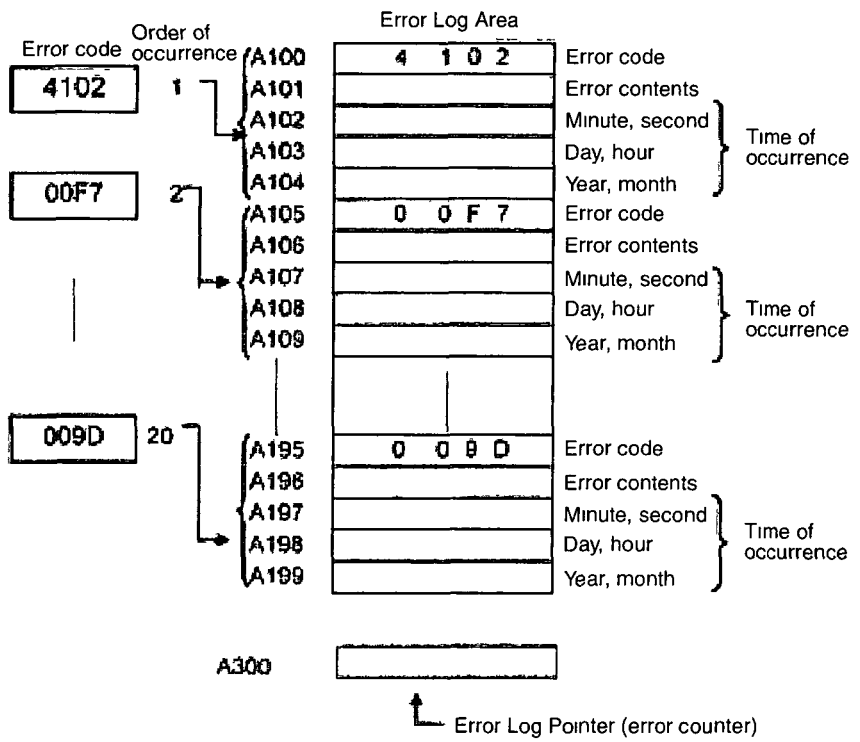

Note The Error Log Pointer can be reset by turning ON the Error Log Pointer Reset Bit (A50014), effectively clearing the error log displays from the Programming Consoles or CX-Programmer. The contents of the Error Log Area will not be cleared by resetting the pointer.

11-2 Error Processing

11-2-1 Error Categories

Errors in CJ-series PLCs can be broadly divided into the following three categories.

Category	Result	Indicators		Comments
		RUN	ERR/ALM	
CPU Standby	The CPU Unit will not start operation in RUN or MONITOR mode.	OFF	OFF	---
Non-fatal Errors (including FAL(006))	The CPU Unit will continue operating in RUN or MONITOR mode.	ON (Green)	Flashing (Red)	Other indicators will also operate when a communications error has occurred or the Output OFF Bit is ON.
Fatal Errors (including FALS(007))	The CPU Unit will stop operating in RUN or MONITOR mode.	OFF	ON (Red)	The indicators will all be OFF when there is a power interruption.

11-2-2 Error Information

There are basically four sources of information on errors that have occurred:

1,2,3...

1. The CPU Unit's indicators
2. The Auxiliary Area Error Flags
3. The Auxiliary Area Error Information Words
4. The Auxiliary Area Error Code Word

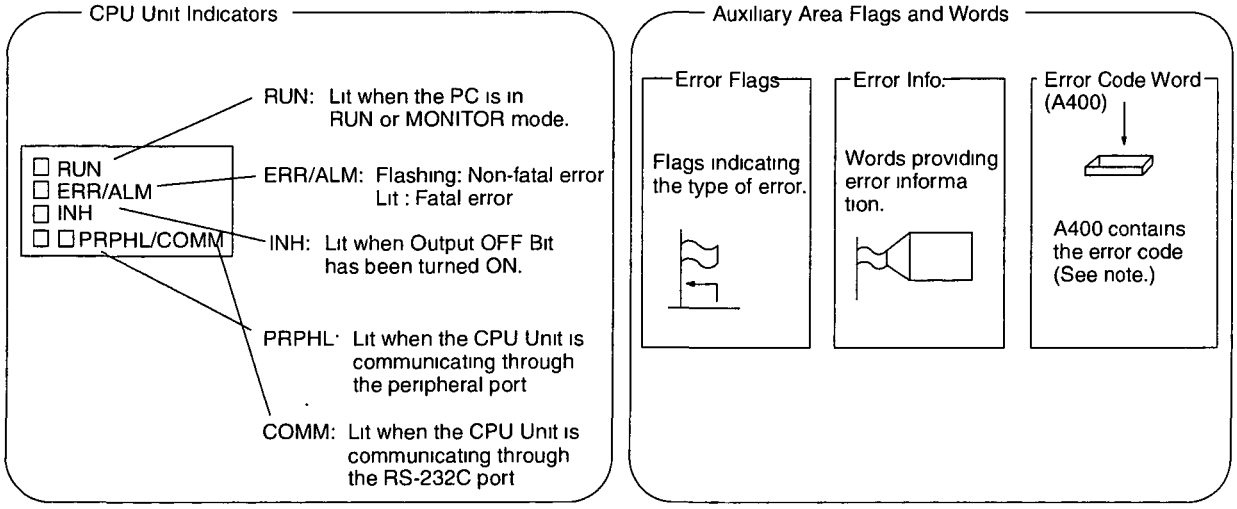

Note When two or more errors occur at the same time, the highest (most serious) error code will be stored in A400.

Indicator Status and Error Conditions

The following table shows the status of the CPU Unit's indicators for errors that have occurred in RUN or MONITOR mode.

Indicator*	CPU error	CPU reset	CPU standby	Fatal error	Non-fatal error	Communications error		Output OFF Bit ON
						Peripheral	RS-232C	
RUN	OFF	OFF	OFF	OFF	ON	ON	ON	ON
ERR/ALM	ON	OFF	OFF	ON	Flashing	---	---	---
INH	OFF	OFF	---	---	---	---	---	ON
PRPHL	---	---	---	---	---	OFF	---	---
COMM	---	---	---	---	---	---	OFF	---

11-2-3 Error Codes and Error Flags

Classification	Error code	Error name	Page
Fatal system errors	80F1	Memory error	412
	80C0 to 80C7, 80CE, 80CF	I/O bus error	412
	80E9	Duplicated number error	413
	80E1	Too many I/O points	415
	80E0	I/O setting error	415
	80F0	Program error	414
	809F	Cycle time too long	416
	80EA	Expansion Rack number duplicated	413
Non-fatal system errors	008B	Interrupt task error	417
	009A	Basic I/O error	417
	009B	PLC Setup setting error	417
	00E7	I/O verification error	415
	0200 to 020F	CJ-series CPU Bus Unit error	418
	0300 to 035F, 03FF	Special I/O Unit error	418
	00F7	Battery error	418
	0400 to 040F	CJ-series CPU Bus Unit setting error	418
	0500 to 055F	Special I/O Unit setting error	418
User-defined fatal errors	4101 to 42FF	FAL(006) error (4101 to 42FF are stored for FAL numbers 001 to 511)	417
User-defined non-fatal errors	C101 to C2FF	FALS(007) error (C101 to C2FF are stored for FALS numbers 001 to 511)	416

11-2-4 Error Processing Flowchart

Use the following flowchart as a guide for error processing with a Programming Console.

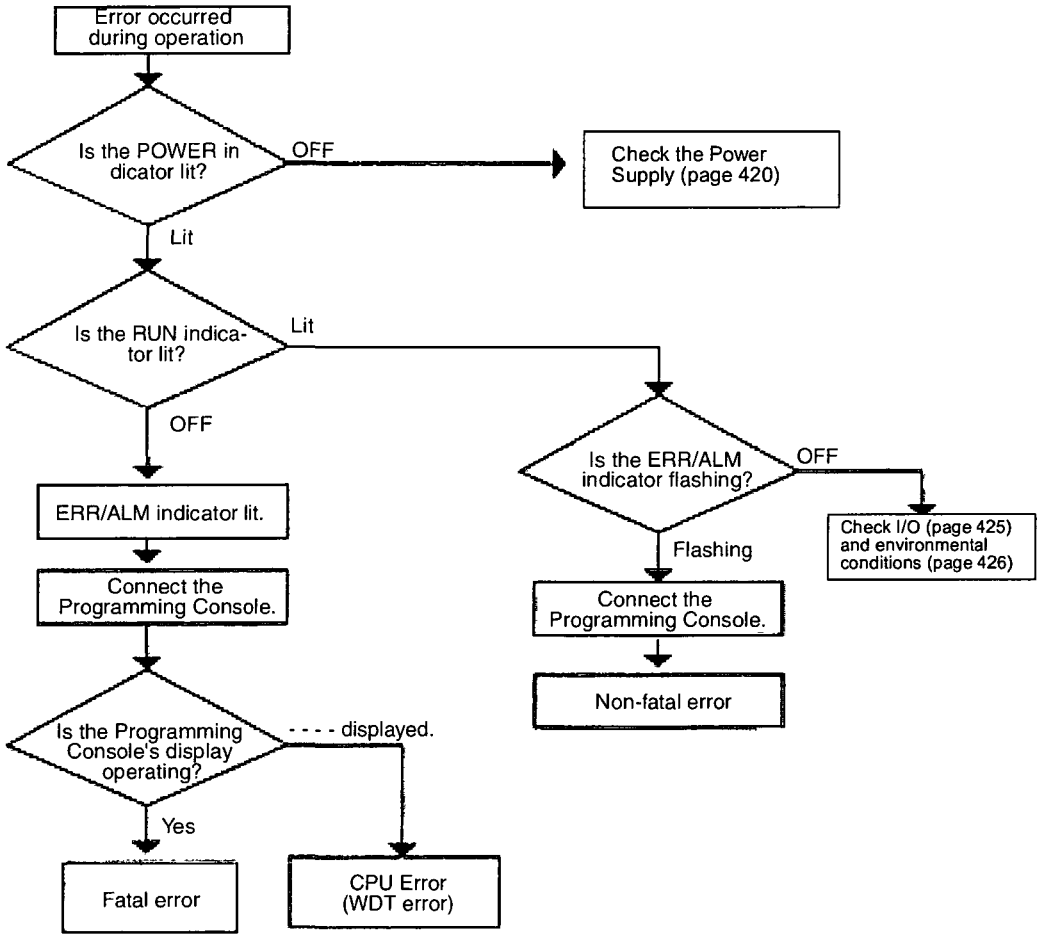

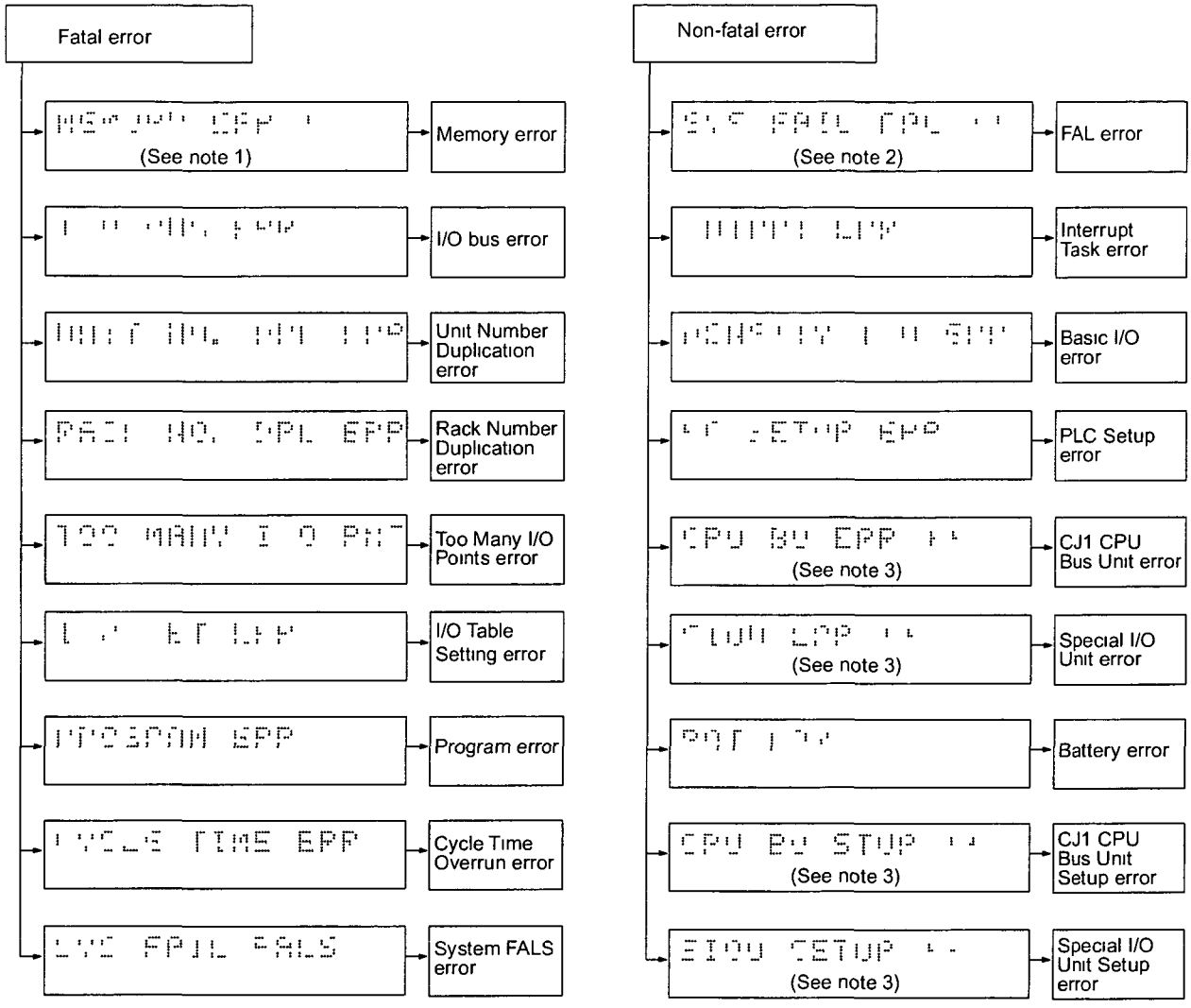

1 The rack number will be given at *
2 The FAL/FALS number will be given at ***
3 The unit number will be given at **
4 The master number will be given at *

11-2-5 Error Messages

The following tables show error messages for errors which can occur in CJ-series PLCs and indicate the likely cause of the errors.

Note Always confirm the safety of any related facilities and machines before turning OFF the power supply.

CPU Errors

A CPU error has occurred if the indicators have the following conditions in RUN or MONITOR mode. A Programming Device cannot be connected to the CPU if an CPU error has occurred.

Note If a fatal operating error occurs, the indicators will be the same as shown below for CPU errors, but a Programming Device can be connected. This will enable distinguishing between the two types of error.

Power Supply Unit Indicator	CPU Unit Indicators				
POWER	RUN	ERR/ALM	INH	PRPHL	COMM
ON	OFF	ON	---	---	---

Status	Error	Programming Console display	Error flags in Auxiliary Area	Error code (in A400)	Flags and word data	Probable cause	Possible remedy
Stopped	CPU error (WDT error)	- - - -	None	None	None	Watchdog timer has exceeded maximum setting. (This error does not normally occur)	Turn the power OFF and restart. The Unit may be damaged. Contact you OMRON representative.

CPU Reset

The following indictor status shows that the CPU Unit has been reset (not a CPU error). A Programming Device cannot be connected.

Power Supply Unit Indicator	CPU Unit Indicators				
POWER	RUN	ERR/ALM	INH	PRPHL	COMM
ON	---	---	---	---	---

Status	Error	Programming Console display	Error flags in Auxiliary Area	Error code (in A400)	Flags	Probable cause	Possible remedy
Stopped	CPU reset	----	None	None	None	Power is not being supplied to an Expansion Rack.	Supply power to the Expansion Racks.
						I/O Control Unit is not connected correctly, e.g., more than one is connected or one is connected to an Expansion Rack.	Turn OFF the power supply, correct the connections, and turn the power supply back ON.
						The I/O Connecting cable is not connected correctly, e.g., the connections to the input and output connectors on the I/O Interface Unit are backward.	Turn OFF the power supply, correct the connections, and turn the power supply back ON.

Note When power supply is interrupted to an Expansion Rack, the CPU Unit will stop program execution and the same operations as are performed when the power supply to the CPU Unit is interrupted will be performed. For example, if the power OFF interrupt task is enabled, it will be executed. If power is then restored to the Expansion Rack, the CPU Unit will perform startup processing, i.e., the same operational status as existed before the power interrupt will not necessarily be continued.

CPU Standby Errors

A CPU standby error has occurred if the indicators have the following conditions in RUN or MONITOR mode.

When a CJ-series CPU Unit is turned ON, cyclic servicing is started and RUN mode is entered only after all Special I/O Units and CPU Bus Units have been detected. If the startup mode is RUN or MONITOR mode, the CPU will remain on standby until all Units have been directed.

Power Supply Unit Indicator	CPU Unit Indicators				
POWER	RUN	ERR/ALM	INH	PRPHL	COMM
ON	OFF	OFF	---	---	---

Status	Error	Programming Console display	Error flags in Auxiliary Area	Error code (in A400)	Flags	Probable cause	Possible remedy
Stopped	CPU standby error	CPU WAIT'G	None	None	None	A CPU Bus Unit has not started properly.	Check the settings of the CPU Bus Unit.
						A Special I/O Unit, or Interrupt Input Unit was not recognized.	Read the I/O table and replace any Special I/O Unit or Interrupt Input Units for which only "$" is displayed.

Startup Condition

The CJ1-H and CJ1M CPU Units support a Startup Condition setting.

To start the CPU Unit in MONITOR or PROGRAM mode even if there is one or more Units that has not completed startup processing, set the Startup Condition to 1.

PLC Setup

Programming Console setting address		Name	Settings	Default
Word	Bit			
83	15	Startup Condition	0: Wait for Units. 1: Don't wait.	0: Wait for Units.

Fatal Errors

A fatal error has occurred if the indicators have the following conditions in RUN or MONITOR mode.

Power Supply Unit Indicator	CPU Unit Indicators				
POWER	RUN	ERR/ALM	INH	PRPHL	COMM
ON	OFF	ON	---	---	---

Connect a Programming Console to display the error message or use the error log window on the CX-Programmer. The cause of the error can be determined from the error message and related Auxiliary Area flags and words.

Errors are listed in order of importance. When two or more errors occur at the same time, the more serious error's error code will be recorded in A400.

If the IOM Hold Bit hasn't been turned ON to protect I/O memory, all non-retained areas of I/O memory will be cleared when a fatal error other than FALS(007) occurs. If the IOM Hold Bit is ON, the contents of I/O memory will be retained but all outputs will be turned OFF.

If the IOM Hold Bit hasn't been turned ON to protect I/O memory, all non-retained areas of I/O memory will be cleared when a fatal error other than FALS(007) occurs. When the IOM Hold Bit is ON, the contents of I/O memory will be retained but all outputs will be turned OFF.

Error	Programming Console display	Error code (in A400)	Flag and word data	Probable cause	Possible remedy
Memory error	MEMORY ERR	80F1	A40115: Memory Error Flag A403: Memory Error Location	An error has occurred in memory. A bit in A403 will turn ON to show the location of the error as listed below.	See below.
				A40300 ON: A checksum error has occurred in the user program memory. An illegal instruction was detected.	Check the program and correct the error.
				A40304 ON: A checksum error has occurred in the PLC Setup.	Clear the entire PLC Setup to 0000 and reenter the settings.
				A40305 ON: A checksum error has occurred in the registered I/O table.	Initialize the registered I/O table and generate a new I/O table.
				A40307 ON: A checksum error has occurred in the routing tables.	Initialize the routing tables and reenter the tables.
				A40308 ON: A checksum error has occurred in the CPU Bus Unit setup.	Initialize the CPU Bus Unit setup and reenter the settings.
				A40309 ON: An error occurred during automatic transfer from the Memory Card at startup.	Make sure that the Memory Card is installed properly and that the correct file is on the Card.
				A40310 ON: An error occurred in flash memory (backup memory).	CPU Unit hardware is faulty. Replace the CPU Unit.
I/O Bus error	I/O BUS ERR	80C0 to 80CE or 80CF	A40114: I/O Bus Error Flag A404: I/O Bus Error Slot and Rack Numbers	Error has occurred in the bus line between the CPU and I/O Units or the End Cover is not connected to the CPU Rack or an Expansion Rack. A40400 to A40407 contain the error slot number (00 to 09) in binary. 0F hex indicates that the slot cannot be determined. 0E hex indicates the End Cover is not connected to the CPU Rack or an Expansion Rack. A40408 to A40415 contain the error rack number (00 to 03) in binary. 0F hex indicates that the rack cannot be determined. 0E hex indicates the End Cover is not connected to the CPU Rack or an Expansion Rack.	Try turning the power OFF and ON again. If the error isn't corrected, turn the power OFF and check cable connections between the I/O Units and Racks and the End Covers. Check for damage to the cable or Units. Turn the Rack's power supply OFF and then ON again.

Error	Programming Console display	Error code (in A400)	Flag and word data	Probable cause	Possible remedy
Unit/Rack Number Duplication error	UNIT No. DPL ERR	80E9	A40113: Duplication Error Flag A410: CPU Bus Unit Duplicate Number Flags	The same number has been allocated to more than one CPU Bus Unit. Bits A41000 to A41015 correspond to unit numbers 0 to F.	Check the unit numbers, eliminate the duplications, and turn the Rack's power supply OFF and then ON again.
			A40113: Duplication Error Flag A411 to A416: Special I/O Unit Duplicate Number Flags	The same number has been allocated to more than one Special I/O Unit. Bits A41100 to A41615 correspond to unit numbers 0 to 95.	Check the unit numbers, eliminate the duplications, and turn the Rack's power supply OFF and then ON again.
	RACK No. DPL ERR	80EA	A409: Expansion Rack Duplicate Rack Number	The same I/O word has been allocated to more than one Basic I/O Unit.	Check allocations to Units on the rack number whose bit in ON in A40900 to A40903. Correct the allocations so that no words are allocated more than once, including to Units on other Racks, and turn the Rack's power supply OFF and then ON again.
				An Expansion Rack's starting word address exceeds CIO 0901. The corresponding bit in A40900 to A40903 (Racks 0 to 3) will be turned ON.	Check the first word setting for the Rack indicated in A40900 to A40903 and change the setting to a valid word address below CIO 0900 with a Programming Device.
Program error	PROGRAM ERR	80F0	A40109: Program Error Flag A294 to A299: Program error information	The program is incorrect. See the following rows of this table for details. The address at which the program stopped will be output to A298 and A299.	Check A295 to determine the type of error that occurred and check A298/A299 to find the program address where the error occurred. Correct the program and then clear the error.
				A29511: No END error	Be sure that there is an END(001) instruction at the end of the task specified in A294 (program stop task number). The address where the END(001)
				A29515: UM overflow error The last address in UM (user program memory) has been exceeded.	Use a Programming Device to transfer the program again.

Error	Programming Console display	Error code (in A400)	Flag and word data	Probable cause	Possible remedy
Program error (cont.)	PROGRAM ERR	80F0	A40109: Program Error Flag A294 to A299: Program error information	A29513: Differentiation overflow error Too many differentiated instructions have been inserted or deleted during online editing.	After writing any changes to the program, switch to PROGRAM mode and then return to MONITOR mode to continue editing the program.
				A29512: Task error A task error has occurred. The following conditions will generate a task error. 1) There isn't an executable cyclic task. 2) There isn't a program allocated to the task. Check A294 for the number of the task missing a program. 3) The task specified in a TKON(820), TKOF(821), or MSKS(690) instruction doesn't exist.	Check the startup cyclic task attributes. Check the execution status of each task as controlled by TKON(820) and TKOF(821). Make sure that all of the task numbers specified in TKON(820), TKOF(821), and MSKS(690) instructions have corresponding tasks. Use MSKS(690) to mask any I/O or scheduled interrupt tasks that are not being used and that do not have programs set for them.
				A29510: Illegal access error An illegal access error has occurred and the PLC Setup has been set to stop operation for an instruction error. The following are illegal access errors: 1. Reading/writing a parameter area. 2. Writing memory that is not installed. 3. Writing an EM bank that is EM file memory. 4. Writing to a read-only area. 5. Indirect DM/EM address that is not in BCD when BCD mode is specified.	Find the program address where the error occurred (A298/A299) and correct the instruction.
				A29509: Indirect DM/EM BCD error An indirect DM/EM BCD error has occurred and the PLC Setup has been set to stop operation for an instruction error.	Find the program address where the error occurred (A298/A299) and correct the indirect addressing or change to binary mode.
				A29508: Instruction error An instruction processing error has occurred and the PLC Setup has been set to stop operation for an instruction error.	Find the program address where the error occurred (A298/A299) and correct the instruction.
				A29514: Illegal instruction error The program contains an instruction that cannot be executed.	Retransfer the program to the CPU Unit.

Error	Programming Console display	Error code (in A400)	Flag and word data	Probable cause	Possible remedy
Too Many I/O Points error	TOO MANY I/O PNT	80E1	A40111: Too Many I/O Points Flag A407: Too Many I/O Points, Details	The probable causes are listed below. The 3-digit binary value (000 to 101) in A40713 to A40715 indicates the cause of the error. The value of these 3 bits is also output to A40700 to A40712. 1) The total number of I/O points set in the I/O Table exceeds the maximum allowed for the CPU Unit 2) The number of Expansion Racks exceeds the maximum (bits: 101). 3) More than 10 I/O Units are connected to one Rack (bits: 111).	Correct the problem and then turn the power supply OFF and back ON.
I/O Table Setting error	I/O SET ERR	80E0	A40110: I/O Setting Error Flag	The Units that are connected do not agree with the registered I/O table or the number of Units that are connected does not agree with the number in the registered I/O table. (The following Units must be set as a 16-point Units in the I/O tables made on the CX-Programmer because they are allocated 1 word each even though they have only 8 points: CJ1W-ID201, CJ1W-OC201, CJ1W-IA201, CJ1W-OA201, and CJ1W-OD201/202/203/204. An I/O setting error will occur if this Unit is set as an 8-point Unit.)	Any discrepancies in the I/O table will be detected when the I/O verification operation is performed. If this error occurs even when the number Units is correct, there may be a faulty Unit. Automatically create the I/O tables and check for Units that are not being detected. If the number of Units is not correct, turn OFF the power supply and correctly connect the proper Units. If the number of Units is correct, confirm the Unit in discrepancy, turn OFF the power supply, and then correct the Unit connections. If there is a mistake in the I/O tables, recreate or edit them to correct the mistake.
				An Interrupt Input Unit has been connected in the wrong position, i.e., not in one of the five positions (CJ1 and CJ1-H) or three positions (CJ1M) next to the CPU Unit, or has been registered in the Registered I/O Tables in the wrong position.	A40508 will turn ON if an Interrupt Input Unit is in the wrong position (i.e., either physically in the wrong position in the system or registered in the wrong position in the Registered I/O Tables). Mount the Unit in the correct position or correct the Registered I/O Tables.

Error	Programming Console display	Error code (in A400)	Flag and word data	Probable cause	Possible remedy
Cycle Time Overrun error	CYCLE TIME ERR	809F	A40108: Cycle Time Too Long Flag	The cycle time has exceeded the maximum cycle time (watch cycle time) set in the PLC Setup.	Change the program to reduce the cycle time or change the maximum cycle time setting. Check the Maximum Interrupt Task Processing Time in A440 and see if the Cycle Time Watch Time can be changed. The cycle time can be reduced by dividing unused parts of the program into tasks, jumping unused instructions in tasks, and disabling cyclic refreshing of Special I/O Units that don't require frequent refreshing.
	CYCLE TIME OVER	809F	A40515: Peripheral Servicing Cycle Time Too Long	Turns ON when the peripheral servicing time in a Parallel Processing Mode exceeds 2 s.	Change the CPU Processing Mode in the PLC Setup to Normal Mode or Peripheral Servicing Priority Mode, or review the system to reduce the event load. Parallel processing may not be possible if the program execution time (given in A66) is too short (e.g., less than 0.2 ms).
System FALS error	SYS FAIL FALS	C101 to C2FF	A40106: FALS Error Flag	FALS(007) has been executed in the program. The error code in A400 will indicate the FAL number. The leftmost digit of the code will be C and the rightmost 3 digits of the code will be from 100 to 2FF hex and will correspond to FAL numbers 001 to 511.	Correct according to cause indicated by the FAL number (set by user).

Non-fatal Errors

A non-fatal error has occurred if the indicators have the following conditions in RUN or MONITOR mode.

Power Supply Unit Indicator	CPU Unit Indicators				
POWER	RUN	ERR/ALM	INH	PRPHL	COMM
ON	ON	Flashing	---	---	---

Connect a Programming Console to display the error message or use the error log window on the CX-Programmer. The cause of the error can be determined from the error message and related Auxiliary Area flags and words.

Errors are listed in order of importance. When two or more errors occur at the same time, the more serious error's error code will be recorded in A400.

Error	Programming Console display	Error code (in A400)	Flag and word data	Probable cause	Possible remedy
System FAL error	SYS FAIL FAL	4101 to 42FF	A40215: FAL Error Flag A360 to A391: Executed FAL Number Flags	FAL(006) has been executed in program. Executed FAL Number Flags A36001 to A39115 correspond to FAL numbers 001 to 511. The error code in A400 will indicate the FAL number. The leftmost digit of the code will be 4 and the rightmost 3 digits of the code will be from 100 to 2FF hex and will correspond to FAL numbers 001 to 511.	Correct according to cause indicated by FAL number (set by user).
Interrupt Task error	INTRPT ERR	008B	A40213: Interrupt Task Error Flag A426: Interrupt Task Error, Task Number	PLC Setup Set to Detect Interrupt Task Errors: Attempted to refresh a Special I/O Unit's I/O from an interrupt task with IORF(097) while the Unit's I/O was being refreshed by cyclic I/O refreshing (duplicate refreshing).	Check the program. Either disable detection of interrupt task errors in the PLC Setup (address 128, bit 14) or correct the problem in the program.
Basic I/O error	DENSITY I/O ERR	009A	A40212: Basic I/O Unit Error Flag A408: Basic I/O Unit Error, Slot Number	An error has occurred in a Basic I/O Unit. A408 contains the errant rack/slot number.	Check the errant Unit for blown fuse, etc.
PLC Setup error	PLC Setup ERR	009B	A40210: PLC Setup Error Flag A406: PLC Setup Error Location	There is a setting error in the PLC Setup. The location of the error is written to A406.	Change the indicated setting to a valid setting.

Error	Programming Console display	Error code (in A400)	Flag and word data	Probable cause	Possible remedy
CPU Bus Unit error	CPU BU ERR	0200 to 020F	A40207: CPU Bus Unit Error Flag A417: CPU Bus Unit Error, Unit Number Flags	An error occurred in a data exchange between the CPU Unit and a CPU Bus Unit. The corresponding flag in A417 is turned ON to indicate the problem Unit. Bits A41700 to A41715 correspond to unit numbers 0 to F.	Check the Unit indicated in A417. Refer to the Unit's operation manual to find and correct the cause of the error. Restart the Unit by toggling its Restart Bit or turn the power OFF and ON again. Replace the Unit if it won't restart.
Special I/O Unit error	SIOU ERR	0300 to 035F, or 03FF	A40206: Special I/O Unit Error Flag A418 to A423: Special I/O Unit Error, Unit Number Flags	An error occurred in a data exchange between the CPU Unit and a Special I/O Unit. The corresponding flag in A418 to A423 is turned ON to indicate the problem Unit. Bits A41800 to A42315 correspond to unit numbers 0 to 95.	Check the Unit indicated in A418 to A423. Refer to the Unit's operation manual to find and correct the cause of the error. Restart the Unit by toggling its Restart Bit or turn the power OFF and ON again. Replace the Unit if it won't restart.
Battery error	BATT LOW	00F7	A40204: Battery Error Flag	This error occurs when the PLC Setup has been set to detect battery errors and the CPU Unit's backup battery is missing or its voltage has dropped.	Check battery and replace if necessary. Change the PLC Setup setting if battery-free operation is being used.
CPU Bus Unit Setup error	CPU BU ST ERR	0400 to 040F	A40203: CPU Bus Unit Setting Error Flag A427: CPU Bus Unit Setting Error, Unit Number Flags	An installed CPU Bus Unit does not match the CPU Bus Unit registered in the I/O table. The corresponding flag in A427 will be ON. Bits 00 to 15 correspond to unit numbers 0 to F.	Change the registered I/O table.
Special I/O Unit Setup error	SIOU SETUP ERR	0500 to 055F	A40202: Special I/O Unit Setting Error Flag A428 to A433: Special I/O Unit Setting Error, Unit Number Flags	An installed Special I/O Unit does not match the Special I/O Unit registered in the I/O table. The corresponding flag in A428 to A433 will be ON. Bits A42800 to A43315 correspond to unit numbers 0 to 95.	Change the registered I/O table.

Other Errors

Peripheral Port Communications Error

A communications error has occurred in communications with the device connected to the peripheral port if the indicators have the following conditions.

Power Supply Unit Indicator	CPU Unit Indicators				
POWER	RUN	ERR/ALM	INH	PRPHL	COMM
ON	ON	---	---	OFF	---

Check the setting of pin 4 on the DIP switch and the peripheral port settings in the PLC Setup. Also check the cable connections.

RS-232C Port Communications Error

A communications error has occurred in communications with the device connected to the RS-232C port if the indicators have the following conditions.

Power Supply Unit Indicator	CPU Unit Indicators				
POWER	RUN	ERR/ALM	INH	PRPHL	COMM
ON	---	---	---	---	OFF

Check the setting of pin 5 on the DIP switch and the RS-232C port settings in the PLC Setup. Also check the cable connections. If a host computer is connected, check the communications settings of the serial port on the host computer and the communications program in the host computer.

11-2-6 Power Supply Check

The allowable voltage ranges are shown in the following table.

Power Supply Unit	Power supply voltage	Allowable voltage range
CJ1W-PA205R	100 to 240 V AC	85 to 264 V AC
CJ1W-PA202	100 to 240 V AC	85 to 264 V AC
CJ1W-PD025	24 V DC	19.2 to 28.8 V DC

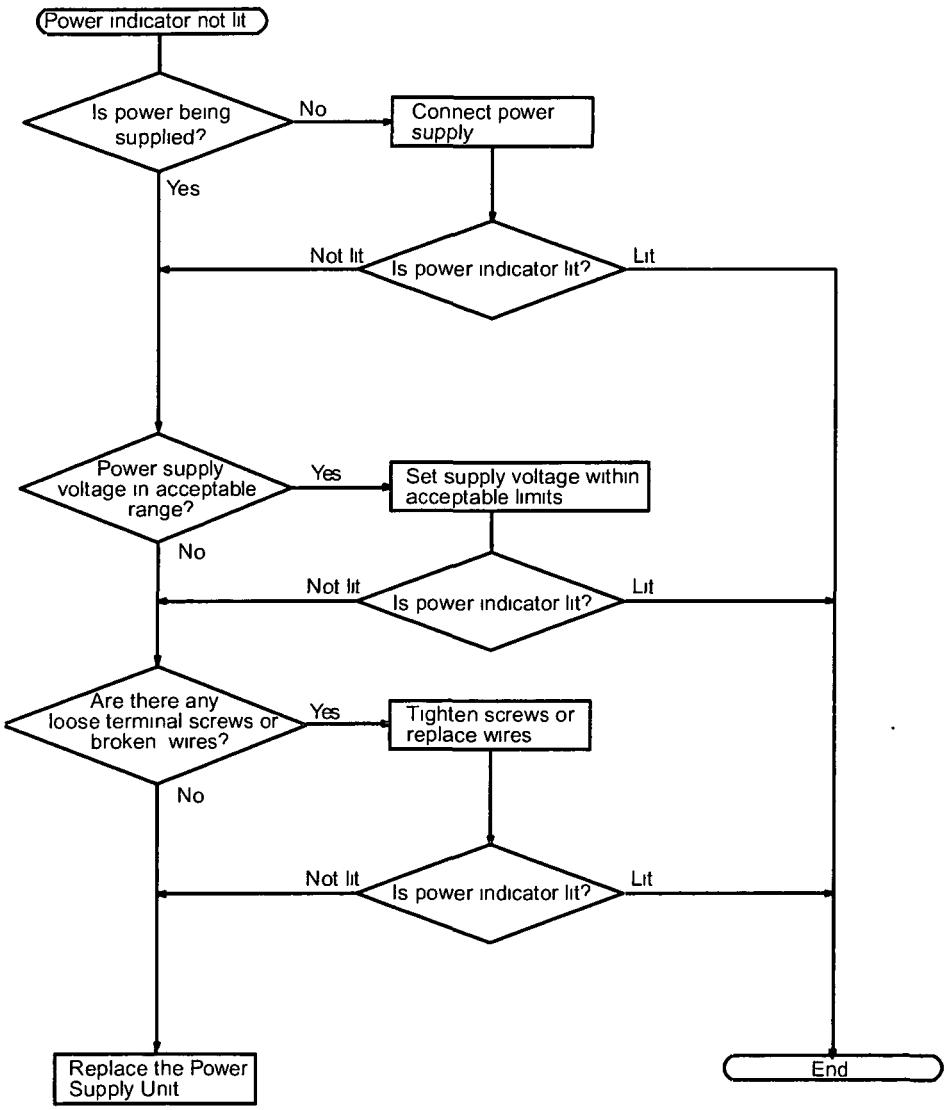

11-2-7 Memory Error Check

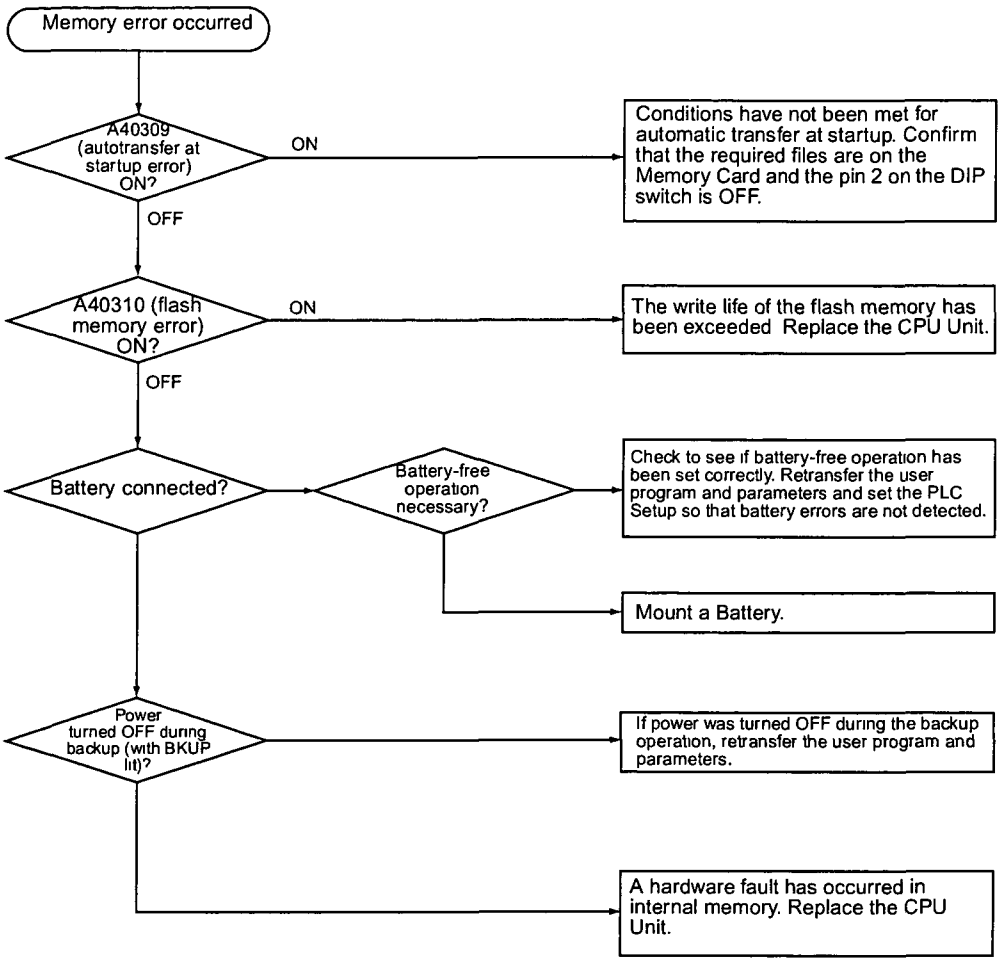

11-2-8 Program Error Check

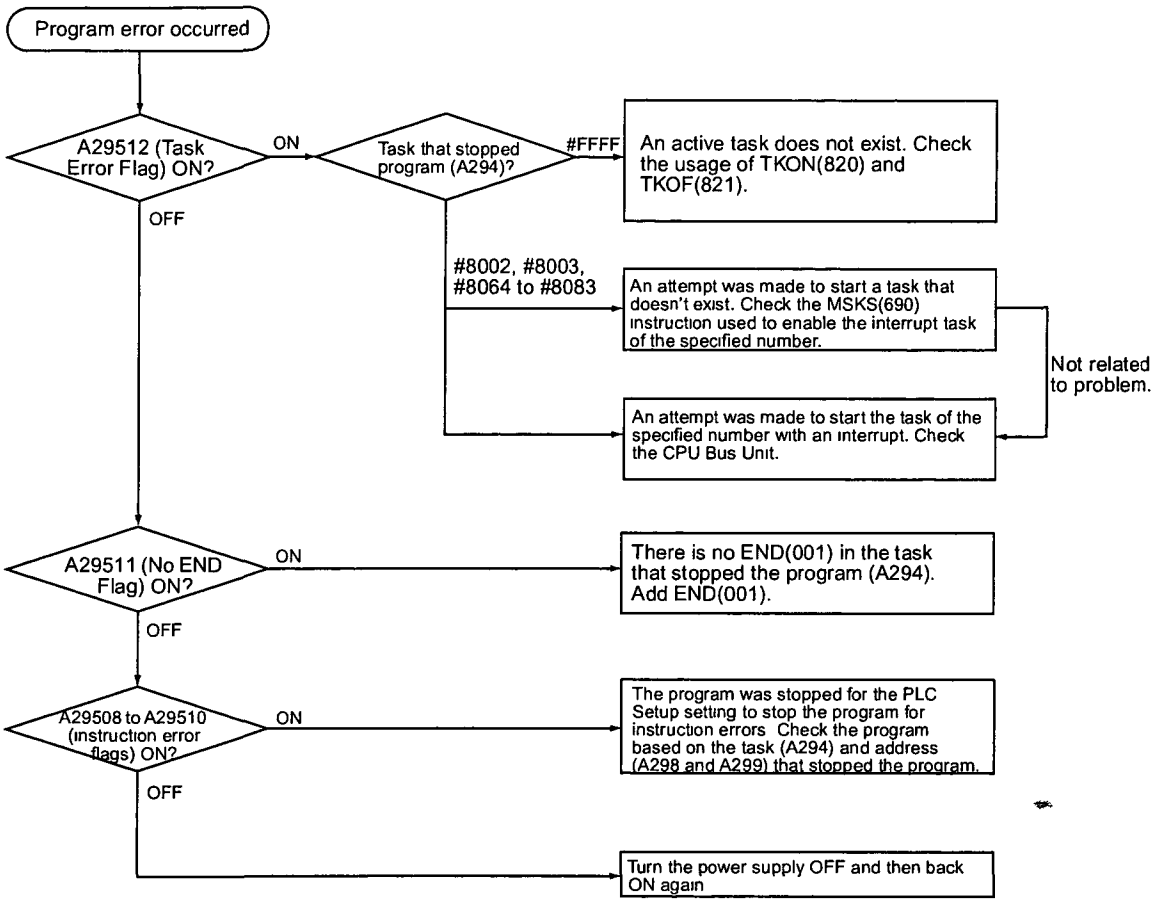

11-2-9 Cycle Time Too Long Error Check

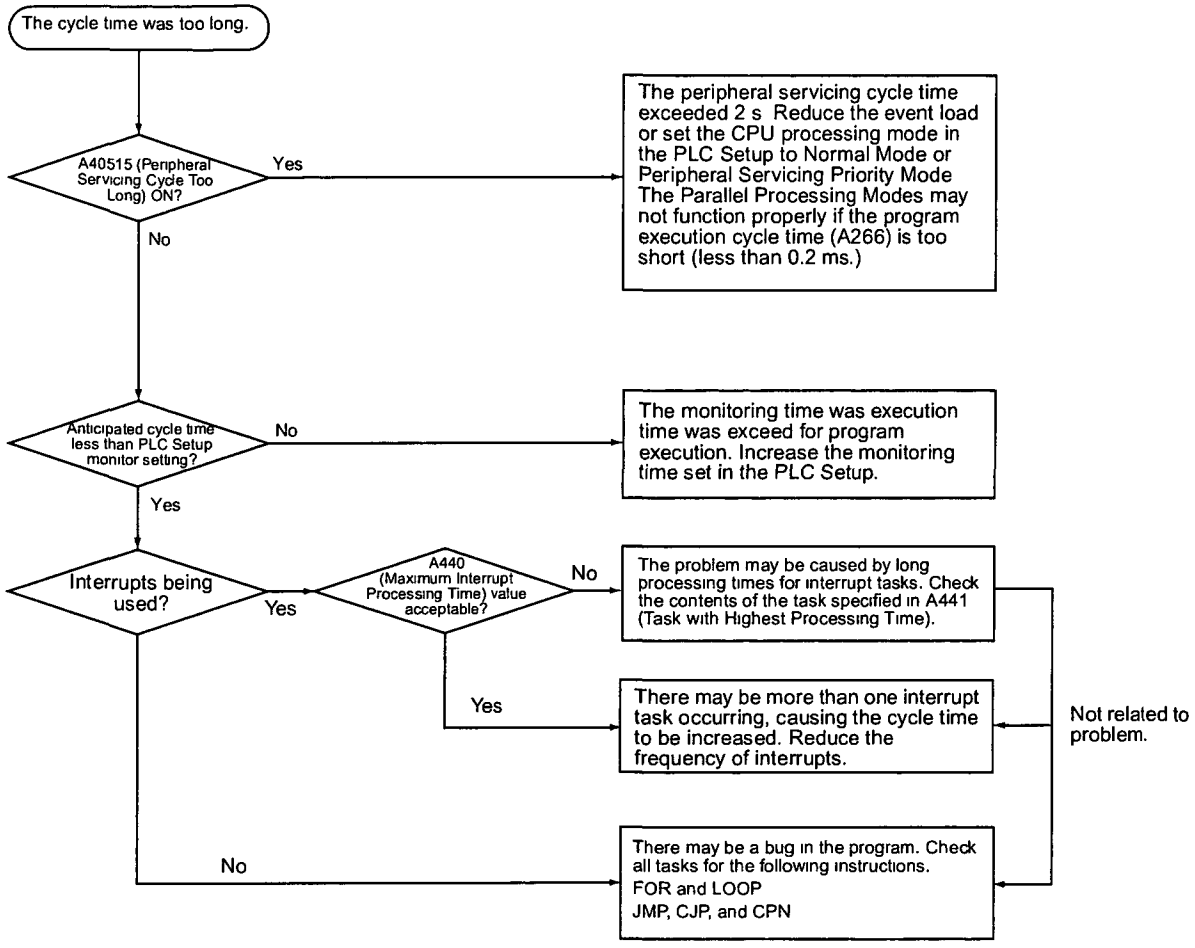

11-2-10 PLC Setup Setting Error Check

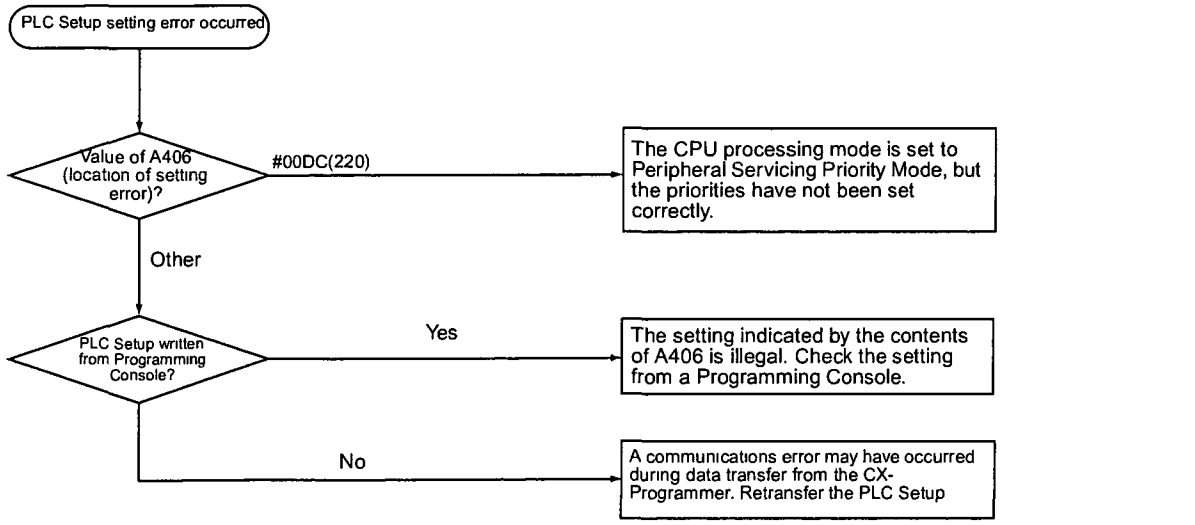

11-2-11 Battery Error Check

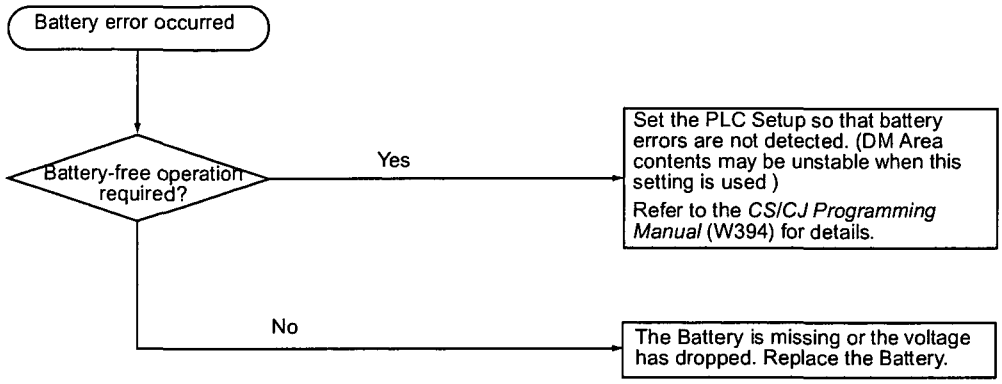

11-2-12 I/O Setting Error Check

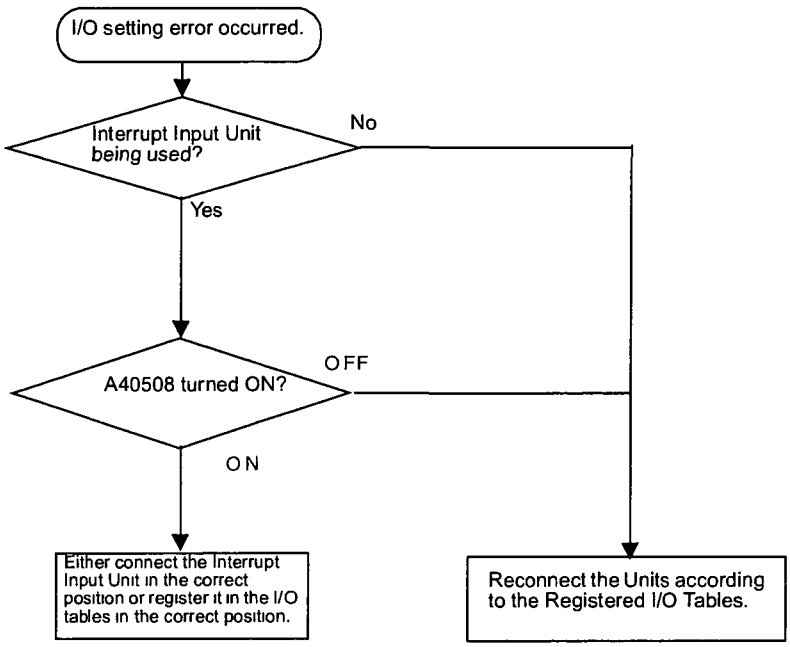

11-2-13 I/O Check

The I/O check flowchart is based on the following ladder diagram section assuming that SOL1 does not turn ON.

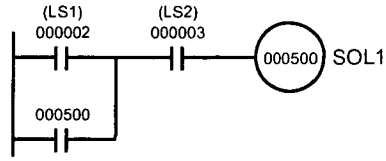

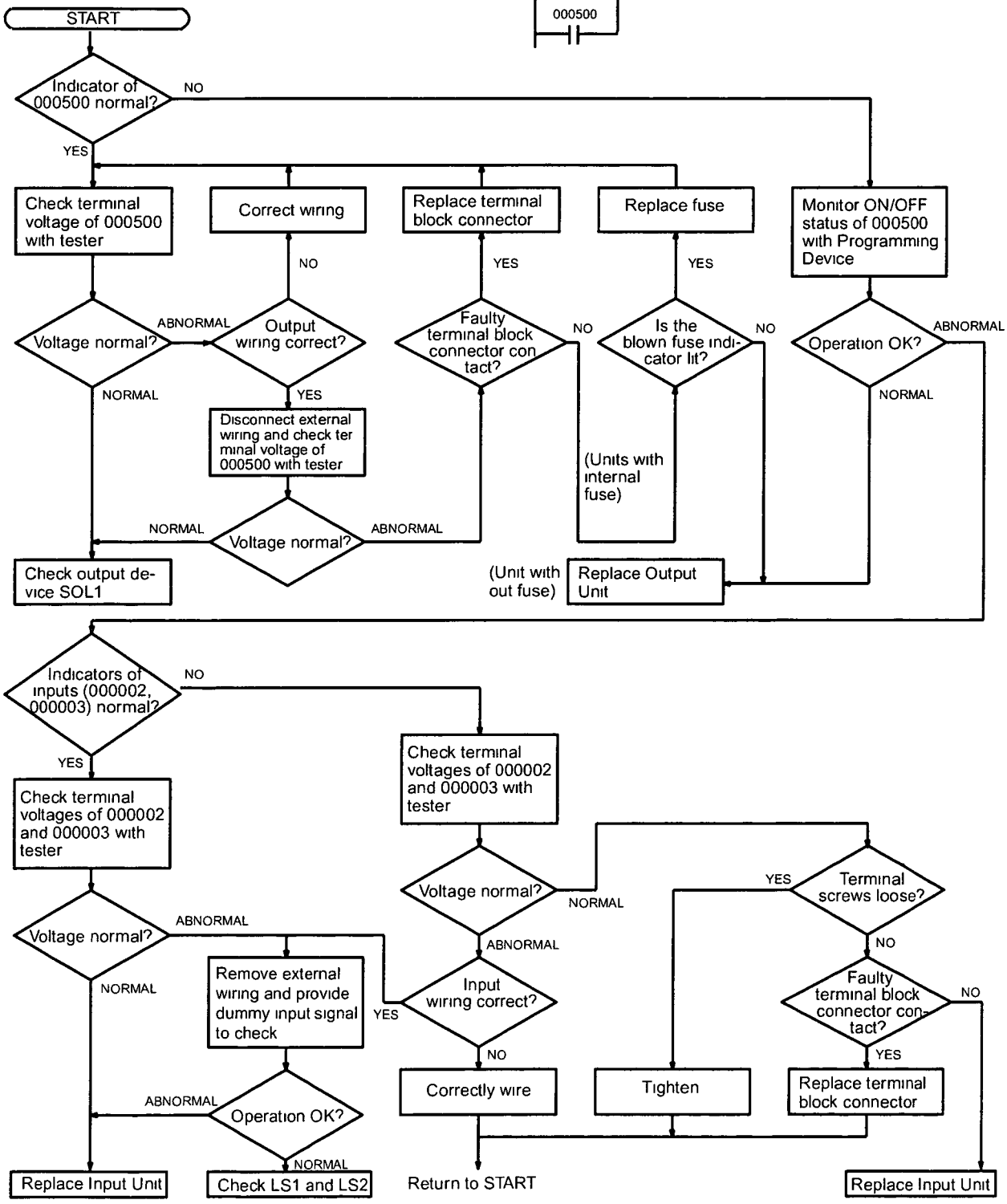

11-2-14 Environmental Conditions Check

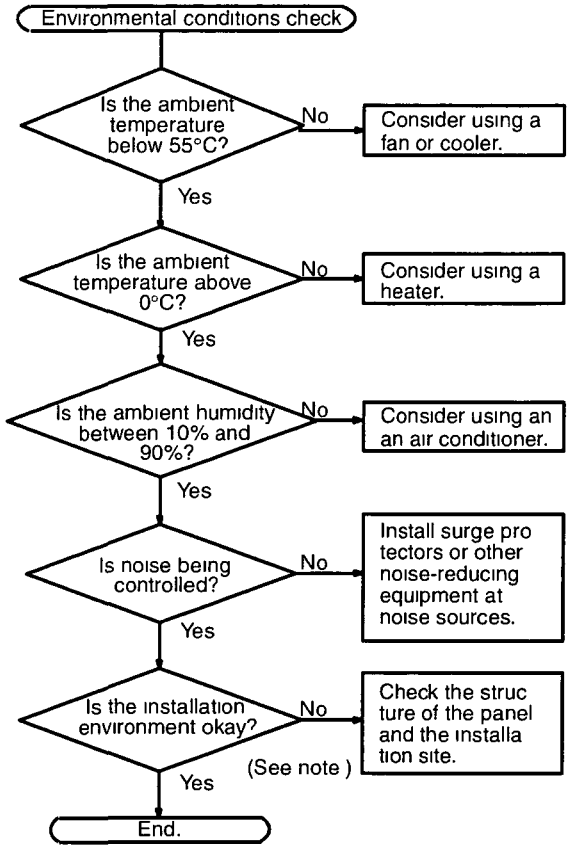

Note Check for corrosive gases, flammable gases, dust, dirt, salts, metal dust, direct light, water, oils, and chemicals.

11-3 Troubleshooting Racks and Units

CPU Racks and Standard Expansion Racks

Symptom	Cause	Remedy
POWER indicator is not lit.	PCB short-circuited or damaged.	Replace Power Supply Unit.
	(1) Error in program.	Correct program
	(2) Power line is faulty.	Replace Power Supply Unit.
RUN output* does not turn ON. RUN indicator lit. (*CJ1W-PA205R)	Internal circuitry of Power Supply Unit is faulty.	Replace Power Supply Unit.
Serial Communications Unit or CPU Bus Unit does not operate or malfunctions.	(1) The I/O Connecting Cable is faulty. (2) The I/O bus is faulty.	Replace the I/O Connecting Cable Replace the I/O Control Unit or I/O Interface Unit.
Bits do not operate past a certain point.		
Error occurs in units of 8 points.		
I/O bit turns ON		
All bits in one Unit do not turn ON.		

Special I/O Units

Refer to the *Operation Manual* for the Special I/O Unit to troubleshoot any other errors.

Symptom	Cause	Remedy
The ERH and RUN indicators on the Special I/O Unit are lit.	I/O refreshing is not being performed for the Unit from the CPU Unit (CPU Unit monitoring error). It's possible that cyclic refreshing has been disabled for the Special I/O Unit in the Cyclic Refresh Disable Setting in the PLC Setup (i.e., the bit corresponding to the unit number has been set to 1).	Change the bit corresponding to the unit number to 0 to enable cyclic refreshing, or make sure that the Unit is refreshed from the program using IORF at least once every 11 s.

CJ Long-distance Expansion Racks

Symptom	Cause	Remedy
CPU Unit won't operate. (No response to Programming Devices and no CPU Unit indicators are lit.)	(1) Power is not turned ON to an Expansion Rack.	Turn ON power to all Expansion Racks.
	(2) An Expansion Rack is not connected correctly.	Recheck the connections and configuration using information in *2-3-3 CJ-series Expansion Racks, 3-5 I/O Control Units and I/O Interface Units.*
	(3) An I/O Connecting Cable is not wired correctly.	Reconnect the I/O Connecting Cables in the correct order for output and input connectors.
	(4) A Unit is faulty.	Gradually remove/replace Units to determine the Unit that is faulty, including the Power Supply Unit, I/O Units, I/O Control/ Interface Unit, and I/O Connecting Cable.
Expansion Rack not detected.	(1) A Terminator is not connected.	If the TERM indicator is lit, connect a Terminator.
	(2) An Expansion Rack is not connected correctly.	Recheck the connections and configuration using information in *2-3-3 CJ-series Expansion Racks, 3-5 I/O Control Units and I/O Interface Units.*
	(3) A Unit is faulty.	Gradually remove/replace Units to determine the Unit that is faulty, including the Power Supply Unit, I/O Units, I/O Control/ Interface Unit, and I/O Connecting Cable.
I/O bus error or I/O verification error occurs.	(1) An I/O Connecting Cable or Terminator connection is faulty.	Check that I/O Connecting Cables and Terminators are connected correctly.
	(2) Noise or other external factor.	Separate all cables from possible sources of noise or place them in metal ducts.
	(3) A Unit is faulty.	Gradually remove/replace Units to determine the Unit that is faulty, including the Power Supply Unit, I/O Units, I/O Control/ Interface Unit, and I/O Connecting Cable.
Cycle time is too long.	(1) A CPU Bus Unit that is allocated many words (e.g., Controller Link Unit) is mounted to a CJ Long-distance Expansion Rack.	Move the CPU Bus Unit to the CPU Rack.
	(2) A Unit is faulty.	Gradually remove/replace Units to determine the Unit that is faulty, including the Power Supply Unit, I/O Units, I/O Control/ Interface Unit, and I/O Connecting Cable.
I/O Control Unit and I/O Interface Units do not appear on CX-Programmer I/O table.	This is not an error. These Units are not allocated I/O words and thus are not registered in the I/O tables.	---

Input Units

Symptom	Cause	Remedy
Not all inputs turn ON or indicators are not lit.	(1) Power is not supplied to Input Unit.	Supply power
	(2) Supply voltage is low.	Adjust supply voltage to within rated range.
	(3) Terminal block mounting screws are loose.	Tighten screws.
	(4) Faulty contact of terminal block connector.	Replace terminal block connector.
Not all inputs turn ON (indicator lit).	Input circuit is faulty. (There is a short at the load or something else that caused an overcurrent to flow.)	Replace Unit.
Not all inputs turn OFF.	Input circuit is faulty.	Replace Unit.
Specific bit does not turn ON.	(1) Input device is faulty.	Replace input devices.
	(2) Input wiring disconnected.	Check input wiring
	(3) Terminal block screws are loose.	Tighten screws
	(4) Faulty terminal block connector contact.	Replace terminal block connector.
	(5) Too short ON time of external input.	Adjust input device
	(6) Faulty input circuit	Replace Unit.
	(7) Input bit number is used for output instruction.	Correct program.
Specific bit does not turn OFF.	(1) Input circuit is faulty.	Replace Unit.
	(2) Input bit number is used for output instruction.	Correct program.
Input irregularly turns ON/OFF.	(1) External input voltage is low or unstable.	Adjust external input voltage to within rated range.
	(2) Malfunction due to noise.	Take protective measures against noise, such as: (1) Increase input response time (PLC Setup) (2) Install surge suppressor. (3) Install insulation transformer. (4) Install shielded cables between the Input Unit and the loads.
	(3) Terminal block screws are loose.	Tighten screws
	(4) Faulty terminal block connector contact.	Replace terminal block connector.
Error occurs in units of 8 points or 16 points, i.e., for the same common.	(1) Common terminal screws are loose.	Tighten screws
	(2) Faulty terminal block connector contact.	Replace terminal block connector.
	(3) Faulty data bus	Replace Unit.
	(4) Faulty CPU	Replace CPU.
Input indicator is not lit in normal operation.	Faulty indicator or indicator circuit.	Replace Unit.

Output Units

Symptom	Cause	Remedy
Not all outputs turn ON	(1) Load is not supplied with power.	Supply power
	(2) Load voltage is low.	Adjust voltage to within rated range.
	(3) Terminal block screws are loose.	Tighten screws
	(4) Faulty terminal block connector contact.	Replace terminal block connector.
	(5) An overcurrent (possibly caused by a short at the load) resulted in a blown fuse in the Output Unit. (Some Output Units provide an indicator for blown fuses.)	Replace fuse or Unit.
	(6) Faulty I/O bus connector contact.	Replace Unit.
	(7) Output circuit is faulty.	Replace Unit.
	(8) If the INH indicator is lit, the Output OFF Bit (A50015) is ON.	Turn A50015 OFF.
Not all outputs turn OFF	Output circuit is faulty.	Replace Unit.
Output of a specific bit number does not turn ON or indicator is not lit	(1) Output ON time too short because of a mistake in programming.	Correct program to increase the time that the output is ON.
	(2) Bit status controlled by multiple instructions.	Correct program so that each output bit is controlled by only one instruction.
	(3) Faulty output circuit.	Replace Unit.
Output of a specific bit number does not turn ON (indicator lit).	(1) Faulty output device.	Replace output device.
	(2) Break in output wiring.	Check output wiring.
	(3) Loose terminal block screws.	Tighten screws.
	(4) Faulty terminal block connector faulty.	Replace terminal block connector.
	(5) Faulty output bit.	Replace relay or Unit.
	(6) Faulty output circuit.	Replace Unit.
Output of a specific bit number does not turn OFF (indicator is not lit).	(1) Faulty output bit.	Replace relay or Unit.
	(2) Bit does not turn OFF due to leakage current or residual voltage.	Replace external load or add dummy resistor.
Output of a specific bit number does not turn OFF (indicator lit).	(1) Bit status controlled by multiple instructions.	Correct program.
	(2) Faulty output circuit.	Replace Unit.
Output irregularly turns ON/ OFF.	(1) Low or unstable load voltage.	Adjust load voltage to within rated range
	(2) Bit status controlled by multiple instructions.	Correct program so that each output bit is controlled by only one instruction.
	(3) Malfunction due to noise.	Protective measures against noise: (1) Install surge suppressor. (2) Install insulation transformer. (3) Use shielded cables between the Output Unit and the loads.
	(4) Terminal block screws are loose.	Tighten screws.
	(5) Faulty terminal block connector contact.	Replace terminal block connector.
Error occurs in units of 8 points or 16 points, i.e., for the same common.	(1) Loose common terminal screw.	Tighten screws.
	(2) Faulty terminal block connector contact.	Replace terminal block connector.
	(3) An overcurrent (possibly caused by a short at the load) resulted in a blown fuse in the Output Unit.	Replace fuse or Unit.
	(4) Faulty data bus.	Replace Unit.
	(5) Faulty CPU.	Replace CPU.
Output indicator is not lit (operation is normal).	Faulty indicator.	Replace Unit.

SECTION 12
Inspection and Maintenance

This section provides inspection and maintenance information.

12-1 Inspections 432
12-1-1 Inspection Points 432
12-1-2 Unit Replacement Precautions 433
12-2 Replacing User-serviceable Parts 434

12-1 Inspections

Daily or periodic inspections are required in order to maintain the PLC's functions in peak operating condition.

12-1-1 Inspection Points

Although the major components in CJ-series PLCs have an extremely long life time, they can deteriorate under improper environmental conditions. Periodic inspections are thus required to ensure that the required conditions are being kept.

Inspection is recommended at least once every six months to a year, but more frequent inspections will be necessary in adverse environments.

Take immediate steps to correct the situation if any of the conditions in the following table are not met.

No.	Item	Inspection	Criteria	Action
1	Source Power Supply	Check for voltage fluctuations at the power supply terminals.	The voltage must be within the allowable voltage fluctuation range. (See note.)	Use a voltage tester to check the power supply at the terminals. Take necessary steps to bring voltage fluctuations within limits.
2	I/O Power Supply	Check for voltage fluctuations at the I/O terminals.	Voltages must be within specifications for each Unit.	Use a voltage tester to check the power supply at the terminals. Take necessary steps to bring voltage fluctuations within limits.
3	Ambient environment	Check the ambient temperature. (Inside the control panel if the PLC is in a control panel.)	0 to 55°C	Use a thermometer to check the temperature and ensure that the ambient temperature remains within the allowed range of 0 to 55°C.
		Check the ambient humidity. (Inside the control panel if the PLC is in a control panel.)	Relative humidity must be 10% to 90% with no condensation.	Use a hygrometer to check the humidity and ensure that the ambient humidity remains within the allowed range.
		Check that the PLC is not in direct sunlight.	Not in direct sunlight	Protect the PLC if necessary.
		Check for accumulation of dirt, dust, salt, metal filings, etc.	No accumulation	Clean and protect the PLC if necessary.
		Check for water, oil, or chemical sprays hitting the PLC.	No spray on the PLC	Clean and protect the PLC if necessary.
		Check for corrosive or flammable gases in the area of the PLC.	No corrosive or flammable gases	Check by smell or use a sensor.
		Check the level of vibration or shock.	Vibration and shock must be within specifications.	Install cushioning or shock absorbing equipment if necessary.
		Check for noise sources near the PLC.	No significant noise sources	Either separate the PLC and noise source or protect the PLC.

No.	Item	Inspection	Criteria	Action
4	Installation and wiring	Check that each Unit is connected and locked to the next Unit securely.	No looseness	Press the connectors together completely and lock them with the sliders.
		Check that cable connectors are fully inserted and locked.	No looseness	Correct any improperly installed connectors.
		Check for loose screws in external wiring.	No looseness	Tighten loose screws with a Phillips-head screwdriver.
		Check crimp connectors in external wiring.	Adequate spacing between connectors	Check visually and adjust if necessary.
		Check for damaged external wiring cables.	No damage	Check visually and replace cables if necessary.
5	User-serviceable parts	Check whether the battery has reached its service life. CJ1 and CJ1-H CPU Units: CJ1W-BAT01 CJ1M CPU Units: CJ1W-BAT01 Battery	Service life expectancy is 5 years at 25°C, less at higher temperatures. (From 0.75 to 5 years depending on model, power supply rate, and ambient temperature.)	Replace the battery when its service life has passed even if a battery error has not occurred. (Battery life depends upon the model, the percentage of time in service, and ambient conditions.)

Note The following table shows the allowable voltage fluctuation ranges for source power supplies.

Supply voltage	Allowable voltage range
100 to 240 V AC	85 to 264 V AC
24 V DC	19.2 to 28.8 V DC

Tools Required for Inspections

Required Tools

- Slotted and Phillips-head screwdrivers
- Voltage tester or digital voltmeter
- Industrial alcohol and clean cotton cloth

Tools Required Occasionally

- Synchroscope
- Oscilloscope with pen plotter
- Thermometer and hygrometer (humidity meter)

12-1-2 Unit Replacement Precautions

Check the following after replacing any faulty Unit.

- Do not replace a Unit until the power is turned OFF.
- Check the new Unit to make sure that there are no errors.
- If a faulty Unit is being returned for repair, describe the problem in as much detail as possible, enclose this description with the Unit, and return the Unit to your OMRON representative.
- For poor contact, take a clean cotton cloth, soak the cloth in industrial alcohol, and carefully wipe the contacts clean. Be sure to remove any lint prior to remounting the Unit.

Note

1. When replacing a CPU Unit, be sure that not only the user program but also all other data required for operation is transferred to or set in the new CPU Unit before starting operation, including DM Area and HR Area settings. If data area and other data are not correct for the user program, unexpected accidents may occur. Be sure to include the routing tables, Controller Link Unit data link tables, network parameters, and other CPU

Bus Unit data, which are stored as parameters in the CPU Unit. Refer to the CPU Bus Unit and Special I/O Unit operation manuals for details on the data required by each Unit.

2. The simple backup operation can be used to store the user program and all parameters for the CJ1-H CPU Unit, DeviceNet Units, Serial Communications Units, and other specific Units in a Memory Card as backup files. A Memory Card and the simple backup operation can be used to easily restore data after replacing any of these Units. Refer to the *CS/CJ Series Programming Manual* (W394) for details.

12-2 Replacing User-serviceable Parts

The following parts should be replaced periodically as preventative maintenance. The procedures for replacing these parts are described later in this section.

- Battery (backup for the CPU Unit's internal clock and RAM)

Battery Functions

The battery maintains the internal clock and the following data of the CPU Unit's RAM while the main power supply is OFF.

- The user program
- The PLC Setup
- Retained regions of I/O memory (such as the Holding Area and DM Area)

If the battery is not installed or battery voltage drops too low, the internal clock will stop and the data in RAM will be lost when the main power supply goes OFF.

Battery Service Life and Replacement Period

At 25°C, the maximum service life for batteries is five years whether or not power is supplied to the CPU Unit while the battery is installed. The battery's lifetime will be shorter when it is used at higher temperatures and when power is not supplied to the CPU Unit for long periods.

The following table shows the approximate minimum lifetimes and typical lifetimes for the backup battery (total time with power not supplied).

Model	Approx. maximum lifetime	Approx. minimum lifetime (See note.)	Typical lifetime (See note.)
CJ1G-CPU□□	5 years	6,500 hours (0.75 years)	43,000 hours (5 years)
CJ1□-CPU□□H	5 years	6,500 hours (0.75 years)	43,000 hours (5 years)
CJ1M-CPU□□	5 years	13,000 hours (1.5 years)	43,000 hours (5 years)

Note The minimum lifetime is the memory backup time at an ambient temperature of 55°C. The typical lifetime is the memory backup time at an ambient temperature of 25°C.

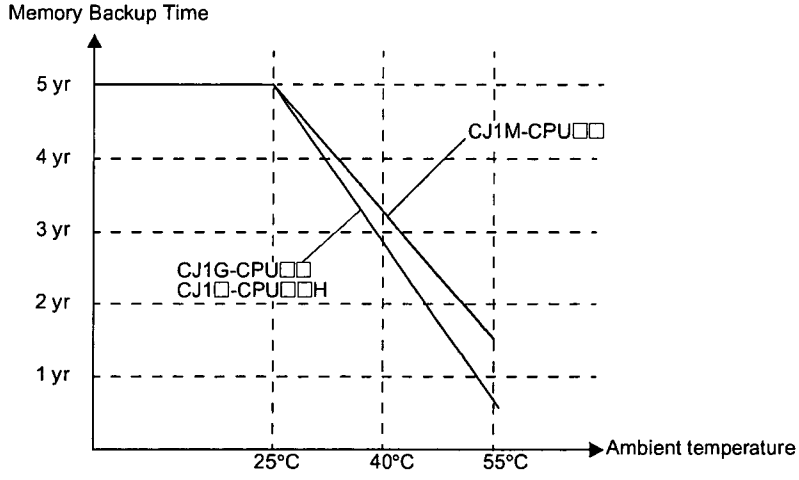

This graphic is for reference only.

Low Battery Indicators

If the PLC Setup has been set to detect a low-battery error, the ERR/ALM indicator on the front of the CPU Unit will flash when the battery is nearly discharged.

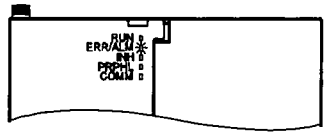

When the ERR/ALM indicator flashes, connect a Programming Console to the peripheral port and read the error message. If the message "BATT LOW" appears on the Programming Console* and the Battery Error Flag (A40204) is ON*, first check whether the battery is properly connected to the CPU Unit. If the battery is properly connected, replace the battery as soon as possible.

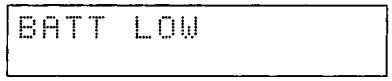

Once a low-battery error has been detected, it will take 5 days before the battery fails assuming that power has been supplied at lease once a day. Battery failure and the resulting loss of data in RAM can be delayed by ensuring that the CPU Unit power is not turned OFF until the battery has been replaced.

Note

1. *The PLC Setup must be set to detect a low-battery error (Detect Low Battery). If this setting has not been made, the BATT LOW error message will not appear on the Programming Console and the Battery Error Flag (A40204) will not go ON when the battery fails.
2. The battery will discharge faster at higher temperatures, e.g., 4 days at 40°C and 2 days at 55°C.

Replacement Battery

Use the CPM2A-BAT01 (for CJ1 and CJ1-H) or CJ1W-BAT01 (for CJ1M) Battery Set. Be sure to install a replacement battery within two years of the production date shown on the battery's label.

CJ1 and CJ1-H CPU Units

Production Date

OMRON
CPM2A-BAT01
01-04

Manufactured in April 2001

CJ1M CPU Units

Production Date

OMRON
CJ1W-BAT01
02-06

Manufactured in June 2002

Replacement Procedure

Use the following procedure to replace the battery when the previous battery has become completely discharged. You must complete this procedure within five minutes after turning OFF the power to the CPU Unit to ensure memory backup.

Note

1. The battery can be replaced without turning OFF the power supply. To do so, always touch a grounded piece of metal to discharge static electricity from your body before starting the procedure.
2. After replacing the battery, connect a Programming Device and clear the battery error.

Procedure

1,2,3...

1. Turn OFF the power to the CPU Unit.

or If the CPU Unit has not been ON, turn it ON for at least five minutes and then turn it OFF.

Note If power is not turned ON for at least five minutes before replacing the battery, the capacitor that backs up memory when the battery is removed will not be fully charged and memory may be lost before the new battery is inserted.

2. Open the compartment on the upper left of the CPU Unit and carefully draw out the battery.
3. Remove the battery connector.
4. Connect the new battery, place it into the compartment, and close the cover.

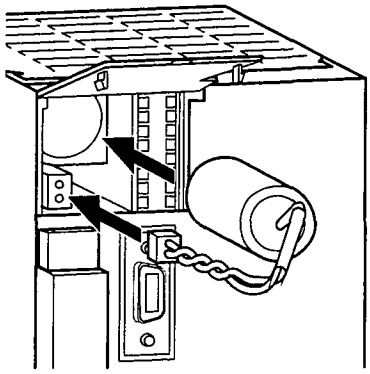

The battery error will automatically be cleared when a new battery is inserted.

⚠ **WARNING** Never short-circuit the battery terminals; never charge the battery; never disassemble the battery; and never heat or incinerate the battery. Doing any of these may cause the battery to leak, burn, or rupturing resulting in injury, fire, and possible loss of life or property. Also, never use a battery that has been dropped on the floor or otherwise subject to shock. It may leak.

UL standards require that batteries be replaced by experienced technicians. Always place an experienced technician in charge or battery replacement.

KAWASAKI

SPARE PARTS & SPECIAL TOOLS
OF

KAWASAKI SIDE THRUSTER
KT-157B3
FOR

4,150TEU Class Container Carrier

HYUNDAI HEAVY INDUSTRIES CO.,LTD.
S.No.H1630/1,1671/2,1699-1701,1733

(REMARKS)
1.It is better to replace the spare parts of "O" ring which is passed more than three(3) years after delivery of the vessel by new them.
2.The following checking for the spare "O" rings should be carried out prior to fitting on the equipment.
(1)Hardness by shore
(2)Bend them in order to confirm the no cracks and no damages.

DELIVERY YARD		ORDER NO. 31KB068 ,70,72,74,76,78,80,82	KAWASAKI HEAVY INDUSTRIES, LTD. GAS TURBINE & MACHINERY COMPANY MACHINERY DIVISION MARINE MACHINERY DEP'T. PROPULSION MACHINERY ENG'NG SECT.
		NOTES	
KPME 工務	5		
KPME 工事			
工務		REVISION	
組立		R1: Spare parts of starter panel added on Page 14~16. Feb.23,2005 M.I, M.O, J.C	
検査		R2: Matched with latest spec. on Page 16, Apr.13,2005 M.I, M.O,	APPROVED T. Hamada
		R3: Page 17 added. May 9,2005 M.I,	CHECKED M. Ogata
控	1	R4: Latest spec. followed on Page 14, June 1,2005 M.I,	DRAWN M. Ishihara
ISSUE		DATE November 24, 2004	DRAWING NO. S4-977-365 R4

(SHEETS COVER INC)

SPARE PARTS						PAGE		1
KT-157B1, B3 SIDE THRUSTER PROPELLER & GEAR CASE PART						SHIP NO.		
						BOX NO.		
NO	NAME 名 称	SKETCH 略 図 寸 法	MATERIAL 材 質	SUPPLY PER SHIP WORK 常備	SUPPLY PER SHIP SPARE 予備	DRAWING NO. 参照図面	PART NO. 符号	REMARKS 備 考
1	"O" RING "O" リング	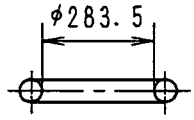	NBR	4	4	S8418626	227	FOR PROPELLER BLADE プロペラ羽根用
2	"O" RING "O" リング		NBR	4	4	P230	228	FOR CRANK DISK クランクディスク用
3	"O" RING "O" リング	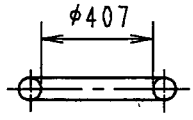	NBR	1	1	C4401127	229	FOR CROSSHEAD PISTON ピストン用
4	"O" RING "O" リング		NBR	8	8	G4	230	FOR FIXING BOLT フィクシングボルト用
5	"O" RING "O" リング	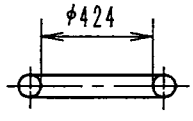	NBR	1	1	C4401745	247	FOR PROP. HUB プロペラハブ用
6	"O" RING "O" リング		NBR	1	1	C4401745	248	FOR SHAFT HOOD シャフトフード用
7	PACKING 銅パッキン	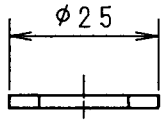	COPPER PLATE C1100P-O	3	3	25マルX16.5マル X1.6T	301	FOR PLUG OF PROP. HUB &GEAR CASE プロペラハブ及びギヤケースプラグ用
8	WIRE 針 金	φ9 X 0.25m	STAINLESS WIRE	8	8		10	FOR BLADE BOLT ブレードボルト回り止め用
9	WIRE 針 金	φ1.6 X 3.0m	STAINLESS WIRE	1	1		215	FOR FIXING BOLT 継手ボルト回り止め用
10	WIRE 針 金	φ4.0 X 0.1m	STAINLESS WIRE	1	1		225	FOR PLUG プラグ用
MFR'S NAME & ADDRESS		KAWASAKI HEAVY INDUSTRIES, LTD. KOBE WORKS. HIGASHIKAWASAKI-CHO, CHUO-KU, KOBE 650-8670 JAPAN 川崎重工業株式会社 神戸工場, 機械ビジネスセンター 神戸市中央区東川崎町3丁目1番1号						

SPARE PARTS						PAGE		2
KT-157B1, B3 SIDE THRUSTER PROPELLER & GEAR CASE PART						SHIP NO.		
						BOX NO.		
NO	NAME 名称	SKETCH 略図寸法	MATERIAL 材質	SUPPLY PER SHIP WORK 常備	SUPPLY PER SHIP SPARE 予備	DRAWING NO. 参照図面	PART NO. 符号	REMARKS 備考
11	"O" RING "O" リング	φ279.5	NBR	1	1	P280	231	FOR INPUT HOUSING インプットハウジング用
12	"O" RING "O" リング	φ119.6	NBR	1	1	P120	232	FOR INPUT SHAFT SLEEVE インプットシャフトスリーブ用
13	"O" RING "O" リング	φ738	NBR	1	1	C4401745	249	FOR PROPELLER SHAFT HOUSING プロペラシャフトハウジング用
14	"O" RING "O" リング	φ240	NBR	1	1	C4401745	250	FOR STUFFING BOX スタフィングボックス用
18	"O" RING "O" リング	φ179.3	NBR	1	1	G180	236	FOR CHECKING COVER のぞき窓ふた用
19	"O" RING "O" リング	φ688	NBR	1	1	C4401745	251	FOR GEAR CASE ギヤケース用
20								
MFR'S NAME & ADDRESS	KAWASAKI HEAVY INDUSTRIES, LTD. KOBE WORKS, HIGASHIKAWASAKI-CHO, CHUO-KU, KOBE 650-8670 JAPAN 川崎重工業株式会社　神戸工場，機械ビジネスセンター　神戸市中央区東川崎町3丁目1番1号							

SPARE PARTS							PAGE		3
KT-157B1, B3 SIDE THRUSTER PROPELLER & GEAR CASE PART							SHIP NO.		
							BOX NO.		
NO	NAME 名称	SKETCH 略図寸法	MATERIAL 材質	SUPPLY PER SHIP WORK 常備	SUPPLY PER SHIP SPARE 予備	DRAWING NO. 参照図面	PART NO. 符号	REMARKS 備考
21	"O" RING "O" リング	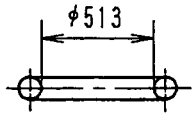	NBR	1	1	C4401745	253	FOR GEAR CASE CAP ギヤケースキャップ用
22	"O" RING "O" リング	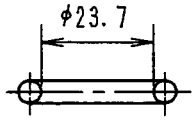	NBR	1	1	P24	240	FOR SUB PLATE (TRANSMITTER) サブプレート用(発信器)
23	"O" RING "O" リング		NBR	1	1	P35	241	FOR OIL ENTRY TUBE 圧油導入管用
24	"O" RING "O" リング		NBR	2	2	G125	242	FOR FEED RING 給油環用
25	"O" RING "O" リング	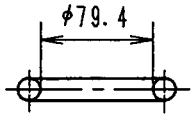	NBR	1	1	G80	243	FOR FEED SHAFT 給油軸用
26	WIRE 針金	φ5 X 2.5m	STAINLESS STEEL	1	1		216	FOR BOLT OF FAIRING COVER, PROPELLER SHAFT HOUSING フェアリングカバー, プロペラシャフトハウジング取付ボルト用
27	GASKET ガスケット	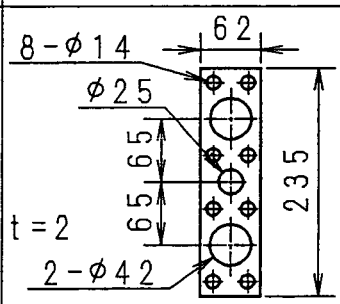	JOINT SHEET (NON-ASBESTOS)	1	1	S8454511 R1	76	FOR MANIFOLD 圧油パイプ側マニホールド用
28	GASKET ガスケット	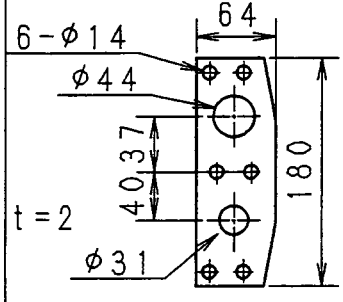	JOINT SHEET (NON-ASBESTOS)	1	1	S8454512 R1	77	FOR MANIFOLD 重力油側マニホールド用
MFR'S NAME & ADDRESS	KAWASAKI HEAVY INDUSTRIES, LTD. KOBE WORKS, HIGASHIKAWASAKI-CHO, CHUO-KU, KOBE 650-8670 JAPAN 川崎重工業株式会社 神戸工場, 機械ビジネスセンター 神戸市中央区東川崎町3丁目1番1号							

SPARE PARTS						PAGE		4
KT-157B1, B3 SIDE THRUSTER PIPING PART						SHIP NO.		
						BOX NO.		
NO	NAME 名　称	SKETCH 略 図 寸 法	MATERIAL 材　質	SUPPLY PER SHIP WORK 常備	SUPPLY PER SHIP SPARE 予備	DRAWING NO. 参照図面	PART NO. 符号	REMARKS 備　考
29	"O" RING "O" リング	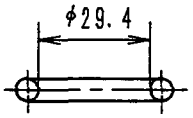	NBR	2	2	G30	145 -1	FOR PIPE JOINT スレッドニップル (ニップル側)
30	"O" RING "O" リング	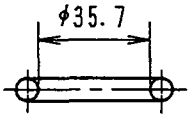	NBR	2	2	P36	145 -2	FOR PIPE JOINT スレッドニップル (ネジ込側)
31	"O" RING "O" リング	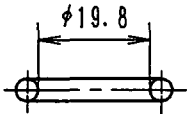	NBR	2	2	P20	147 -1	FOR FITTING 管継手用
34	"O" RING "O" リング	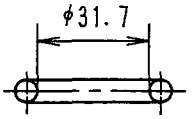	NBR	2	2	P32	237	FOR OIL TUBE 圧油パイプ(1)(2)用
35	"O" RING "O" リング	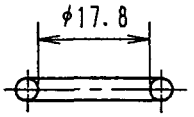	NBR	1	1	P18	238	FOR OIL TUBE ("W" PORT LINE) ハンドポンプ配管用
36	"O" RING "O" リング	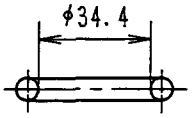	NBR	2	2	G35	239	FOR FLANGE ("A1" & "A2" PORT LINE) 圧油パイプフランジ用
37								
38								
MFR'S NAME & ADDRESS	KAWASAKI HEAVY INDUSTRIES, LTD. KOBE WORKS, HIGASHIKAWASAKI-CHO, CHUO-KU, KOBE 650-8670 JAPAN 川崎重工業株式会社　神戸工場，機械ビジネスセンター　神戸市中央区東川崎町3丁目1番1号							

SPARE PARTS							PAGE	5
KT-157B1, B3 SIDE THRUSTER PIPING PART							SHIP NO.	
							BOX NO.	
NO	NAME 名称	SKETCH 略図寸法	MATERIAL 材質	SUPPLY PER SHIP WORK 常備	SUPPLY PER SHIP SPARE 予備	DRAWING NO. 参照図面	PART NO. 符号	REMARKS 備考
39	GASKET ガスケット	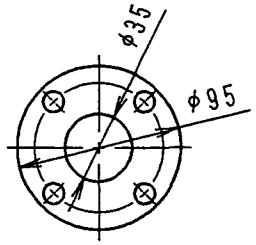	JOINT SHEET (350SJR) NON ASBESTOS	1	1	G-GS1-5KX25 ノンアス	330	FOR FLANGE ("R" PORT LINE) "R"ポート 相フランジ用
40	GASKET ガスケット	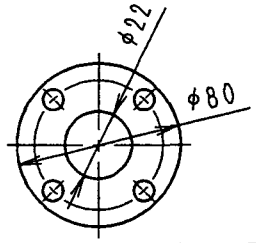	JOINT SHEET (350SJR) NON ASBESTOS	1	1	G-GS1-5KX15 ノンアス	331	FOR FLANGE ("W" PORT LINE) "W"ポート 相フランジ用
41	GASKET ガスケット	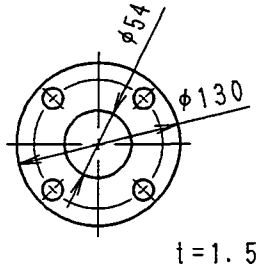	JOINT SHEET (350SJR) NON ASBESTOS	1	1	G-GS2-5KX50 ノンアス	78	FOR FLANGE ("H" PORT LINE) 戻り管 相フランジ用
42	GASKET ガスケット	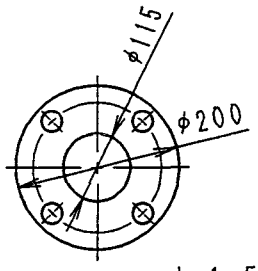	JOINT SHEET (350SJR) NON ASBESTOS	1	1	G-GS1-5KX100 ノンアス	259	FOR GRAVITY TANK (OIL GAUGE) 重力タンク用 (油面計)
43	GASKET ガスケット	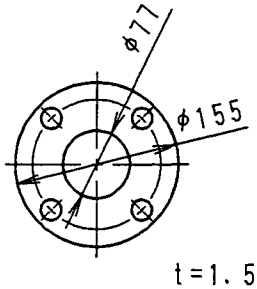	JOINT SHEET (350SJR) NON ASBESTOS	2	2	G-GS1-5KX65 ノンアス	260	FOR GRAVITY TANK (PIPING) 重力タンク用 (相フランジ)
MFR'S NAME & ADDRESS	KAWASAKI HEAVY INDUSTRIES, LTD. KOBE WORKS, HIGASHIKAWASAKI-CHO, CHUO-KU, KOBE 650-8670 JAPAN 川崎重工業株式会社　神戸工場，機械ビジネスセンター　神戸市中央区東川崎町3丁目1番1号							

SPARES	PAGE 頁	6
HYDRAULIC PUMP 油圧ポンプ（25-6*8D*）	SUPPLY 数量	
	BOX No. 予備品箱番号	

No. 番号	NAME 名称	SKETCH 略図	MATERIAL 材料	SUPPLY PER SET 数量		DRAWING 関係図面		REMARKS 備考
				WORKING 常備	SPARE 予備	No. 図面番号	PART No. 符号	
1	MECHANICAL SEAL メカニカルシール	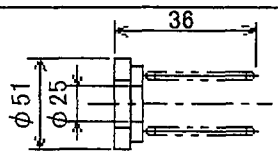		1	1		510	PM255136 AC6MN
2	O-RING O-リング	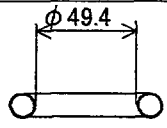	VITON バイトン	1	1		531	G50
3	O-RING O-リング	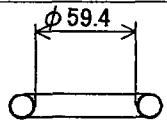	VITON バイトン	1	1		541	G60
4	O-RING O-リング	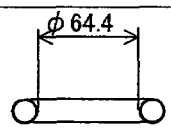	VITON バイトン	1	1		531-1	G65
5	O-RING O-リング	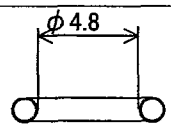	VITON バイトン	2	2		457	P5
6	O-RING O-リング (FOR THREAD NIPPLE)	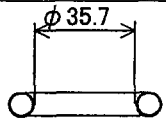	VITON バイトン	1	1		031	P36
7	O-RING O-リング (FOR THREAD NIPPLE)	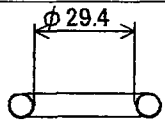	VITON バイトン	2	2		032	G30
8	O-RING O-リング (FOR THREAD NIPPLE)	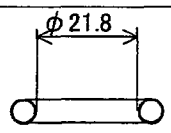	VITON バイトン	1	1		032	P22

(FOR KT-32～187 SERIES)

MFR'S NAME & ADDRESS 製造所名及び所在地	KAWASAKI PRECISION MACHINERY LTD. 株式会社 カワサキ プレシジョン マシナリ HAZETANI-CHO NISHI-KU, KOBE JAPAN 神戸市 西区 櫨谷町 松本234番地

SPARES	PAGE 頁	7
CARTRIDGE VALVES カートリッジ弁 (RVEA、LKFC、XDCA、CXHA、CXDA、GBP/S)	SUPPLY 数 量	
	BOX No. 予備品箱番号	

No. 番号	NAME 名 称	SKETCH 略 図	MATERIAL 材 料	SUPPLY PER SET 数 量		DRAWING 関係図面		REMARKS 備 考
				WORKING 常備	SPARE 予備	No. 図面番号	PART No. 符号	
1	O-RING O-リング	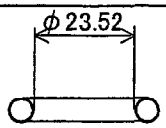	NBR ニトリルゴム	5	2	VZ990-202-007	1	AS568 No.021
2	O-RING O-リング	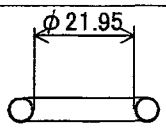	NBR ニトリルゴム	6	3	VZ990-202-007 VZ990-203-007	2	AS568 No.020
3	O-RING O-リング	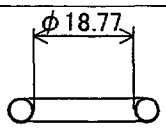	NBR ニトリルゴム	6	3	VZ990-202-007 VZ990-203-007	3	AS568 No.018
4	BACK-UP RING バックアップリング	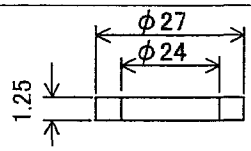	SYNTHETIC RESIN 合成樹脂	5	2	VZ990-202-007	4	
5	BACK-UP RING バックアップリング	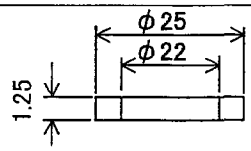	SYNTHETIC RESIN 合成樹脂	6	3	VZ990-202-007 VZ990-203-007	5	
6	BACK-UP RING バックアップリング	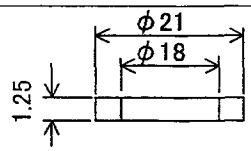	SYNTHETIC RESIN 合成樹脂	12	6	VZ990-202-007 VZ990-203-007	6	
7	O-RING O-リング	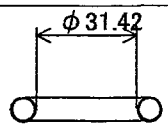	NBR ニトリルゴム	1	1	VZ990-016-007	1	AS568 No.124
8	O-RING O-リング	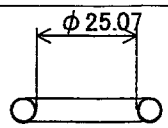	NBR ニトリルゴム	1	1	VZ990-016-007	2	AS568 No.120
9	BACK-UP RING バックアップリング	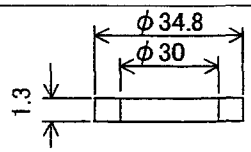	SYNTHETIC RESIN 合成樹脂	1	1	VZ990-016-007	3	
10	BACK-UP RING バックアップリング	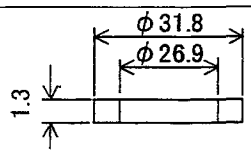	SYNTHETIC RESIN 合成樹脂	2	2	VZ990-016-007	4	

MFR'S NAME & ADDRESS 製造所名及び所在地	KAWASAKI PRECISION MACHINERY LTD. 株式会社 カワサキ プレシジョン マシナリ HAZETANI-CHO NISHI-KU, KOBE JAPAN 神戸市 西区 櫨谷町 松本234番地

SPARES

PAGE 頁: 8

SUPPLY 数量:

BOX No. 予備品箱番号:

CARTRIDGE VALVES
カートリッジ弁 (RVEA、LKFC、FDCB、CXFA、CXDA、GBP/S)

No. 番号	NAME 名称	SKETCH 略図	MATERIAL 材料	SUPPLY PER SET 数量 WORKING 常備	SUPPLY PER SET 数量 SPARE 予備	DRAWING 関係図面 No. 図面番号	DRAWING 関係図面 PART No. 符号	REMARKS 備考
11	O-RING O-リング	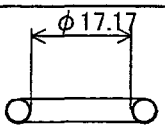	NBR ニトリルゴム	1	1	VZ990-010-007	1	AS568 No.017
12	O-RING O-リング	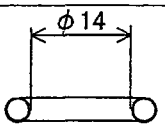	NBR ニトリルゴム	1	1	VZ990-010-007	2	AS568 No.015
13	BACK-UP RING バックアップリング	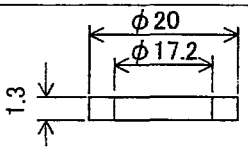	SYNTHETIC RESIN 合成樹脂	1	1	VZ990-010-007	3	
14	BACK-UP RING バックアップリング	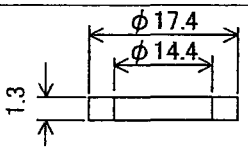	SYNTHETIC RESIN 合成樹脂	2	2	VZ990-010-007	4	
15	O-RING O-リング	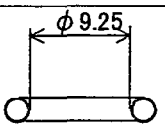	NBR ニトリルゴム	4	4	GBP/S用		AS568 No.012
					VZ990-202-007 × 2PC VZ990-203-007 × 1PC VZ990-016-007 × 1PC VZ990-010-007 × 1PC (FOR KT-157～187 SERIES)			

MFR'S NAME & ADDRESS 製造所名及び所在地	KAWASAKI PRECISION MACHINERY LTD. 株式会社 カワサキ プレシジョン マシナリ HAZETANI-CHO NISHI-KU, KOBE JAPAN 神戸市 西区 櫨谷町 松本234番地

SPARES		PAGE 頁	9
SOLENOID OPERATED VALVE 電磁切換弁 (DE6P-20-**)		SUPPLY 数 量	
		BOX No. 予備品箱番号	

No. 番号	NAME 名 称	SKETCH 略 図	MATERIAL 材 料	SUPPLY PER SET 数 量		DRAWING 関係図面		REMARKS 備 考
				WORKING 常備	SPARE 予備	No. 図面番号	PART No. 符号	
1	O-RING O-リング	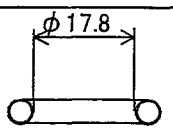	NBR ニトリルゴム	2	2		15-3	P18
2	O-RING O-リング	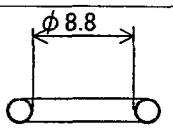	NBR ニトリルゴム	4	4		22	P9

(FOR KT-32～300 SERIES)

MFR'S NAME & ADDRESS 製造所名及び所在地	KAWASAKI PRECISION MACHINERY LTD. 株式会社 カワサキ プレシジョン マシナリ HAZETANI-CHO NISHI-KU, KOBE JAPAN 神戸市 西区 櫨谷町 松本234番地

TOOLS (1/2)							PAGE	10
KT-157B1, B3 SIDE THRUSTER							SHIP NO.	
							BOX NO.	

NO	NAME 名称	SKETCH 略図寸法	MATERIAL 材質	SUPPLY PER SHIP WORK 常備	SUPPLY PER SHIP SPARE 予備	DRAWING NO. 参照図面	PART NO. 符号	REMARKS 備考
1	SUSPENSION TOOL シャフト吊り下げ要具	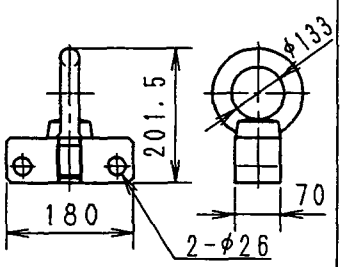	STEEL SS400	1st		S8-477-510R1	126	FOR PROPELLER SHAFT プロペラシャフト分解用
2	SOCKET HEAD BOLT 六角穴付ボルト	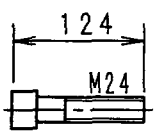	Cr-Mo STEEL SCM435 (H)	2		JIS B 1176 M24X100	188	FOR PROPELLER SHAFT プロペラシャフト分解用
3	EYEBOLT アイボルト	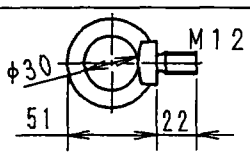	STEEL SS400	2		JIS B 1168 M12	270	
4	EYEBOLT アイボルト	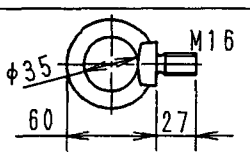	STEEL SS400	2		JIS B 1168 M16	271	
5								
6	STRAP FASTENER ライナー固定片	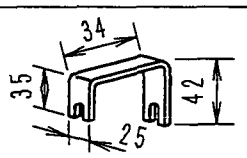	STEEL SS400	4		S4-434-879	49	FOR SHAFT SEARING 軸封水装置
7	HEX. HEAD BOLT 六角ボルト	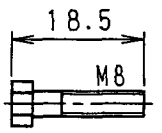	STEEL SUS316B	8		S4-434-879	49	FOR SHAFT SEARING 軸封水装置
8	TRANSPORT TOOL 吊り金具	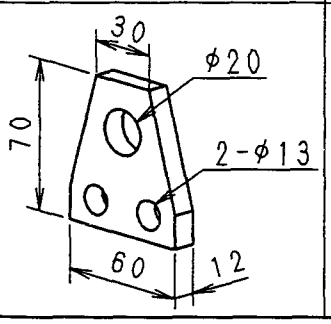	STEEL SS400	1		S4-434-879	49	FOR SHAFT SEARING 軸封水装置

MFR'S NAME & ADDRESS	KAWASAKI HEAVY INDUSTRIES, LTD. KOBE WORKS, HIGASHIKAWASAKI-CHO, CHUO-KU, KOBE 650-8670 JAPAN 川崎重工業株式会社　神戸工場，機械ビジネスセンター　神戸市中央区東川崎町3丁目1番1号

TOOLS (2/2)						PAGE		11
KT-157B1, B3 SIDE THRUSTER						SHIP NO.		
						BOX NO.		
NO	NAME 名　称	SKETCH 略 図 寸 法	MATERIAL 材　質	SUPPLY PER SHIP WORK 常備	SUPPLY PER SHIP SPARE 予備	DRAWING NO. 参照図面	PART NO. 符号	REMARKS 備　考
9	HEX. HEAD BOLT 六角ボルト	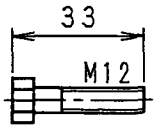	STEEL SS400	2		S4-434-879	49	FOR SHAFT SEARING 軸封水装置
10	HEX. HEAD BOLT 六角ボルト	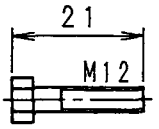	STEEL SUS316B	2		S4-434-879	49	DELIVERED WITH THE SHAFT SEARING 軸封水装置に取付けて納入
	SPARE PARTS &TOOLS BOX 予備品および 特殊要具箱	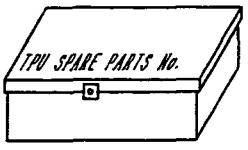	STEEL 鉄　製	1st		G4-200-200		
MFR'S NAME & ADDRESS	KAWASAKI HEAVY INDUSTRIES, LTD. KOBE WORKS, HIGASHIKAWASAKI-CHO, CHUO-KU, KOBE 650-8670 JAPAN 川崎重工業株式会社　神戸工場, 機械ビジネスセンター　神戸市中央区東川崎町3丁目1番1号							

Nabtesco

74Y54676-01 2/2

SPARE PARTS LIST
予 備 品 表

SPEC NO.

NAME
MTH Ⅲ THRUSTER REMOTE CONTROL SYSTEM

BOX NO.

NO. 項目	DESCRIPTION 品名	OUTLINE 外形図	PC. NO. 品番	個数 Q'TY WORKING PERSET	WORKING PERSHIP	SPARE	REMARKS 記事	REV. 改正
1	FUSE NCO 5A	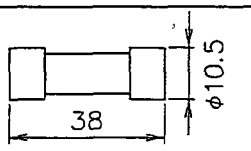	74734176 -03		2	2	UTSUNOMIYA	
2	FUSE NCO 10A	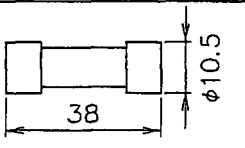	74734176 -04		2	2	UTSUNOMIYA	
3	FUSE 125V 5A	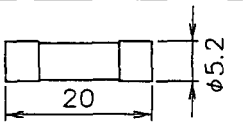	74755815 -07		4	4	FUJI	
4	FUSE 125V 10A	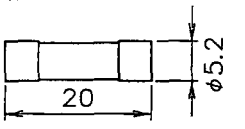	74755815 -11		2	2	FUJI	
5	POTENTIOMETER 2WDD35D-4	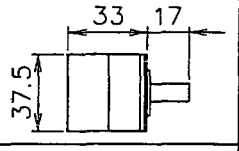	74753573 -01		4	1	2KX2	
6	SPACER M5 L=30	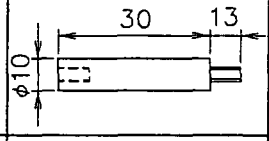	74757581 -13		–	4	FOR MAINTENANCE	
7	PORTABLE KEYPAD	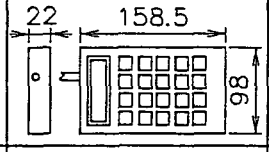	74759070 -01		–	1	WITH CABLE 1.8m, CONNECTOR FOR MAINTENANCE	

ADDRESS :
1617-1, Fukuyoshi-dai 1-chome, Nishi-ku, Kobe, 651-2413, Japan
Phone No. Kobe +81-78-967-5361 Fax. No. Kobe +81-78-967-5362

AC

SPARE PART LIST FOR INDUCTION MOTOR

SPEC : 1335KW 6P 3300V 60Hz THRUSTER

NO.	NAME	OUTLINE DWG.	Q'TY	REMARK
01	ROLLER B.R.G.	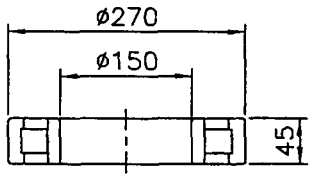	1EA/SET	NU230CM
02	ANGULAR CONTACT BALL B.R.G.	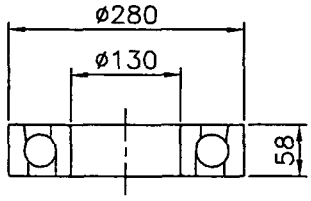	1EA/SET	7326B

SHIP NO.	SPARE PARTS LIST FOR	USE	SETS PER VESSEL
HHI: 1630 1631 1671 1672 1699 1700 1701 1733	STARTER	BOW THRUSTER	

ITEM NO	NAME OF PART	OUTLINE	QUANTITY WORKING PER SET	QUANTITY WORKING PER VESS	QUANTITY SPARE	REMARKS		BOX NO
11	FUSE WITH GPT	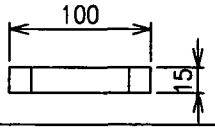	3	3	3	PL-G 1A		
12	PROTECTION SHEET OF LCD	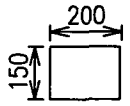			4	NT31C-KBA05		
13-1	MAGNETIC CONTACTOR SC-05	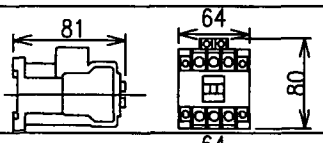	1	1	1	220V 60Hz		
13-2			4	4	1	440V 60Hz		
	MAGNETIC CONTACTOR SC-5-1	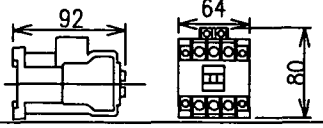				110V 60Hz		
						440V 60Hz		
15-1	THERMAL RELAY TR-0NH 2P	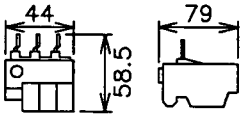	2	2	1	2.8-4.2A		
15-2			2	2	1	9-13A		
	THERMAL RELAY TR-5-1N 2P	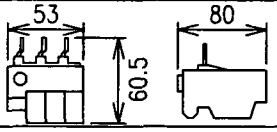				12-18A		
17-1	TIMER	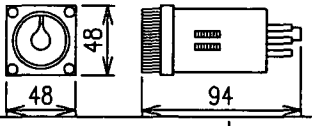	2	2	1	H3CR-A8		
17-2			2	2	1	H3CR-G8L	220V 60Hz	
17-4			1	1	1	H3CR-H8L-S	110V 60Hz	
18-1	FUSE	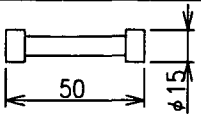	2	2	2	30A	CELLO LITE UC-1	
18-2			1	1	1	20A		
18-3			15	15	15	10A		
18-4			8	8	8	5A		
18-5			8	8	8	3A		
18-6			6	6	6	1A		
	DRIVE UNIT VACUUM MAGNET CONTACTOR CV-6HA	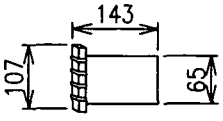				3Z9G0079G001 (AC/DC 110V)		
19-2			1	3	1	3Z9G0079G004 (AC/DC 220V)		
20-1	SIC UNIT	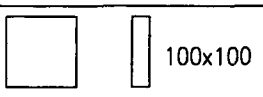	2	2	1	SIC-103		

TAIYO ELECTRIC CO., LTD.	TITLE	DRAW.NO.		SHEET NO.
1	SPARE PARTS LIST	G3-15334-SP2		SP2

12_SPL02

SHIP NO.	SPARE PARTS LIST FOR	USE	SETS PER VESSEL
HHI: 1630 1631 1671 1672 1699 1700 1701 1733	STARTER	BOW THRUSTER	

ITEM NO	NAME OF PART	OUTLINE	QUANTITY WORKING PER SET	QUANTITY WORKING PER VESS	QUANTITY SPARE	REMARKS		BOX NO.
21	GROUP RELAY UNIT GRU-16D	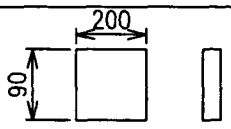	2	2	1	DC24V		
22-1	GLOBE FOR LAMP	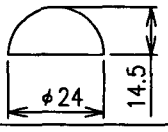	7	7	1	WHITE	DR30	
22-2			6	6	1	GREEN		
22-3			2	2	1	RED		
						ORANGE		
						BLUE		
23-2	DITTO	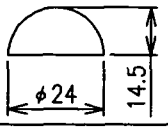	3	3	1	TRANSPARENT	DR30	
	DITTO	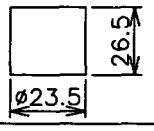				GREEN	AR30GOL	
						RED		
25-1	BULB	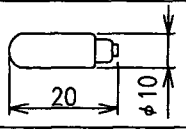	16	16	16	6.3V 1W	BA9S/13	
25-2			2	2	2	DC24V		
26	DOOR SWITCH	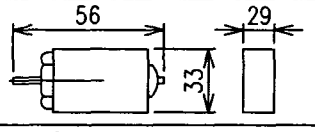	3	3	1	K244XP-2		
27-1	AUX RELAY	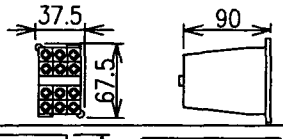	1	1	1	110V	SRC 50-2F/X 3a3b	
27-2			14	14	2	220V		
27-3			2	2	1	440V		
	AUX RELAY	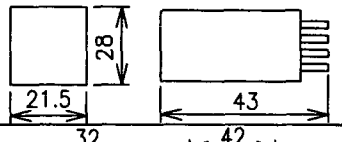				110V	MY4Z-CR	
28-2			4	4	1	220V		
							MY4Z-D	
28-4			2	2	1	DC24V		
	AUX CONTACT BLOCK	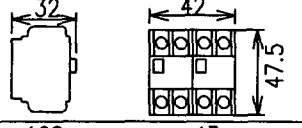				SZ-A11	1a1b	
29-2			12	12	2	SZ-A22	2a2b	
						SZ-A40	4a	
30-2	AUX RELAY	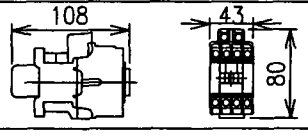	7	7	1	2a2b	SH-4 220V 60Hz	
						4a		

TAIYO ELECTRIC CO., LTD.	TITLE	DRAW.NO.		SHEET NO.
	SPARE PARTS LIST	G3-15334-SP3		SP3

12_SPL03

SHIP NO.	SPARE PARTS LIST FOR	USE	SETS PER VESSEL
HHI: 1630 1631 1671 1672 1699 1700 1701 1733	STARTER	BOW THRUSTER	

ITEM NO	NAME OF PART	OUTLINE	QUANTITY			REMARKS	
			WORKING PER SET	WORKING PER VESS	SPARE		BOX NO
40	SPARE PART BOX	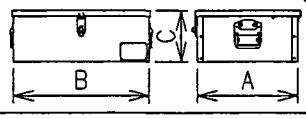 STEEL BOX PAINT 7.5Y9/6			2		

NO	JIS NO	A	B	C
#1	12-10	150	200	100
#2	23-20	200	350	200
#3	44-30	400	400	300
#5	48-15	400	800	150
#6		500	500	500

TAIYO ELECTRIC CO., LTD.

TITLE	DRAW.NO.		SHEET NO.
SPARE PARTS LIST	G3-15334-SP4		SP4

交流電磁接触器予備品一覧表(620F形)
SPARE PARTS LIST

No.	・品　名 (PARTS NAME)	略　図 (SKETCH)	部品番号 (PARTS No.)	数量／台 'Qs／UNIT
1.	固定アークコンタクト (FIXED ARC CONTACT)	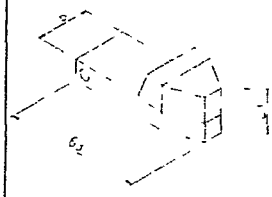	MF4－01－051	3
2.	可動アークコンタクト (MOVABLE ARC CONTACT)	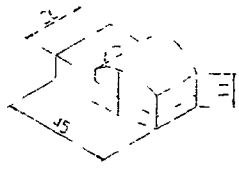	MF4－01－054	3
3.	投入コイル (CLOSING COIL)	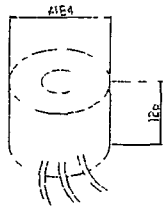	~~MF4－02－1217A (AC100／110V)~~ MF4－02－135B (AC200／220V)	1
4.	マイクロスイッチ (MICRO SWITCH)	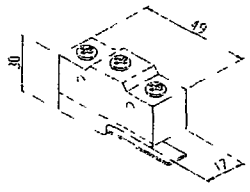	X-5GW55-B30	1
5.	補助開閉器 (AUXILIARY SWITCH)	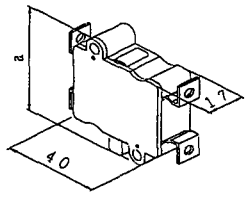	~~SY－C~~ (a寸法 48)	~~1~~ (AUX 2a2bの場合、不要)
			LY－C (a寸法 56)	2
6.	主接触バネ (MAIN CONTACT SPRING)	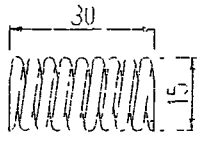	MF4－02－115A	18
7.	補助接触バネ (SUBSIDIARY SPRING)	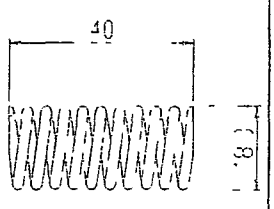	MF4－01－156A	6
8.	遮断バネ (INTERRUPTING SPRING)	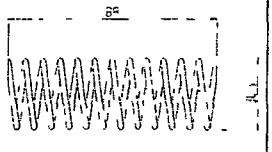	MF4－01－018	2

Remark : Parts on this sheet for STERN thruster starter are packed in parts box for BOW thruster starter.

SP5

KAWASAKI

TEST AND INSPECTION REPORT

OF

BOW THRUSTER
KAWASAKI KT-157B3 TYPE

FOR

HYUNDAI HEAVY INDUSTRIES CO.,LTD
S.NO. H-1630

DELIVERY		ORDER No. 31KB068	KAWASAKI HEAVY INDUSTRIES, LTD. MACHINERY DIVISION QUALITY ASSURANCE DEPARTMENT INSPECTION SECTION
推進機設計	ヤ	NOTES	
1－2班	1		
		REVISION	SENIORMANAGER
			MANAGER A. Sakio
生産管理	原		ASSISTANT MANAGER K. Yamaguchi
計	2		CHECKED BY
ISSUE		DATE September 26,2005	DRAWING No. IR-2005-1189

(6 SHEETS COVER INC.)

CONTENTS

No.	ARTICLE	INS.ITEM	PAGE
1.	Tube & Gear Case	Dimension	1
2.	Shafting Assembly	Clearance	2
3.	Propeller Assembly	Clearance	3
4.	KT-157B3 Type Bow Thruster	Shop test	4

検　査　成　績

RESULT OF INSPECTION

成績表番号 Sheet No.

送付先 / ご注文主	製修番号 Job No	注文主 Customer	図面番号 Draw No.	材質 Material
	31KB068			

N K / L R / A B	品名 Article	個数 No of piece	検査場所 Place of Ins.
	KT-157B3 Bow Thruster Tube & Gear case	1	KHI Kobe Works

N V / B V	検査事項 Inspect. Item	テストマーク Test mark
	Measurement of Dimension	

設計 / 工務	査定 Decision	検査日付 Date of Ins.
	合格 (ACCEPT)	May.06, 2005

単位 Unit. mm

Machine No. : 3426　　Port ~~Starboard~~

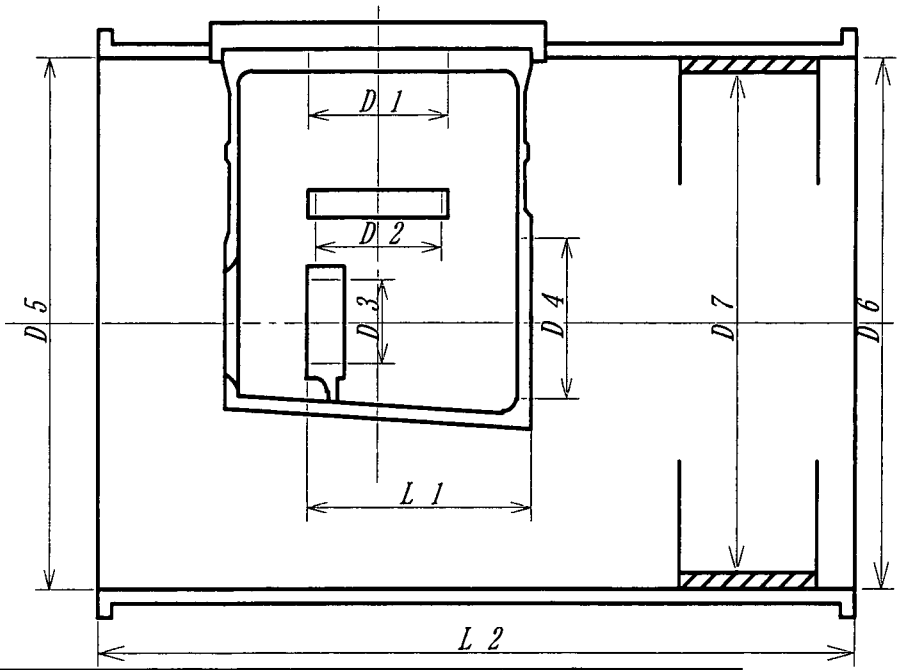

Standard	+0.081 0 φ295	+0.052 0 φ290	+0.052 0 φ260	+0.125 0 φ754	±4.5 φ2316	
Position	D1	D2	D3	D4	D5	D6
X	+0.040	+0.040	+0.020	+0.100	-2.0	+4.0
Y	+0.030	+0.030	+0.010	+0.090	+4.0	+2.0

Standard	±4.5 φ2304	±0.2 485	1880
Position	D7	L1	L2
X	+4.0		
Y	+4.0	±0	+2.0

検査	1 班	2 班	3 班	4 班		控	計

承認	審査	作成
		T.Yamashita

検査員 INSPECTOR TO　　川崎重工業株式会社　神戸工場 KAWASAKI HEAVY INDUSTRIES, LTD. KOBE

検　査　成　績
RESULT OF INSPECTION

成績表番号 Sheet No.

送付先 / ご注文主	製修番号 Job No.	注文主	図面番号	材質
	31KB068	Customer	Draw. No.	Material
N K / L R / A B	品名 Article	KT-157B3 Bow Thruster Shafting Assembly	個数 No. of piece: 1	検査場所 Place of Ins.: KHI Kobe Works
N V / B V	検査事項 Inspect. Item	Clearance Check	ﾃｽﾄﾏｰｸ Test mark	
設計 / 工務	査定 Decision	合格 (ACCEPT)	検査日付 Date of Ins.	May.06, 2005

単位 Unit. mm

Machine No. : 3426　　Port ~~Starboard~~

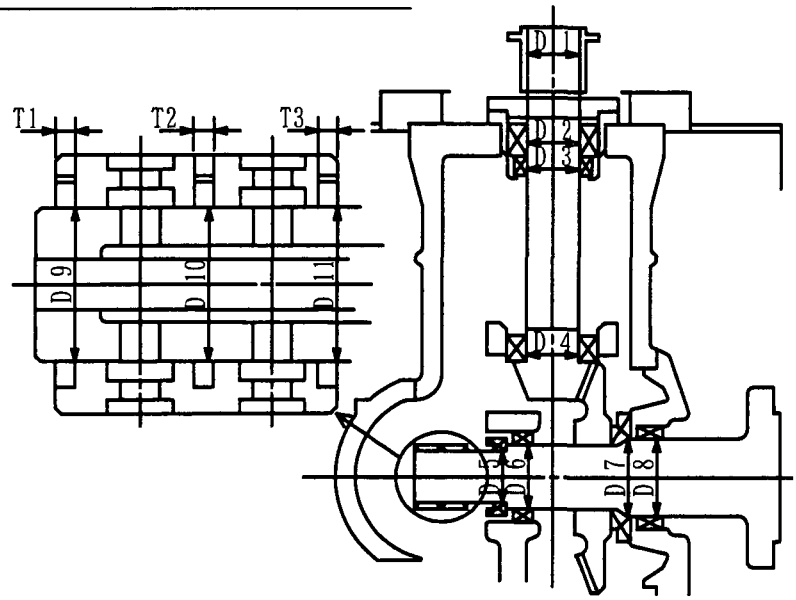

検査	Standard	φ119	φ130	φ130	φ160	φ130	φ170
1班	Clearance(-)	(-)0.022～	(-)0.025～	(+)0.027～	(+)0.043～	(-)0.025～	(+)0.043～
2班	Shrinkage(+)	(+)0.035	(+)0.025	(+)0.077	(+)0.093	(+)0.025	(+)0.093
3班	Position	D1	D2	D3	D4	D5	D6
4班	Hole	+0.010	-0.010	-0.010	-0.010	-0.010	-0.010
	Shaft	+0.020	-0.020	+0.030	+0.045	-0.015	+0.065
控	Clearance(-) Shrinkage(+)	(+)0.010	(-)0.010	(+)0.040	(+)0.055	(-)0.005	(+)0.075
計							

Standard	φ200	φ220	φ80			11		
Clearance(-) Shrinkage(+)	(-)0.029～ (+)0.030	(+)0.050～ (+)0.109	(-)0.020～(-)0.045			(-)0.10～(-)0.20		
Position	D7	D8	D9	D10	D11	T1	T2	T3
Hole	-0.010	-0.010	+0.030	+0.040	+0.030	+0.06	+0.08	+0.07
Shaft	-0.005	+0.075	-0.010	-0.005	-0.010	-0.07	-0.06	-0.05
Clearance(-) Shrinkage(+)	(+)0.005	(+)0.085	(-)0.040	(-)0.045	(-)0.040	(-)0.13	(-)0.14	(-)0.12

承認

審査

T.Yamashita 作成

検査員 INSPECTOR TO　　川崎重工業株式会社　神戸工場 KAWASAKI HEAVY INDUSTRIES, LTD. KOBE

検　査　成　績

RESULT OF INSPECTION

成績表番号 Sheet No.

送付先 / ご注文主	製修番号 Job No.	注文主	図面番号	材質
	31KB068	Customer	Draw. No.	Material
N K / L R / A B	品名 Article	KT-157B3 Bow Thruster Propeller Assembly	個数 No of piece: 1	検査場所 Place of Ins.: KHI Kobe Works
N V / B V	検査事項 Inspect. Item	Clearance Check	ﾃｽﾄﾏｰｸ Test mark	
設計 / 工務	査定 Decision	合格 (ACCEPT)	検査日付 Date of Ins.	May.06, 2005

単位 Unit. mm

Machine No. : 3426　　Port ~~Starboard~~

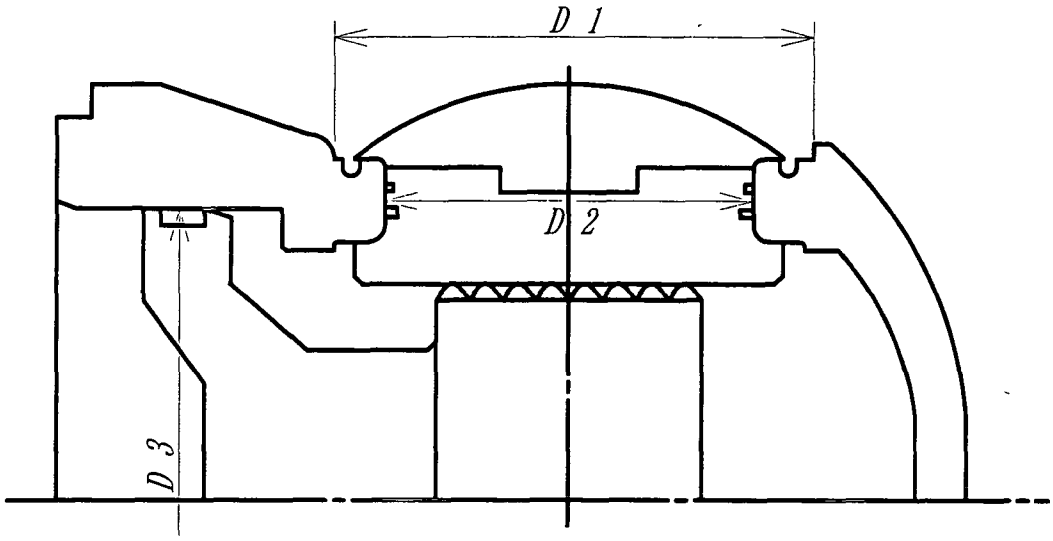

No.	Standard	φ319 clearance 0.4～ 1.6		φ245 clearance 0.160～ 0.246		φ425 clearance 0.180～ 0.283	
	Position	D1		D2		D3	
	Direction	X	Y	X	Y	X	Y
1	Hole	+0.1	+0.1	+0.040	+0.030	+0.050	+0.055
	Shaft	-1.0	-1.0	-0.170	-0.170	-0.200	-0.200
	Clearance	1.1	1.1	0.210	0.200	0.250	0.255
2	Hole	+0.1	+0.1	+0.040	+0.030		
	Shaft	-1.0	-1.0	-0.190	-0.190		
	Clearance	1.1	1.1	0.230	0.220		
3	Hole	+0.1	+0.1	+0.030	+0.020		
	Shaft	-1.0	-1.0	-0.180	-0.180		
	Clearance	1.1	1.1	0.210	0.200		
4	Hole	+0.1	+0.1	+0.035	+0.025		
	Shaft	-1.0	-1.0	-0.180	-0.180		
	Clearance	1.1	1.1	0.215	0.205		

検査 1班 / 2班 / 3班 / 4班 / 控 / 計

承認 / 審査 / T.Yamashita 作成

検査員 INSPECTOR TO　　川崎重工業株式会社　神戸工場 KAWASAKI HEAVY INDUSTRIES, LTD. KOBE

検　査　成　績
RESULT OF INSPECTION

製修番号 / Job No	注文主 / Customer	図面番号 / Draw No	材質 / Material
31KB068		———	———

品名 / Article	個数 / No of piece	検査場所 / Place of Ins
KT- 157 B3 type BOW Thruster	1	神戸工場 Kobe works

検査事項 / Inspect Item	テストマーク / Test mark
Shop test	———

査定 / Decision	検査日付 / Date of Ins
合格 (ACCEPT)	MAY. 6th 2005

M. No. 3426

(1) Confirmation of movement of blade·····Result : Good

(2) Calibration of blade angle indicators·····Result : Good

(3) Confirmation test of neutral position·····Result : ——

(4) Confirmation test of maximum blade angle·····Result : ——

(5) Pitch operation test·····Result : Good

Designed maximum blade angle : 18.8°　Room temp.: 22 °C　Oil temp.: 30 °C

Control system			Time		Pressure			Motor for oil service pump		
Port max. 18.8° / Neutral 0° / Starboard max. 18.8°	Item	No.	Finish of control	Finish of pitch changing	Delivery pressure oil service pump	Port max. for pitch control	Starboard max. for pitch control	Voltage	Electric current	Input
			sec		MPa			V	A	KW
	①			6.1	2.2	1.8	0.9	440	5.2	3.5
	②			12.3	2.1	1.0	1.6	440	5.2	3.5
	③			6.2	2.2	1.8	0.9	440	5.2	3.5
	④			6.2	2.1	1.0	1.6	440	5.2	3.5
	⑤			12.3	2.3	1.8	0.9	440	5.2	3.5
	⑥			6.1	2.2	1.0	1.7	440	5.2	3.5

(6) Manual operation test·····Result Good

(7) Hyd. Piping system press Test 6 75 MPa·····Result : Good

※ Remarks : No remote control system was used

送付先 / ご注文主 / N K / L R / A B / N V / B V / 設計 / 2サイクル / 工務 / 生技 / 工作 / 組立 / 原動機工事 / 1-1 班 / 1-2 班 / -1 班 / 2-2 班 / 査 / 控 / 計

承認 / 審査 / T. Matsuzaki 作成

検査員 INSPECTOR M. Yamauchi 6/5/05

川崎重工業株式会社　神戸工場
KAWASAKI HEAVY INDUSTRIES, LTD KOBE